Environmental Review for Activity/Project that is Categorically Excluded Subject to Section 58.5

Pursuant to 24 CFR 58.35(a)

Project Information

Project Name: Revitalization of Plaza Luis Muñoz Rivera in the Urban Center of Arecibo (PR-CRP-000771)

Responsible Entity: Puerto Rico Department of Housing (PRDOH)

Grant Recipient (if different than Responsible Entity): Municipality of Arecibo

State/Local Identifier: Puerto Rico / Arecibo

Preparer: Angel Garcia PE, Sr. Environmental Engineer at AG Environmental PSC (angel@agepr.com)

Certifying Officer Name and Title:

Aldo A. Rivera Vázquez - Director, Permits and Environmental Compliance Division
Angel G. López Guzmán - Deputy Director, Permits and Environmental Compliance Division
Maria T. Torres-Bregón - Permits and Environmental Compliance Manager
Sally Z. Acevedo-Cosme - Permits and Environmental Compliance Specialist
Limary Vélez Marrero - Permits and Environmental Compliance Specialist
Ivelisse Lorenzo Torres - Permits and Environmental Compliance Specialist
Mónica Machuca Rios - Permits and Environmental Compliance Specialist
Janette I. Cambrelen - Permits and Environmental Compliance Specialist
Santa Ramírez Lebrón - Permits and Environmental Compliance Specialist
Abdul Feliciano Plaza - Permits and Environmental Compliance Specialist
Pedro A. De León Rodríguez - Permits and Environmental Compliance Specialist
Javier Mercado Barrera - Permits and Environmental Compliance Specialist
Priscilla Toro Rivera - Permits and Environmental Compliance Specialist

Consultant (if applicable): AG Environmental PSC

Direct Comments to: Puerto Rico Department of Housing at comentariosambiental@vivienda.pr.gov

Project Location: Pueblo Ward, Arecibo, PR 00612, (18.471980°, -66.715910°), Cadastral # 012-086-139-01

Description of the Proposed Project [24 CFR 50.12 & 58.32]**:** The Municipality of Arecibo proposes the revitalization of its town square, where the main objective is the reorganization of the space creating a comfortable environment that significantly increases its functionality. A project location map can be found in **Appendix A**. Proposed improvements include new flooring, redistribution of open spaces, new lighting poles, improvements of the surrounding sidewalks in compliance with American with Disabilities Act (ADA) regulations, and installation of new park furniture, among other improvements.

The existing Plaza and peripheral sidewalks will be renovated with new flooring that complies with Americans with Disabilities Act (ADA) and can accommodate vehicular traffic from service vehicles and equipment. The existing park benches with be replaced with more durable and resilient seating areas, and the existing ramps and stair accesses will be improved. Lighting/lamps will be replaced with resilient powered lightning. Some solar lighting will be considered, although not on the main lighting system. New and larger trash cans will be installed throughout the plaza. Additionally, an electrical and mechanical room will be constructed on the southwest corner of the plaza, above the existing mechanical room. This alternative would require raising the ceiling of the existing mechanical room to the minimum required by the current building code (7 ft). The increased ceiling of the mechanical room would project into the plaza, with height below the precast railing and hidden with vegetation (live Spanish laurel hedge), and a bench would surround the new volume. Although this is not reflected in the 90% plans from July 2024, this alternative was discussed and agreed upon in a meeting between the Municipality, GM, and PM on January 21, 2025, and will be reflected in the final design plans.

The existing green planting areas will be improved and expanded, including new shade trees, landscaping, and widening of the existing planting surrounding the central obelisk. The existing fountain will be redesigned and improved with the installation of a synchronized lighting system and water jets, and the location of the existing pumps will be moved closer to the fountain area. The existing large gazebo will be removed to create a larger area where activities can install their temporary equipment (such as a large movable stage). This area will also serve as a large gathering space for activities not requiring such equipment. Electrical, water and other “rough in” will be provided and the existing electrical, plumbing and drainage infrastructure will be improved. New poles/monoliths with informational QR codes, a plaque, and signage with historical information will be installed. The original Reina Isabel II statue will be restored and installed in a base surrounded by a garden. The existing concrete and steel knee wall surrounding the plaza will be removed and reinstalled using a design that is reminiscent of the original plaza of 1890 to 1898. New small canopies will be installed in areas around the plaza to provide shaded seating. Project drawings can be found in **Appendix B**.

Funding Information

Grant Number	HUD Program	Funding Amount
B-17-DM-72-0001; B-18-DP-72-0001; B-19-DP-78-0002; B-18-DE-72-0001	Community Development Block Grant – Disaster Recovery (CDBG-DR)	$11,938,162,230

Estimated Total HUD Funded Amount: $3,731,285.27

Estimated Total Project Cost (HUD and non-HUD funds) [24 CFR 58.32(d)]: $4,049,793.17

Line	Item	Amount
A	90% design cost estimate	$4,049,793.17
B	FEMA funds - obligated	$318,507.90
C=A-B	Estimated Total HUD funded amount	$3,731,285.27

Compliance with 24 CFR 50.4, 58.5, and 58.6 Laws and Authorities

Record below the compliance or conformance determinations for each statute, executive order, or regulation. Provide credible, traceable, and supportive source documentation for each authority. Where applicable, complete the necessary reviews or consultations and obtain or note applicable permits of approvals. Clearly note citations, dates/names/titles of contacts, and page references. Attach additional documentation as appropriate.

Compliance Factors: Statutes, Executive Orders, and Regulations listed at 24 CFR §58.5 and §58.6	**Are formal compliance steps or mitigation required?**	**Compliance Determinations**
STATUTES, EXECUTIVE ORDERS, AND REGULATIONS LISTED AT 24 CFR 50.4 and 58.6		
Airport Hazards 24 CFR Part 51 Subpart D	Yes ☐ No ☒	The project is not located within an FAA-designated civilian airport Runway Protection Zone (RPZ), or Accident Potential Zone (APZ). The project is not within 15,000 feet of a military airport nor 2,500 feet of a civilian airport. The nearest civil airport is the Rafael Hernandez Airport (BQN), located in Aguadilla and is approximately 143,680 feet west from the project, measured from the project boundary to the runway. The nearest military airport is Luis Muñoz Marín (SJU) Joint Military Airfield Muñiz Air National Guard, approximately 253,608 feet east from the project site, measured from the project boundary to the runway. Therefore, the project is in compliance with 24 C.F.R. Part 51, Subpart D. See Airport Hazards documentation in **Appendix C**.
Coastal Barrier Resources Coastal Barrier Resources Act, as amended by the Coastal Barrier	Yes ☐ No ☒	The proposed project is not located within a Coastal Barrier Resources Unit. The CBRS Unit closest to the Project is PR-81, [Puerto de Arecibo], located to the

Improvement Act of 1990 [16 USC 3501]		east of the project site at an approximate distance of 0.54 miles (2,834 feet). Therefore, the Project is in compliance with the Coastal Barrier Resources Act (CBRA). See Coastal Barrier Resources documentation in **Appendix D**.
Flood Insurance Flood Disaster Protection Act of 1973 and National Flood Insurance Reform Act of 1994 [42 USC 4001-4128 and 42 USC 5154a]	Yes ☐ No ☒	The project site is located in Zone X, outside the Special Flood Hazard Area (SFHA)/ 100-year floodplain as designated in FIRM Panel number 72000C0230J, effective date: 11/18/2009. Therefore, the project does not require flood insurance in accordance with the Flood Disaster Protection Act of 1973 and the National Flood Insurance Reform Act of 1994. Documentation demonstrating the location outside the SFHA has been included. Therefore, the project is in compliance with 42 U.S.C. §§ 4001-4128 and 42 U.S.C. § 5154a. See Flood Insurance documentation in **Appendix E**.
STATUTES, EXECUTIVE ORDERS, AND REGULATIONS LISTED AT 24 CFR 50.4 & 58.5		
Clean Air Clean Air Act, as amended, particularly section 176(c) & (d); 40 CFR Parts 6, 51, 93	Yes ☐ No ☒	The project is located in the Municipality of Arecibo, which is designated as a nonattainment area for lead (2008) according to the U.S. Environmental Protection Agency's (USEPA) Online Green Book on Nonattainment Areas for Criteria Pollutants as per data obtained on 7/31/2025. However, the proposed project is limited to improvements to an existing outdoor public plaza and will not result in emissions exceeding de minimis levels. Emissions from construction activities would be incidental to construction and limited to the duration of the construction period. Implementation of construction related air pollution controls (fugitive dust control and heavy equipment emissions controls) would reduce potential impacts. These temporary impacts are not significant and would not have an adverse impact on the residential, institutional, and commercial properties located near the project area. Therefore, the proposed project complies with the National Attaining Air Quality Standards (NAAQS). Due to its scope, no impact on air quality will be expected during its construction and operation. The proposed action complies with the Clean Air Act and 40 C.F.R. Parts 6, 51 and 93. No formal compliance steps or mitigation are required.

		See Clean Air documentation in **Appendix F**.
Coastal Zone Management Coastal Zone Management Act, sections 307(c) & (d)	Yes ☐ No ☒	The project is located within the coastal zone of Puerto Rico, as defined by the State's Coastal Zone Management Program (CZMP). The project activities include new flooring, redistribution of open spaces, new lighting poles, improvements of the surrounding sidewalks in compliance with American with Disabilities Act (ADA) regulations, and installation of new park furniture, among other improvements. A consistency determination was obtained from the PRPB, confirming that the project is consistent with the State's CZMP on 7/23/2025. This determination was based on a thorough review of the Project's potential impacts on coastal resources and uses. The project does not require mitigation measures to ensure minimal impact on coastal resources. All relevant documentation, including the consistency, is included in the Environmental Review Record (ERR). Therefore, the project is in compliance with Section 307(c) and (d) of the Coastal Zone Management Act. See Coastal Zone Management documentation in **Appendix G**.
Contamination and Toxic Substances 24 CFR Part 50.3(i) & 58.5(i)(2)	Yes ☒ No ☐	The subject property is an existing public plaza. The plaza is located in an urban setting and is surrounded by urban residences and businesses including restaurants and clothing stores. The subject property has existed as a plaza for hundreds of years, as shown in city plans dating back to the 18th century. The site was evaluated for its proximity to known hazardous sites, including those listed on the EPA Superfund National Priorities List, state equivalent lists, and sites within 3,000 feet of a toxic or solid waste landfill. Within a 3,000-feet radius measured from the Project perimeter, sixteen (16) locations are identified in NEPAssist with contamination and toxic substances. Enforcement and Compliance History Online (ECHO) states that the compliance status is No Violation Identified for all sixteen sites. There are no Superfund or Brownfield sites within one mile of the project location. A field inspection was conducted on 11/1/2023 by AG Environmental PSC personnel. No evidence of soil contamination, water contamination, or hazardous materials were found on site.

		Environmental lead-based paint (LBP) and asbestos-containing materials (ACM) inspections were conducted at the proposed project location on 10/5/2023 by CMC Environmental Consultants. The ACM inspection concluded that no ACM is present in the project area. The LBP inspection found positive LBP on the plaza stair handrails along the five (5) staircases found along the eastern, western, and southern perimeter of the plaza. These stair handrails will be removed as part of the project scope of work and therefore, abatement will be achieved through the removal of LBP-positive components during construction. The project is limited to the rehabilitation of a public outdoor plaza. The proposed project does not involve structures that are occupied or are intended to be occupied at least four (4) hours a day, as defined on page 3 of HUD Notice CPD-23-103 (see **Appendix H**). Therefore, HUD radon requirements are not applicable and the project is exempt from radon testing. If any hazardous materials are encountered during construction, the contractor will notify the project owner before the continuation of work. Therefore, the project is in compliance with 24 C.F.R. § 50.3(i) and § 58.5(i)(2). See Contamination and Toxic Substances documentation in **Appendix H** and Field Inspection Report in **Appendix I**.
Endangered Species Endangered Species Act of 1973, particularly section 7; 50 CFR Part 402	Yes ☐ No ☒	PRDOH, as the Responsible Entity, is conducting due diligence to assess Federally Listed Threatened and Endangered Species, in accordance with the Endangered Species Act Section 7. This involves consulting the U.S. Fish and Wildlife Service (USFWS). A review of the USFWS IPaC tool identified the potential presence of *Chilabothrus inornatus* (Puerto Rican Boa) and *Trichechus manatus* (West Indian Manatee). The USFWS has not made a critical habitat designation for the Puerto Rican Boa. The USFWS has designated a final critical habitat for the West Indian Manatee, but there is no habitat or critical habitat within or near the proposed project area. Furthermore, the proposed project is within the existing developed footprint of the plaza. The project meets the following criteria of USFWS Blanket Clearance Letter:

		2. “Construction of gutters and sidewalks along existing roads.” 8. “Improvements to existing recreational facilities, including the installation of roofs to existing basketball courts, provided that the lighting associated to the facilities are not visible directly or indirectly from the beach.” A Blanket Clearance Letter was submitted to the agency for determination, which identified the proposed project’s range within the habitat of federally listed species and critical habitats on 12/2/2024. The agency responded on 12/4/2024 with the determination that the proposed project qualifies for the blanket clearance letter and is not likely to adversely affect federally listed species. If a Puerto Rican Boa is found in the Project action site, work shall cease until the Boa moves off on its own. If the Boa does not move off, the CM shall contact the Puerto Rico Department of Natural and Environmental Resources and ask for them to relocate the Boa. Therefore, the project is in compliance with the Endangered Species Act of 1973, particularly section 7; 50 C.F.R. Part 402. See Endangered Species documentation in **Appendix J**.
Explosive and Flammable Hazards 24 CFR Part 51 Subpart C	Yes ☐ No ☒	The proposed project does not include development construction, rehabilitation that will increase residential densities, or conversion. Therefore, the Project is in compliance with the 24 C.F.R. Part 51 Subpart C.
Farmlands Protection Farmland Protection Policy Act of 1981, particularly sections 1504(b) and 1541; 7 CFR Part 658	Yes ☐ No ☒	According to the USDA Farmland Classification Map, there is no prime or unique farmland on the project site, as identified by NRCS. The project area is already developed as an existing public outdoor plaza and therefore, does not involve new construction, acquisition of undeveloped land, or conversion of land use. Additionally, the proposed project is located in the urban center of the municipality of Arecibo. The Farmland Protection Policy Act does not apply to projects already in or committed to urban development. Therefore, the project is in compliance with the Farmland Protection Policy Act of 1981, particularly sections 1504(b) and 1541; 7 C.F.R. Part 658.

		See Farmlands Protection documentation in **Appendix K**.
Floodplain Management Executive Order 11988, particularly section 2(a); 24 CFR Part 55	Yes ☐ No ☒	The project is not located within the floodplain. According to the Advisory Base Flood Elevation (ABFE) map issued 10/18/2024, the project is located in Zone X. According to the Flood Insurance Rate Map (FIRM), Panel number 72000C0230J, effective 11/18/2009, the project is in Zone X, or the Area of Minimal Flood Hazard. The Preliminary FIRM Map is not available for the project area. The project will not undergo activities within a floodplain. Therefore, the Project is in compliance with Executive Order 11988. See Floodplain Management documentation in **Appendix L**.
Historic Preservation National Historic Preservation Act of 1966, particularly sections 106 and 110; 36 CFR Part 800	Yes ☒ No ☐	The project was assessed for its potential effects on identified historic properties. This assessment considered direct, indirect, and cumulative impacts on the integrity and significance of the properties. SOI Qualified Archaeologists Dylan Zedaker, MA, and Aramis Font Negrón, MA; and SOI-Qualified Architect/Architectural Historians Richard Starzak, MA, Berenice Sueiro-Vázquez, B Arch, Arleen Pabón-Charneco, PhD JD and Antonio Pontón González, MA, conducted historical archaeological and architectural evaluations for the property. The evaluation concluded that project actions will not affect the historic properties that compose the Area of Potential Effect (APE). Based on this finding, SHPO consultation was initiated on 7/18/2025 for review and concurrence with a determination of No Adverse Effect. On 8/14/2025, SHPO concurred with the determination that the project will have no adverse effect on historic properties with the following established conditions: 1. Alternative 3 was chosen for the new fountain pumps and electrical control room as discussed during the January 21, 2025, meeting between the Municipality, GM, and PM. Alternative 3 consists of locating the proposed electrical and mechanical room on the southwest corner of the plaza, above the existing mechanical room.

		2. To address any potential impacts to archaeological resources within the Direct APE, archaeological monitoring by an SOI-Qualified archaeologist is required for all work requiring ground disturbance such as excavation and demolition. An archaeological monitoring plan shall be submitted by an SOI-Qualified archaeologist to the PRSHPO and approved prior to any work being performed. 3. To avoid damage to architectural historic properties, a special barrier must be constructed to protect the "Pluma de Muñoz Rivera monolith statue" during construction. 4. To avoid damage to architectural objects, specific handling instructions must be added to the technical specifications of the project, for the restoration, transportation and installation of the Reina Isabel II and the two Lion Statues. On 9/12/2025, an Archaeological Monitoring Plan was submitted to SHPO. In a letter dated 9/23/2025, the State Historic Preservation Officer Carlos A. Rubio Cancela approved the plan and asked that SHPO be notified of the archaeological monitoring start date 48 hours prior to the initiation of work. Therefore, the project is in compliance with the National Historic Preservation Act of 1966, particularly sections 106 and 110; 36 C.F.R. Part 800. See Historic Preservation documentation in **Appendix M**.
Noise Abatement and Control Noise Control Act of 1972, as amended by the Quiet Communities Act of 1978; 24 CFR Part 51 Subpart B	Yes ☐ No ☒	The project does not involve the development of noise-sensitive uses such as housing, schools, or healthcare facilities. The scope of work consists of rehabilitation and improvements within an existing public plaza, which is already subject to typical urban noise levels. The proposed project will not involve new construction or expansion of the existing plaza footprint. Standard noise best management practices will be used during construction, such as turning off equipment and vehicles when not in use and limiting noisy activities to specific hours to reduce disruption. The proposed project will comply with all applicable noise ordinances.

		The project site is not located within an FAA-designated airport noise exposure zone, nor is it within the immediate vicinity of major highways or railway corridors. Temporary noise impacts related to construction activities are expected but will be limited to standard daytime hours. Therefore, the project is in compliance with the Noise Control Act of 1972, as amended by the Quiet Communities Act of 1978; 24 C.F.R. Part 51, Subpart B.
Sole Source Aquifers Safe Drinking Water Act of 1974, as amended, particularly section 1424(e); 40 CFR Part 149	Yes ☐ No ☒	There are no sole source aquifers in Puerto Rico. Therefore, the proposed project site is not located within a sole source aquifer, nor will it directly or indirectly impact one. The nearest sole source aquifer is the Biscayne Aquifer SSA, located in the state of Florida in the continental United States. This SSA is located approximately 991.62 miles from the project site. Therefore, the project is in compliance with the Safe Drinking Water Act of 1974, as amended, particularly section 1424(e); 40 C.F.R. Part 149. See Sole Source Aquifer documentation in **Appendix N**.
Wetlands Protection Executive Order 11990, particularly sections 2 and 5	Yes ☐ No ☒	According to the National Wetland Inventory, the proposed project is not located within or adjacent to any wetlands. The nearest wetland is approximately 391.7 feet from the project site. Additionally, the project area is already developed and no work is proposed outside of the existing plaza. Based on these findings, no mitigation measures or implementation of the 8-Step Process are required. All findings are consistent with the regulatory requirements of 24 CFR § 55.9. The proposed project complies with the requirements of Executive Order 11990, particularly sections 2 and 5. See Wetlands Protection documentation in **Appendix O**.
Wild and Scenic Rivers Wild and Scenic Rivers Act of 1968, particularly section 7(b) and (c)	Yes ☐ No ☒	The wild and scenic rivers in Puerto Rico are in the El Yunque National Forest. These rivers include La Mina River, Icacos River, and Mameyes River, with the La Mina River being the closest, approximately 61.89 miles (326,804 feet) east of the project site. Therefore, the project is in compliance with Wild and Scenic Rivers Act of 1968, particularly section 7(b) and (c).

		See Wild and Scenic Rivers documentation in **Appendix P**.

Field Inspection (Date and completed by)**:** A field inspection was conducted on 11/1/2023 by AG Environmental PSC personnel. No evidence of soil contamination, water contamination, or hazardous materials were found on site. The field inspection report can be found in **Appendix I**.

Summary of Findings and Conclusions: This project will allow residents, including those with low or moderate income and those with disabilities, to enjoy the Public Plaza for recreation and community integration in a safe and secure place. It will also help to attract visitors from other areas. The project will help increase the commercial and cultural activity of the Municipality of Arecibo.

Because the site was previously impacted, there will be no significant environmental impact due to this action. Furthermore, the area will retain certain previous surfaces and enhanced landscaping features that it lacks today, positively impacting ecological diversity. Therefore, this project will have social, cultural, economic, and environmental benefits. The proposed project will have minimal environmental impact based on a thorough site assessment and planned mitigation measures.

Mitigation Measures and Conditions

Summarize below all mitigation measures adopted by the Responsible Entity to reduce, avoid, or eliminate adverse environmental impacts and to avoid non-compliance or non-conformance with the above-listed authorities and factors. These measures/conditions must be incorporated into project contracts, development agreements, and other relevant documents. The staff responsible for implementing and monitoring mitigation measures should be clearly identified in the mitigation plan.

Law, Authority, or Factor	Mitigation Measure
Clean Air	Construction related air pollution controls will be implemented to control fugitive dust and heavy equipment emissions and reduce potential impacts.
Contamination and Toxic Substances	If any hazardous materials are encountered during construction, the contractor will notify the project owner before the continuation of work. The LBP inspection conducted on 10/5/2023 identified positive LBP on the plaza stair handrails along the five (5) staircases found along the eastern, western, and southern perimeter of the plaza. These stair handrails will be removed as part of the project scope of work and therefore, abatement will be achieved through the removal of LBP-positive components during construction.

Endangered Species	If a Puerto Rican Boa is found in the Project action site, work shall cease until the Boa moves off on its own. If the Boa does not move off, the CM shall contact the Puerto Rico Department of Natural and Environmental Resources and ask for them to relocate the Boa.
Historic Preservation	On August 14, 2025, SHPO concurred with a determination of No Adverse Effect with the following established conditions: 1. Alternative 3 was chosen for the new fountain pumps and electrical control room as discussed during the January 21, 2025, meeting between the Municipality, GM, and PM. Alternative 3 consists of locating the proposed electrical and mechanical room on the southwest corner of the plaza, above the existing mechanical room. 2. To address any potential impacts to archaeological resources within the Direct APE, archaeological monitoring by an SOI-Qualified archaeologist is required for all work requiring ground disturbance such as excavation and demolition. An archaeological monitoring plan shall be submitted by an SOI-Qualified archaeologist to the PRSHPO and approved prior to any work being performed. 3. To avoid damage to architectural historic properties, a special barrier must be constructed to protect the "Pluma de Muñoz Rivera monolith statue" during construction. 4. To avoid damage to architectural objects, specific handling instructions must be added to the technical specifications of the project, for the restoration, transportation and installation of the Reina Isabel II and the two Lion Statues. The required monitoring plan was subsequently submitted and approved, with SHPO concurrence on September 23, 2025, confirming that the plan is adequate to mitigate potential impacts to cultural resources (see Historic Preservation documentation in **Appendix M**). A qualified professional archaeologist will be present to monitor excavation and other ground-disturbing activities. SHPO will be notified of the archaeological monitoring start date 48 hours prior to the initiation of work. Should any historic or pre-contact archaeological materials or features be encountered, the

	archaeologist will follow the approved protocol, ensuring proper documentation, evaluation, and coordination with SHPO prior to resuming work.

Determination:

- ☐ This categorically excluded activity/project converts to Exempt, per 58.34(a)(12) because there are no circumstances which require compliance with any of the federal laws and authorities cited at §58.5. **Funds may be committed and drawn down after certification of this part** for this (now) EXEMPT project; OR
- ☒ This categorically excluded activity/project cannot convert to Exempt because there are circumstances which require compliance with one or more federal laws and authorities cited at §58.5. Complete consultation/mitigation protocol requirements, **publish NOI/RROF and obtain "Authority to Use Grant Funds"** (HUD 7015.16) per Section 58.70 and 58.71 before committing or drawing down any funds; OR
- ☐ This project is now subject to a full Environmental Assessment according to Part 58 Subpart E due to extraordinary circumstances (Section 58.35(c)).

Preparer Signature: Date: 10/22/2025

Name/Title/Organization: Angel Garcia, PE / Sr. Environmental Engineer / AG Environmental PSC

Certifying Officer Signature: Abdul X. Feliciano Plaza Digitally signed by Abdul X. Feliciano Plaza Date: 2025.10.27 10:35:56 -04'00' Date: 10/27/2025

Name/Title: Abdul X. Feliciano Plaza, Permits and Environmental Specialist

This original, signed document and related supporting material must be retained on file by the Responsible Entity in an Environmental Review Record (ERR) for the activity/project (ref: 24 CFR Part 58.38) and in accordance with recordkeeping requirements for the HUD program(s).

List of Appendices

A	Project Location Map
B	Project Drawings
C	Airport Hazards
D	Coastal Barrier Resources
E	Flood Insurance
F	Clean Air
G	Coastal Zone Management
H	Contamination and Toxic Substances
I	Field Inspection Report
J	Endangered Species
K	Farmland Protection
L	Floodplain Management
M	Historic Preservation
N	Sole Source Aquifers
O	Wetlands Protection
P	Wild and Scenic Rivers

Appendix A:
Project Location Map

PR-CRP-000771 Project Location Map

Address: Pueblo Ward, Arecibo, PR 00612
Coordinates: 18.471980°, -66.715910°

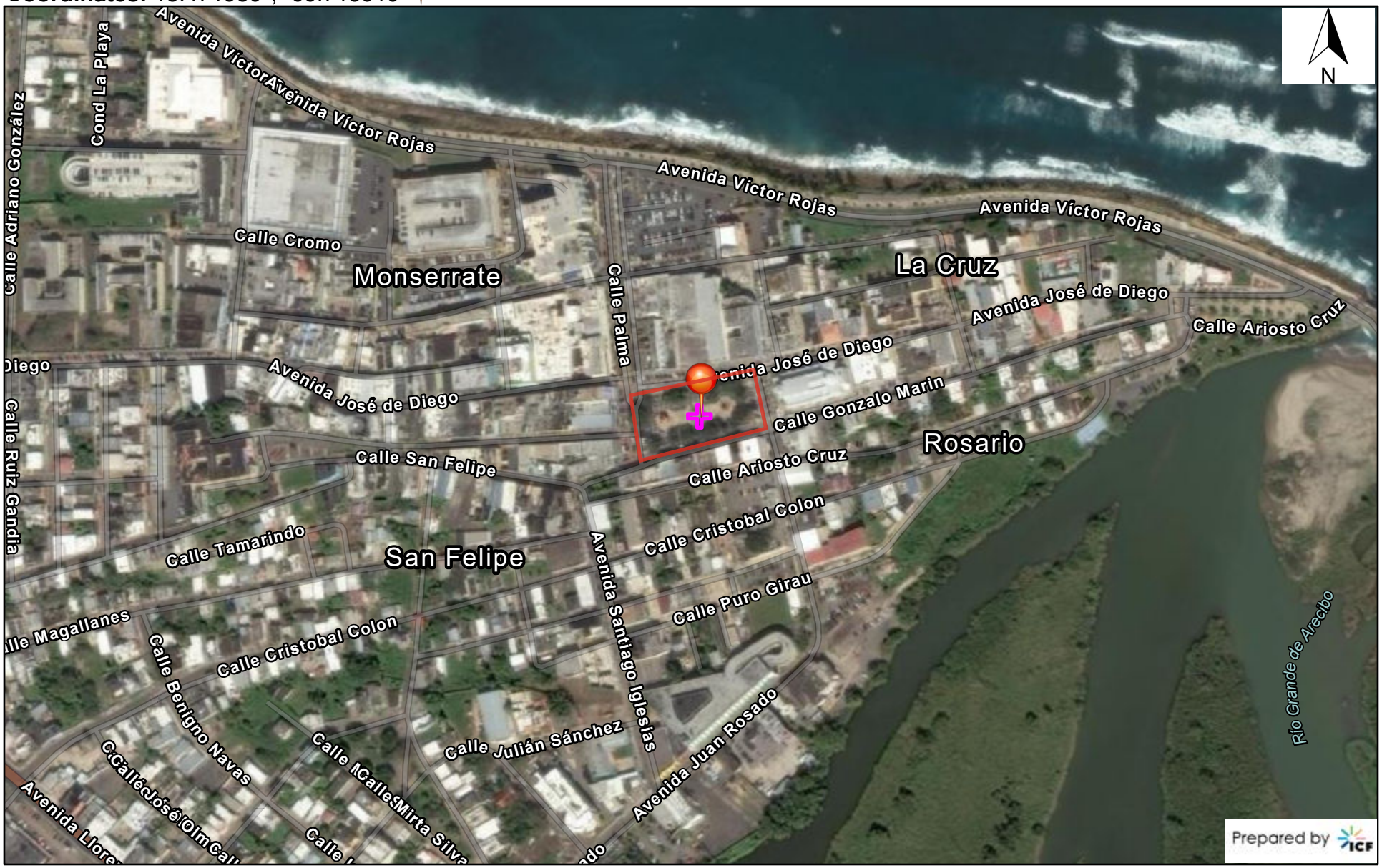

August 13, 2025

Search Result (point)

1:4,514

0 0.04 0.07 0.14 mi

0 0.05 0.1 0.2 km

Sources: Esri, TomTom, Garmin, FAO, NOAA, USGS, (c) OpenStreetMap contributors, and the GIS User Community, Maxar

Source: https://nepassisttool.epa.gov/nepassist/nepamap.aspx

Appendix B:
Project Drawings

DRAWINGS FOR:

REVITALIZATION OF LUIS MUÑOZ RIVERA PLAZA IN URBAN CENTER

ARECIBO, PUERTO RICO

90% DESIGN

IGLESIAS • VAZQUEZ and ASSOCIATES

320 CALLE FORTALEZA SAN JUAN, PUERTO RICO 00901 TEL. 721-4545/ FAX: 722-1184

ENGINEERS • ARCHITECTS • PLANNERS

HONORABLE CARLOS RAMIREZ IRIZARRY

DATE	REVISIONS

LOCATION PLAN

SCALE=1:20,000

LAMBERT COORDINATE: X =170153.4029 Y =270709.8656

INDEX OF DRAWINGS

DWG	DESCRIPTIONS	SHEET
TS-1	TITLE SHEET & LOCATION	1
TS-2	ABBREVIATIONS GENERAL NOTE & LEGEND	2
USI-1	EXISTING SITE PLAN	3
USI-2	EXISTING TOPOGRAPHIC SITE PLAN	4
USI-3	PROPOSED GRADING SITE PLAN	5
USI-4	PROPOSED STAGING PLAN AND TEMPORARY FENCE SITE PLAN	6
SS-1	BORING LOCATION PLAN	7
AD-1	EXISTING AND DEMOLITION PLAZA FLOOR PLAN	8
AD-2	EXISTING AND DEMOLITION EXISTING ELEVATION	9
AD-3	EXISTING AND DEMOLITION PLAZA MISCELLANEOUS DETAILS	10
AD-4	EXISTING AND DEMOLITION PLAZA MISCELLANEOUS DETAILS	11
A-1	PROPOSED ARCHITECTURAL PLAZA SITE PLAN	12
A-2	PROPOSED PLAZA FLOOR PLAN	13
A-3	PROPOSED ELEVATIONS	14
A-4	PROPOSED SECTIONS	15
A-5	PROPOSED PLAZA RAILING PLAN AND SECTIONS	16
A-6	PROPOSED RAILING WALL SECTIONS	17
A-7	PROPOSED TYP. EXISTING STAIR BLOW UP AND RAILING DETAILS	18
A-8	PROPOSED PLAZA MISCELLANEOUS DETAILS	19
A-9	PROPOSED PLAZA MISCELLANEOUS DETAILS	20
A-10	PROPOSED BLOW UP FLOOR PLAN AND SECTIONS REINA ISABEL II	21
A-11	PROPOSED ELEVATION AND SECTION REINA ISABEL II	22
A-12	PROPOSED BLOW UP SCULPTURE FLOOR PLAN AREA ELEVATIONS DETAILS	23
A-13	PROPOSED UP FOUNTAIN FLOOR PLAN AREA ELEVATIONS DETAILS	24
A-14	PROPOSED FLOOR AND ROOF PLANS MECH. AND ELECT. ROOM	25
A-15	PROPOSED ELEVATIONS AND SECTIONS MECH. AND ELECT. ROOM	26
A-16	PROPOSED ROOF PLANS MECH. AND ELECT. ROOM	27
A-17	PROPOSED DOORS AND WINDOWS SCHEDULE	28
A-18	PROPOSED FINISHES SCHEDULES, NOTES AND DETAILS	29
A-19	PROPOSED FLOOR TILES LAYOUT	30
S-1	PROPOSED ELECTRICAL AND MECHANICAL BLDG. FOUNDATION PLAN AND DETAILS	31
S-2	TYPICAL STRUCTURAL SECTIONS AND DETAILS	32
S-3	PROPOSED STRUCTURAL ROOF PLAN	33
S-4	PROPOSED FOUNTAIN FOUNDATION PLAN	34
S-5	ISABEL II STATUE & LIONS MONUMENTS AREA STRUCTURAL LAYOUT PLAN	35
S-5	CONCRETE RAILINGS PLAN, ELEV., STRUCTURAL SECTIONS AND DETAILS	36
PD-1	EXISTING AND DEMOLITION PLAZA PLUMBING DISTRIBUTION PLAN	37
P-1	PLUMBING GENERAL NOTES AND DETAILS	38
P-2	PROPOSED PLAZA PLUMBING DISTRIBUTION PLAN	39
P-3	PROPOSED PLAZA PLUMBING DIST. ENLARGE PLAN AND DETAIL	40
PE-1	EXISTING AND DEMOLITION PLAZA—ELECTRICAL INSTALLATION	41
E-1	PLAZA FLOOR PLAN ELECTRICAL INSTALLATION	42
E-2	ELECT. & MECH. ROOMS, KIOSK & FOUNTAIN AREA BLOW-UPS	43
E-3	ELECT. & MECH. ROOMS, KIOSK & FOUNTAIN AREA BLOW-UPS	44
E-4	NOTES, LEGEND & DETAIL	45
E-5	LUMINARY & TIME SWITCHES SCHEDULES	46

N:\Proj\ARECIBO\903 PLAZA ARECIBO\DWG'S\001-903TS-1.dwg

TS-1

ABBREVIATIONS

ABUT.	Abutment	J.B.	Junction Box	W.M.	Water Main
A.D.	Algebraic Difference in Grades, Percent	K	Vertical Curvature Design Control	W.MTR.	Water Meter
AGG.	Aggregate	LT.	Left	W.V.	Water Valve
AH.	Ahead	L.	Length of Curve	W.W.	Wing Wall
AL.	Aluminum	L.P.	Light Pole	W.M.F.	Wire Mesh Fence
ASB.	Asbestos	M.B.	Mail Box	W.I.	Wrought Iron
ASPH.	Asphalt	M.L.	Main Line		
BK.	Back	M.H.	Manhole		
B.L.	Base line	MAX.	Maximum		
B.W.F.	Barbed Wire Fence	M.H.W.	Mean High Water		
B.V	Bearing Value	M.S.L.	Mean Sea Level		
B & S	Bell and Spigot	MIN.	Minimum		
B.M.	Bench Mark	MON.	Monument		
BIT. CONC.	Bituminous Concrete	O.C.	On Centers		
B.C.C.M.P.	Bituminous Coated Corrugated	O.D.	Outside Diameter		
BOTT., B.	BOTTOM	O. TO O.	Outside to Outside		
BLDG.	Building	P.P.	Power Pole		
C.I.	Cast Iron	PCC.	Point of Compound Curvature		
C.I.P.	Cast Iron Pipe	P.C.C.	Portland Cement Concrete		
C.B.	Catch Basin	PC	Point of Curvature		
C.L.	Center line	P.G.	Proposed Grade		
C. TO C., C.C.	Center to Center	PI	Point of Intersection		
CTD.	Coated	PL.	PLATE		
COL.	Column	P.L.	Property Line		
COM.	Communications	PRC	Point of Reverse Curve		
CONC.	Concrete	PROP.	Proposed		
C.O.A.	Control of Access	PT.	Point of Tangency		
COORD.	Coordinates	P.V.I.	Point of Vertical Intersection		
C.M.	Corrugated Metal	PVMT.	Pavement		
C.M.P.	Corrugated Metal Pipe	PWR.	Power		
CU.M.	Cubic Meter	R.	Radius of Curvature		
CULV.	Culvert	R.C.P.	Reinforced Concrete Pipe		
CS.	Curve to Spiral	R. C. J.	Rubber Gasket Joint		
C.	Cut	R.R.	Railroad		
CLC	CLEAR COVER	REINF.	REINFORCEMENT		
DEG.	Degree	RET.	Retaining		
DEM.	Demolish	REM.	Remove		
DIA.	Diameter	RT.	Right		
DIM.	Dimension	R.O.W.	Right Of Way		
DWG.	Drawing	RD.	Road		
DWY.	Driveway	RDWAY.	Roadway		
E.H.W.	Extreme High Water	SAN.S.	Sanitary Sewer		
ELEV.	Elevation	S.M.H.	Sanitary Sewer Manhole		
E. TO E.	End to End	SHDR.	Shoulder		
ENGR.	Engineer	SW.	Sidewalk		
EST.	Estimate	SC.	Spiral to Curve		
EXC.	Excavation	ST.	Spiral to Tangent		
EXIST.	Existing	SQ.M.	Square Meter		
E.G.	Existing Ground	STA.	Station		
EXP.	Expansion	S.S.	Storm Sewer		
EXT.	External	STL.	STEEL		
E.D.	External Distance	STR.	Structure		
F. TO F.	Face to Face	S.G.	Subgrade		
FA.	Federal Aid	S.L.	Survey Line		
FAP.	Federal Aid Primary	TOP, (T)	REINFORCEMENT AT TOP		
FAS.	Federal Aid Secondary	T.	Tangent Distance of Curve		
F.	Fill	T.E.	Top Elevation		
F.L.	Flow Line	T.G.	Top of Grate		
FWD.	Forward	T.O.C.	Top of Cut		
G.I.	Galvanized Iron	T.O.S.	Toe of Slope		
GALV.	Galvanized	T.P.	Telephone Pole		
G.	Gas	TS.	Tangent to Spiral		
G.V.	Gas Valve	TEL.	Telephone		
GRAV.	Gravel	T.O.W.	TOP OF WALL		
GRD.	Ground	UG.	Underground		
H.D.G.	HOT DIPPED GALVANIZED	VC.	Vertical Curve		
H.W.	High Water	VERT.	Vertical		
HOR.	Horizontal				
HYD.	Hydrant				
INV.	Invert				
I.E.	Invert Elevation				

GENERAL NOTES

GENERAL NOTES:

1. ALL ELEVATIONS ARE REFEREED TO MEAN SEA LEVEL AND GIVEN IN METERS.
2. ALL COORDINATES USED ARE REFERRED TO NAD 83 SYSTEM.
3. NORTH INDICATOR POINTS TO MAGNETIC NORTH.
4. THE CONTRACTOR SHALL MAGNETIC FREE ACCESS TO ALL PROPERTIES ALONG THE EXTERIOR PERIMETER THE PROJECT DUELING THE DURATION OF THE CONSTRUCTION OF THIS PROJECT.
5. METRIC SYSTEM HAS BEEN USED THROUGHOUT THE PROJECT UNLESS OTHERWISE SPECIFIED.
6. BORING LOGS PROFILES SHOWN ON THE PLANS WERE OBTAINED BY THE FIRM OF SUELOS INC. FOR USED IN THE PREPARATION OF THIS PROJECT PLANS.
7. THE CONTRACTOR SHALL BE RESPONSIBLE FOR PROTECTING FROM EROSION ALL EMBANKMENTS BY CONSTRUCTING BEAMS AND DISPOSING SURFACE WATER AT CONTROLLED POINTS AT NO EXTRA COST TO THE OWNER.
8. ANY UTILITY DAMAGES OCCURRING THAT ARE NOT SCHEDULED IN THE PLANS SHALL BE REPAINTED AT THE CONTRACTOR'S EXPENSE.
9. PRIOR TO CONSTRUCTION THE CONTRACTOR SHALL SUBMIT HIS COMMENTS OR QUESTIONS TO THE ENGINEER ABOUT CONFLICTS DISCREPANCIES PERMIT CLEARANCES THAT MAY CAUSE UNSCHEDULED DELAYS TO THE CONTRACTOR.
10. CONTINUOUS MAINTENANCE SHALL BE KEPT FOR ALL PERMANENT AND PROVISIONAL DRAINS DURING THE CONSTRUCTION.
11. THE CONTRACTOR SHALL PROVIDE ALL TEMPORARY DRAINAGE NEEDED DURING CONSTRUCTION.
12. ALL EXISTING PROJECT ELEMENTS THAT REQUIRE REMOVAL IN ORDER TO PERFORM ANY TASK RELATED TO COMPLETE THE PROJECT SHALL BE RESTORED TO ITS ORIGINAL POSITION UNLESS OTHER WISE INDICATED THE ORIGINAL POSITION VERTICAL AND HORIZONTALLY SHALL BE THE SAME. IF NECESSARY ANY DAMAGE PART TO THE FENCE OCCURRED WHILE REMOVAL SHALL BE REPLACED. PRIOR TO REMOVAL PHOTOS SHALL BE TAKEN AND FIELD FOR ANY FUTURE USE. THIS WORK SHALL BE COMPLETED AT THE CONTRACTOR'S EXPENSES.
13. CONTRACTOR MUST CONTAIN WORK WITHIN PROJECT LIMITS (SEE USI-1) AND THAT THE IS RESPONSIBLE FOR ANY DAMAGE TO PRIVATE PROPERTY AT THIS OWN EXPENSES.
14. THE CONTRACTOR IS RESPONSIBLE TO PREPARE ALL DOCUMENTS IN ORDER TO SUBMIT FOR APPROVAL OF THE "PERMISO GENERAL CONSOLIDADO", AND IT'S IMPLEMENTATION MAINTENANCE AND INSPECTION REPORT.
15. THE CONTRACTOR SHALL CONSIDER AND TAKE INTO ACCOUNT THAT ALL COMMERCIAL AND HOUSES WILL REMAIN OPERATIONAL DURING THE PROJECT CONSTRUCTION. THE CONTRACTOR WILL COORDINATE WITH OWNERS AND MUNICIPALITY OF ARECIBO & OTHER COMMERCIAL AND HOUSES ANY CONSTRUCTION ACTIVITIES THAT IMPACT THEIR OPERATIONS.
16. ALL EXISTING STORM SEWER TO REMAIN WITHIN THE PROJECT AND AROUND IT SHALL BE MAINTAINED. CLEAN AND OPERABLE AT ANY TIME DURING CONSTRUCTION OF PROJECT AT NO EXTRA COST TO THE OWNER.
17. UNSUITABLE MATERIAL SHALL BE DISPOSED BY THE CONTRACTOR IN PLACES APPROVED BY THE BEGINNER THE COST OF REMOVAL AND DISPOSAL SHALL BE CONSIDERED IN BASE BID PRICE.
18. CONTINUOUS MAINTENANCE SHALL BE KEPT FOR ALL PERMANENT AND PROVISIONAL DRAINS DURING THE CONSTRUCTION OF THE PROJECT.
19. THE CONTRACTOR SHALL BE DEPOSABLE OF STORAGE AND DELIVERY TO OWNER DESIGNATE LOCATION OFF ALL EXISTING EQUIPMENT TO BE REMOVED FROM EXISTING FOUNTAIN.
20. THE CONTRACTOR WILL BE RESPONSIBLE TO PROTECT FROM DAMAGE AND MAINTAIN EXISTING TREES IN THE PLAZA. MAINTENANCE WILL REQUIRE PROTECTING THE OPEN EARTH AREA AROUND THE ROOTS TO PREVENT THE DEPOSIT OF CONSTRUCTION DEBRIS AND LOOSE CEMENT POWDER.
21. THE CONTRACTOR WILL BE RESPONSIBLE TO PROTECT THE EXISTING "PUMA DE MUNOZ RIVERA" MONOLITH SCULPTURE DURING CONSTRUCTION FROM DAMAGES AND TO MAINTAIN THE EXISTING CONDITION AT ALL TIMES.

LEGEND

FEATURE	SYMBOL PROPOSED	SYMBOL EXISTING	REMARKS
SANITARY PIPE	S	S S	IDENTIFY SIZE TYPE & FLOW
SANITARY FORCE LINE			
STORM SEWER PIPE		SS SS	
WATER LINE	W	W W	
GAS LINE	GAS		
HEADWALLS	OR OR	OR OR	AS PER TYPE
SANITARY MANHOLE			IDENTIFY
STORM SEWER MANHOLE			
INLETS			IDENTIFY AS PER TYPE
WATER COURSE			IDENTIFY
SWALE			IDENTIFY
CONC. DITCH			IDENTIFY
PAVED DITCH			IDENTIFY
LAKE OR POND			IDENTIFY
SWAMP			IDENTIFY IF REQ.
WOODS		W	IDENTIFY IF REQ.
TREES	X X		IDENTIFY IF REQ.
EDGE OF WOODS			IDENTIFY IF REQ.
HEDGE			IDENTIFY IF REQ.
STATION NUMBER	00+000		
RIP RAP PAVING			IDENTIFY
ROCK			IDENTIFY
BLDG. TO DEM.			IDENTIFY TYPE, ETC.
SIGNS, GROUND,MTD.			
SIGNS OVERHEAD			
PROP. SIGN IDENT.	2/10		UPPER – CODE LOWER– LOCATION
CENTER LINE			IDENTIFY
SURVEY MONUMENT			IDENTIFY
SPOT ELEVATION	+135.00	134.25	DECIMAL POINT AT SPOT ELEV.
BENCH MARK		B.M. X NO.3	IDENTIFY
HORIZONTAL P.I.		V-3	IDENTIFY
CONTOUR LINES	90	90	
PAVEMENT			IDENTIFY ROAD
SIDEWALK	SW	SW	IDENTIFY
CURB			IDENTIFY
GUARD RAIL			IDENTIFY TYPE
BARRIER			IDENTIFY TYPE
BARRICADE			IDENTIFY
RETAINING WALL			IDENTIFY TYPE
CONC. PARAPETS			
WIRE FENCE			IDENTIFY TYPE
CYCLONE FENCE			IDENTIFY TYPE
PROPERTY LINE (a)			
R.O.W LINE & MON. (a)			IDENTIFY IF C.O.A.
ACCESS CONTROL			IDENTIFY LIMITS
TOP OF CUT	T.O.C.	T.O.C.	
TOE OF SLOPE	T.O.S.	T.O.S.	
BORING LOCATION			
COORDINATE GRID	E=0,000.00 N=0,000.00		
NEW. CONCRETE BLOCK WALL			
REINFORCED CONCRETE WALL			
FINISH FLOOR INDICATION	85.15		
BORING			IDENTIFY BORING LOCATION
FIRE HYDRANT	NFH	EFH	

FEATURE	SYMBOL PROPOSED	SYMBOL EXISTING	REMARKS
SECTION	A		
DETAILS	1		
REFERENCES AXIS LINES	1 / A		
LEVEL LINE			
BREAK LINE			
DEMOLITION AREA			
WET LAND AREA			
ADDED VALUE			
PHASE UNDER CONSTRUCTION			
STRUCTURAL SECTION	1		
STRUCTURAL DETAILS	A		
TOP OR BOTTOM VEIW			
CONCRETE CIRCULAR PILES			
CONCRETE SQUARE PILES			
STEEL PILES "H" TYPE			

LEGEND:

- SS SS — EXIST STORM SEWER LINE
- S S — EXIST SANITARY LINE
- W W — EXIST WATER LINE
- E E — EXIST UNDERGROUND ELECTRICAL LINE
- AE — EXIST. ELECTRICAL LINE
- U U — EXIST UNKNOWN UNDERGROUND UTILITIES
- T T — EXIST UNDER GROUND TELECOMUNICATION
- BENCH MARK
- HORIZONTAL CONTROL STATION
- EXISTING CYCLONE FENCE
- EXIST. BLOCK FENCE
- EXIST. ORNAMENTAL FENCE
- EXIST. IRON FENCE
- EXIST. BARBED WIRE FENCE
- EXIST. HOUSE
- EXIST. GUARD RAIL
- EXIST. CURB
- EXIST. SCHOOL
- EXIST. SANITARY MH
- EXIST. STORM SEWER MH
- EXIST. TELEPHONE MH
- EXIST. CATCH BASIN
- NEW CATCH BASIN
- EXIST. ELECTRICAL OR LUMINARY POLE
- EFH EXIST. FIRE HYDRANT
- NFH NEW EXIST. FIRE HYDRANT
- 0.00 EXIST. ELEVATION
- 0+000 NEW ELEVATION
- NEW SANITARY MH
- NEW SANITARY PIPE
- WV EXIST. WATER VALVE
- EXIST. TELEPHONE BOOTH
- WM EXIST. WATER METER
- WM NEW WATER METER
- EXIST. S. SEWER COVER
- NEW S. SEWER COVER
- NEW CHAIN LINK FENCE

REVITALIZATION OF
LUIS MUÑOZ RIVERA PLAZA
IN THE URBAN CENTER
ARECIBO, PUERTO RICO

IGLESIAS•VAZQUEZ and ASSOCIATES
ENGINEERS • ARCHITECTS • PLANNERS
320 FORTALEZA STREET 2nd FLOOR SAN JUAN, PUERTO RICO 00902 TELS. 721-4545 721-4546

SHEET TITLE: ABBREVIATIONS GENERAL NOTE & LEGEND
SCALE: AS SHOWN

CODE NO: 08-903-TS2

DRAWING NO: TS-2

DATE	REVISIONS

SHEET NO: 2 OF 00

N:\Proj\ARECIBO\903 PLAZA ARECIBO\DWG'S\002-903TS-2.dwg

REVITALIZATION OF LUIS MUÑOZ RIVERA PLAZA IN THE URBAN CENTER

ARECIBO, PUERTO RICO

IGLESIAS • VAZQUEZ and ASSOCIATES
ENGINEERS • ARCHITECTS • PLANNERS
320 FORTALEZA STREET 2nd FLOOR SAN JUAN, PUERTO RICO 00902 TELS. 721-4545 721-4546

PALMA STREET

LAB. CLINICO TOLEDO LLC (AAA, LENEL ROYAL ROOM)

LAB. CLINICO TOLEDO LLC LENEL ROYAL ROOM)

APS CLINICS

NADER ABDULLAH AL-KHATIB (GRAND STORES)

ARECIBO CITY HALL

JAURREGUI STR

COND. OLIVER

JOSE DE DIEGO AVE.

RAFAEL CAMPOS MARQUES

GRACIANO MARTINEZ SERRANO

MARIA DE L. VELASCO ALVAREZ (TACOS KIKO)

PLAZA LUIS MUÑOZ RIVERA

MARIA DE HOSTOS STREET

CATEDRAL SAN FELIPE APOSTOL

PALMA STREET

BETANCES STREET

GONZALEZ MARIN STREET

SONRISAS DE ARECIBO

MANUEL GALAN PEREZ (OFICINA CONSORCIO DE ARECIBO)

SUCN. JORGE ESTEVA GIRAL

JUAN A. NUNEZ CRUZ

ARASIBO STEAKHOUSE

RAUL ORRIOLA HERNANDEZ

JOSE A. MONTIJO SOLER

MARILIA MERCADO SABINO

DACO

PLAZA DEL DOMINO

EXISTING SITE PLAN

SCALE: 1:200

NORTH

SHEET TITLE: EXISTING SITE PLAN

SCALE: AS SHOWN

CODE NO: 08-903-

DRAWING NO: USI-1

SHEET NO: 3 OF 00

DATE	REVISIONS

N:\Proj\ARECIBO\903 PLAZA ARECIBO\DWG'S\003-903USI-1.dwg

REVITALIZATION OF LUIS MUÑOZ RIVERA PLAZA IN THE URBAN CENTER
ARECIBO, PUERTO RICO

IGLESIAS • VAZQUEZ and ASSOCIATES
ENGINEERS • ARCHITECTS • PLANNERS
320 FORTALEZA STREET 2nd FLOOR SAN JUAN, PUERTO RICO 00902 TELS. 721-4545 721-4546

SHEET TITLE: EXISTING TOPOGRAPHIC SITE PLAN
SCALE: AS SHOWN

CODE NO: 08-903-

DRAWING NO: USI-2

SHEET NO: 3 OF 00

DATE	REVISIONS

EXISTING TOPOGRAPHIC SITE PLAN
SCALE: 1:200

NORTH

N:\Proj\ARECIBO\903 PLAZA ARECIBO\DWG'S\004-903USI-2EXIST TOPOGRAPHIC SITE.dwg

PALMA STREET

LAB. CLINICO TOLEDO LLC (AAA, LENEL ROYAL ROOM)

LAB. CLINICO TOLEDO LLC LENEL ROYAL ROOM)

APS CLINICS

NADER ABDULLAH AL-KHATIB (GRAND STORES)

ARECIBO CITY HALL

JAURREGUI STR

COND. OLIVER

JOSE DE DIEGO AVE.

RAFAEL CAMPOS MARQUES

GRACIANO MARTINEZ SERRANO

MARIA DE HOSTOS STREET

CATEDRAL SAN FELIPE APOSTOL

MARIA DE L. VELASCO ALVAREZ (TACOS KIKO)

PALMA STREET

BETANCES STREET

SONRISAS DE ARECIBO

GONZALEZ MARIN STREET

DACO

MANUEL GALAN PEREZ (OFICINA CONSORCIO DE ARECIBO)

MARILIA MERCADO SABINO

JOSE A. MONTIJO SOLER

RAUL ORRIOLA HERNANDEZ

ARASIBO STEAKHOUSE

JUAN A. NUNEZ CRUZ

SUCN. JORGE ESTEVA GIRAL

PLAZA DEL DOMINO

PROPOSED GRADING SITE PLAN

SCALE: 1:200

NORTH

LEGEND:

7.869 + EXISTING ELEV. TO REMAIN

7.869 + PROPOSED ELEV.

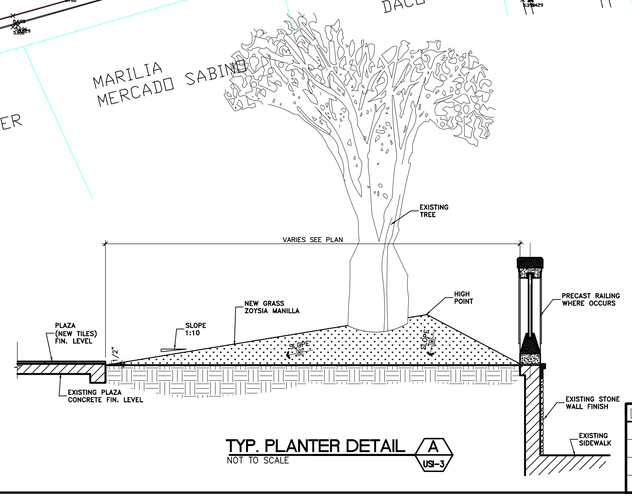

TYP. PLANTER DETAIL A

NOT TO SCALE

USI-3

N:\Proj\ARECIBO\903 PLAZA ARECIBO\DWG'S\005-903USI-3 PROP GRADING SITE PLAN.dwg

REVITALIZATION OF
LUIS MUÑOZ RIVERA PLAZA
IN THE URBAN CENTER
ARECIBO, PUERTO RICO

IGLESIAS•VAZQUEZ and ASSOCIATES
ENGINEERS • ARCHITECTS • PLANNERS
320 FORTALEZA STREET 2nd FLOOR SAN JUAN, PUERTO RICO 00902 TELS. 721-4545 721-4546

SHEET TITLE: PROPOSED GRADING SITE PLAN

SCALE: AS SHOWN

CODE NO: 08-903-

DRAWING NO: USI-3

DATE	REVISIONS

SHEET NO: 5 OF 00

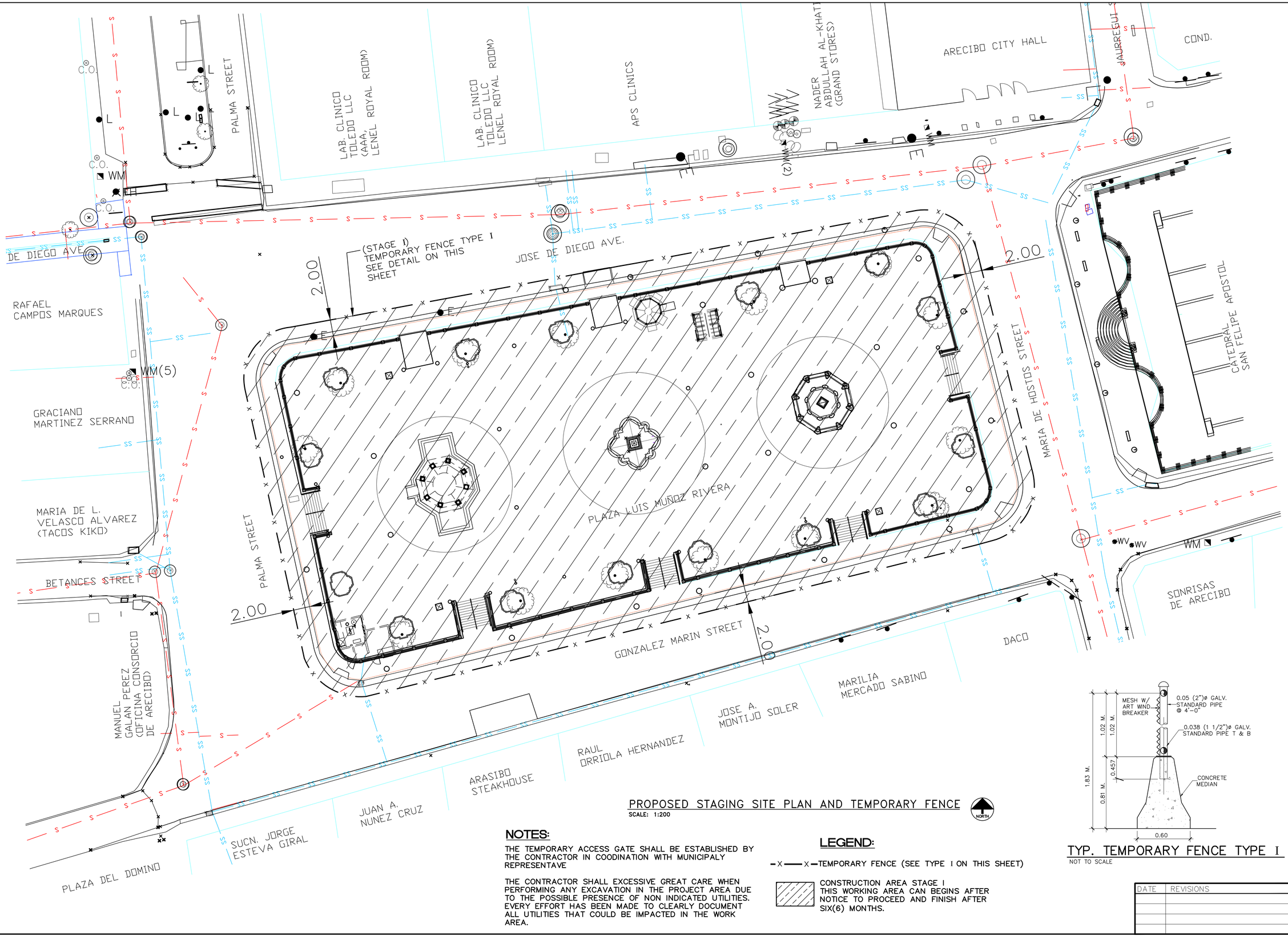

PROPOSED STAGING SITE PLAN AND TEMPORARY FENCE

SCALE: 1:200

NORTH

NOTES:

THE TEMPORARY ACCESS GATE SHALL BE ESTABLISHED BY THE CONTRACTOR IN COODINATION WITH MUNICIPALY REPRESENTAVE

THE CONTRACTOR SHALL EXCESSIVE GREAT CARE WHEN PERFORMING ANY EXCAVATION IN THE PROJECT AREA DUE TO THE POSSIBLE PRESENCE OF NON INDICATED UTILITIES. EVERY EFFORT HAS BEEN MADE TO CLEARLY DOCUMENT ALL UTILITIES THAT COULD BE IMPACTED IN THE WORK AREA.

LEGEND:

-X—X- TEMPORARY FENCE (SEE TYPE I ON THIS SHEET)

CONSTRUCTION AREA STAGE I
THIS WORKING AREA CAN BEGINS AFTER NOTICE TO PROCEED AND FINISH AFTER SIX(6) MONTHS.

TYP. TEMPORARY FENCE TYPE I

NOT TO SCALE

DATE	REVISIONS

REVITALIZATION OF
LUIS MUÑOZ RIVERA PLAZA
IN THE URBAN CENTER
ARECIBO, PUERTO RICO

IGLESIAS•VAZQUEZ and ASSOCIATES
320 FORTALEZA STREET 2nd FLOOR SAN JUAN, PUERTO RICO 00902 TELS. 721-4545 721-4546
ENGINEERS • ARCHITECTS • PLANNERS

SHEET TITLE:
PROPOSED STAGING PLAN AND TEMPORARY FENCE SITE PLAN

SCALE: AS SHOWN

CODE NO:
08-903-

DRAWING NO:
USI-4

SHEET NO:
6
OF
00

N:\Proj\ARECIBO\903 PLAZA ARECIBO\DWG'S\006-903USI-4 PROP TEMPOLARY FENCE STAGE 1.dwg

REVITALIZATION OF LUIS MUÑOZ RIVERA PLAZA IN THE URBAN CENTER ARECIBO, PUERTO RICO

IGLESIAS•VAZQUEZ and ASSOCIATES
ENGINEERS • ARCHITECTS • PLANNERS
320 FORTALEZA STREET 2nd FLOOR SAN JUAN, PUERTO RICO 00902 TELS. 721-4545 721-4546

JOSE DE DIEGO AVE.

PALMA STREET

LAB. CLINICO TOLEDO LLC (AAA, LENEL ROYAL ROOM)

APS CLINICS

NADER ABDULLAH AL-KHATIB (GRAND STORES)

ARECIBO CITY HALL

JAURREGUI STREET

COND. OLIVER

CATEDRAL SAN FELIPE APOSTOL

MARIA DE HOSTOS STREET

RAFAEL CAMPOS MARQUES

GRACIANO MARTINEZ SERRANO

MARIA DE L. VELASCO ALVAREZ (TACOS KIKO)

PLAZA LUIS MUÑOZ RIVERA

BETANCES STREET

MANUEL GALAN PEREZ (OFICINA CONSORCIO DE ARECIBO)

GONZALEZ MARIN STREET

SUCN. JORGE ESTEVA GIRAL

JUAN A. NUNEZ CRUZ

ARASIBO STEAKHOUSE

RAUL ORRIOLA HERNANDEZ

JOSE A. MONTIJO SOLER

MARILIA MERCADO SABINO

DACO

SONRISAS DE ARECIBO

PLAZA DEL DOMINO

BORING NO.1
X=170124.22
Y=270693.68
Z=7.876

BORING NO.2
X=170122.35
Y=270703.21
Z=7.952

BORING NO.3
X=170120.05
Y=270715.34
Z=7.897

BORING NO.4
X=170130.45
Y=270713.98
Z=8.017

BORING NO.5
X=170133.33
Y=270698.10
Z=7.915

BORING NO.6
X=170148.84
Y=270709.18
Z=7.937

BORING NO.7
X=170149.30
Y=270720.02
Z=7.960

BORING NO.8
X=170156.98
Y=270723.55
Z=7.997

BORING NO.9
X=170161.08
Y=270725.79
Z=8.039

BORING NO.10
X=170173.39
Y=270714.26
Z=7.963

BORING NO.11
X=170177.11
Y=270721.23
Z=8.020

BORING NO.12
X=170185.07
Y=270727.32
Z=8.023

BORING NO.13
X=170184.99
Y=270717.08
Z=7.957

BORING NO.15
X=170180.10
Y=270707.28
Z=7.875

BORING14
X=170191.04
Y=270707.84
Z=7.872

BORING LOCATION PLAN
SCALE: 1:200

NORTH

LEGEND
ORIGINAL SUELOS INC LOCATIONS

SHEET TITLE: BORING LOCATION PLAN
SCALE: AS SHOWN

CODE NO: 08-903-SS1

DRAWING NO: SS-1

SHEET NO: 7 OF 00

DATE	REVISIONS

N:\Proj\ARECIBO\903 PLAZA ARECIBO\DWG'S\007-903SS-1.dwg

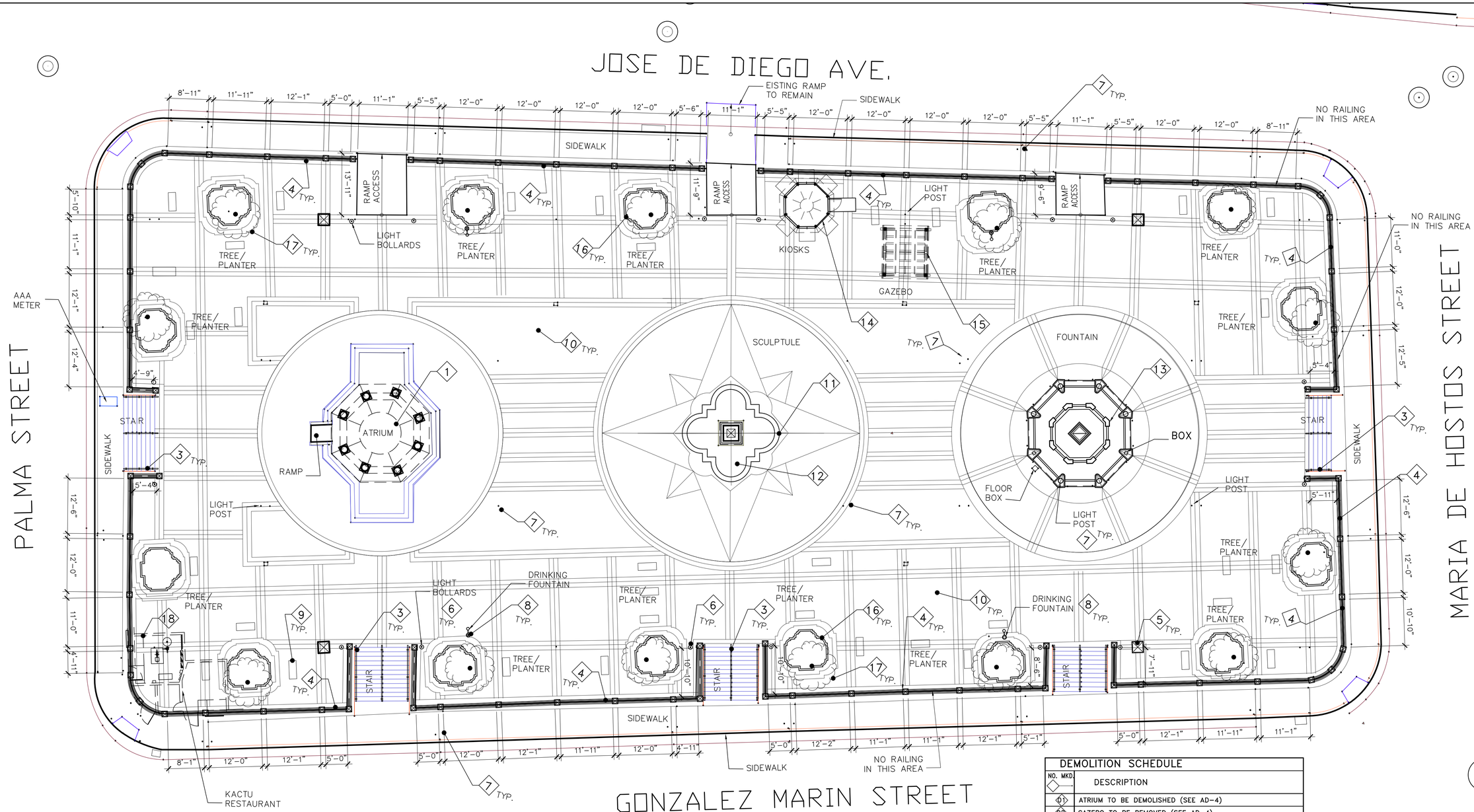

EXISTING AND DEMOLITION PLAZA FLOOR PLAN

SCALE: 3/32"=1'-0"

NORTH

DEMOLITION SCHEDULE	
NO. MKD.	DESCRIPTION
01	ATRIUM TO BE DEMOLISHED (SEE AD-4)
02	GAZEBO TO BE REMOVED (SEE AD-4)
03	STAIR RAILING TO BE REMOVED-REFER TO ASBETO & LBP STUDY (TERNICA SPECS.)
04	GRILLES RAILING AND COLUMN TO BE REMOVED (SEE NOTE 3 - APPLIES TO GRILLES IN THIS ITEM)
05	CONCRETE MONUMENT TO BE REMOVED
06	LIGHT BOLLARDS TO BE REMOVED (SEE NOTE 1)
07	LIGHT POST TO BE REMOVED (SEE NOTE 3)
08	DRINKING FOUNTAIN TO BE REMOVED
09	BENCH TO BE REMOVED (SEE NOTE 3)
10	FLOOR FIN. TO BE REMOVED (SEE NOTE 1)
11	CONCRETE LOW WALL TO REMAIN AND REVITALIZED
12	PLANTING TO REMAIN AND TO BE REVITALIZED
13	FOUNTAIN AND WALL TO BE DEMOLISHED (SEE NOTE 1)
14	KIOSKS TO BE DEMOLISHED (SEE NOTE 1)
15	GAZEBO TO BE DEMOLISHED (SEE NOTE 1)
16	PLANTER TO BE DEMOLISHED (SEE NOTE 1)
17	TREE TO REMAIN
18	ELECTRICAL AND MECH. ROOM TO REMOVE EQUIPMENT (SEE NOTE 3)

NOTE:
1- THE CONTRACTOR WILL DISPOSE OF ALL THE EQUIPMENT AND MATERIALS REMOVED.

2- FOR STRUCTURES DETAILS SEE DWG. AD-3,4.

3- THE CONTRACTOR WILL TRANSPORT AND STORE THESE MATERIALS / EQUIPMENT AT A LOCATION AS INSTRUCTED THE MUNICIPALITY.

IMPORTANT NOTE:

THE EXISTING ELEMENTS TO BE DEMOLISHED IN THE PLAZA ARE NOT CHARACTER DEFINING ELEMENTS (THE FLOOR MATERIAL AND PATTERN, THE LARGE GAZEBO, THE CONCRETE PERIPHERAL RAILING, BENCHES, THE POLES AND LUMINARIES AND THE FOUNTAIN ELEMENTS). THE CHARACTER DEFINING ELEMENTS LEFT AND INCORPORATED AS PART OF THE PROJECT ARE: THE EXISTING FICUS TREES, THE CENTRAL OBELISK SCULPTURE AND THE SURROUNDING PLANTING AREA.

DATE	REVISIONS

REVITALIZATION OF
LUIS MUÑOZ RIVERA PLAZA
IN THE URBAN CENTER
ARECIBO, PUERTO RICO

IGLESIAS•VAZQUEZ and ASSOCIATES
320 FORTALEZA STREET 2nd FLOOR SAN JUAN, PUERTO RICO 00902 TELS. 721-4545 721-4546
ENGINEERS • ARCHITECTS • PLANNERS

SHEET TITLE:
EXISTING AND DEMOLITION
PLAZA FLOOR PLAN
SCALE: AS SHOWN

CODE NO:
08-903-

DRAWING NO:
AD-1

SHEET NO:
8
OF
00

N:\Proj\ARECIBO\903 PLAZA ARECIBO\DWGS\008-903AD-1.dwg

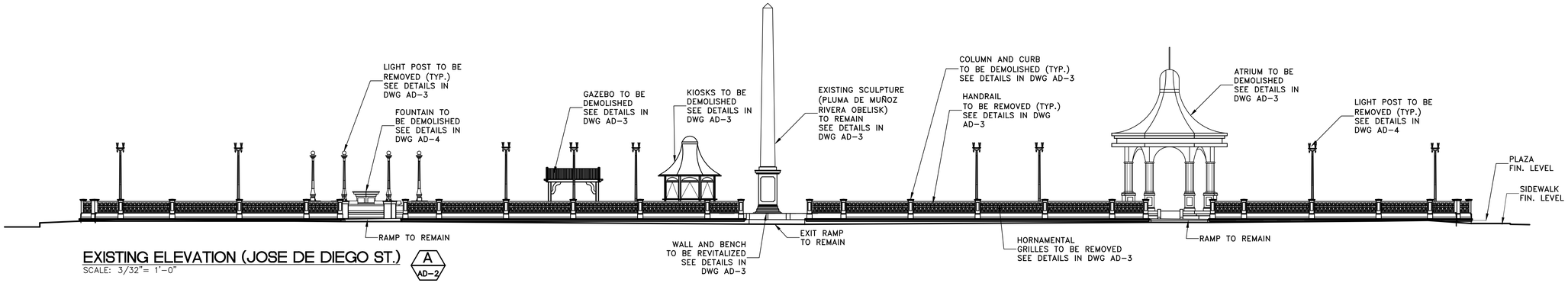

EXISTING ELEVATION (JOSE DE DIEGO ST.) A AD-2

SCALE: 3/32"= 1'-0"

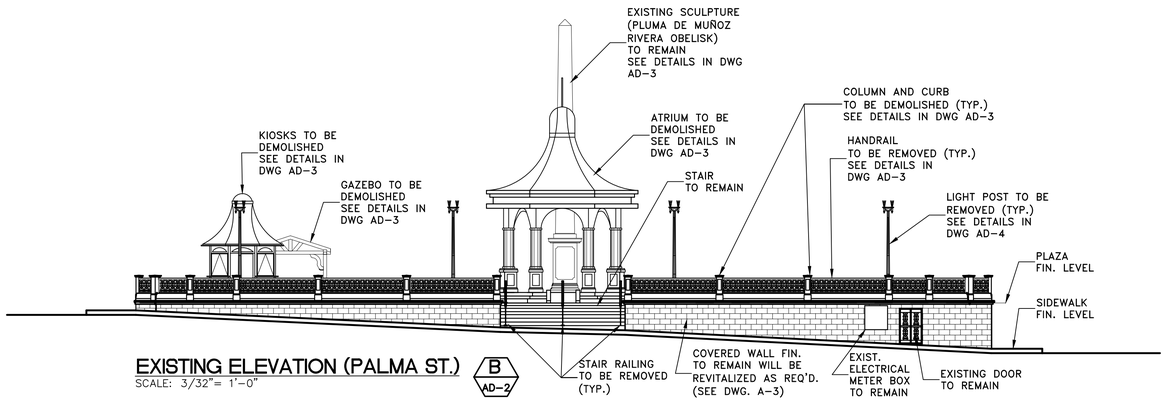

EXISTING ELEVATION (PALMA ST.) B AD-2

SCALE: 3/32"= 1'-0"

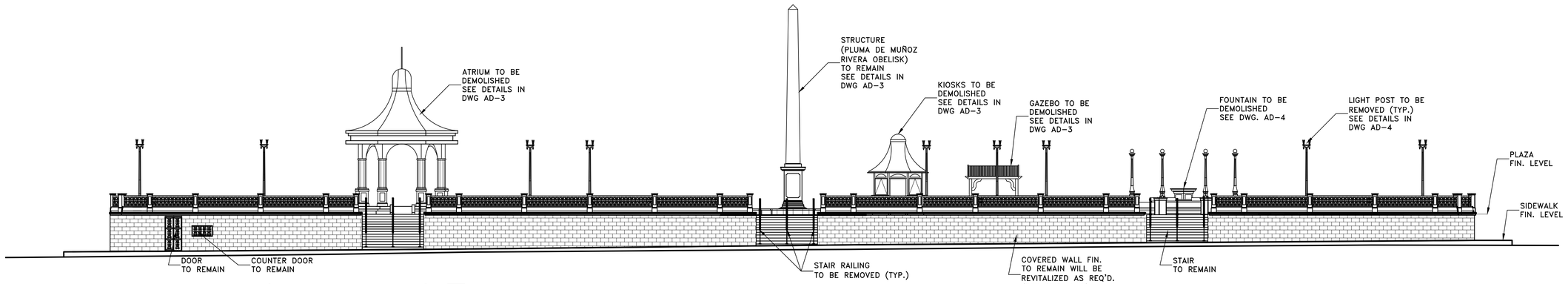

EXISTING ELEVATION (GONZALEZ MARIN ST.) C AD-2

SCALE: 3/32"= 1'-0"

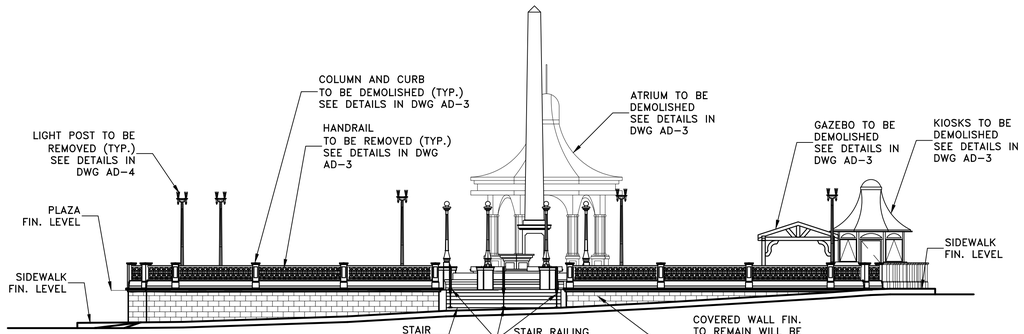

EXISTING ELEVATION (MARIA DE HOSTOS ST.) D AD-2

SCALE: 3/32"= 1'-0"

IMPORTANT NOTE:

THE EXISTING ELEMENTS TO BE DEMOLISHED IN THE PLAZA ARE NOT CHARACTER DEFINING ELEMENTS (THE FLOOR MATERIAL AND PATTERN, THE LARGE GAZEBO, THE CONCRETE PERIPHERAL RAILING, BENCHES, THE POLES AND LUMINARIES AND THE FOUNTAIN ELEMENTS). THE CHARACTER DEFINING ELEMENTS LEFT AND INCORPORATED AS PART OF THE PROJECT ARE: THE EXISTING FICUS TREES, THE CENTRAL OBELISK SCULPTURE AND THE SURROUNDING PLANTING AREA.

DATE	REVISIONS

REVITALIZATION OF
LUIS MUÑOZ RIVERA PLAZA
IN THE URBAN CENTER
ARECIBO, PUERTO RICO

IGLESIAS•VAZQUEZ and ASSOCIATES
320 FORTALEZA STREET 2nd FLOOR SAN JUAN, PUERTO RICO 00902 TELS. 721-4545 721-4546
ENGINEERS • ARCHITECTS • PLANNERS

SHEET TITLE: EXISTING ELEVATION

SCALE: AS SHOWN

CODE NO: 08-903-

DRAWING NO: AD-2

SHEET NO: 9 OF 00

N:\Proj\ARECIBO\903 PLAZA ARECIBO\DWG'S\009-010-011-903AD-2 - AD-3 - AD-4.dwg

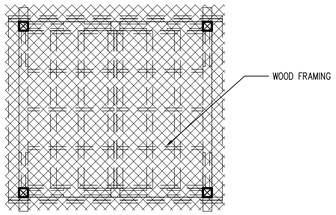

PLAN

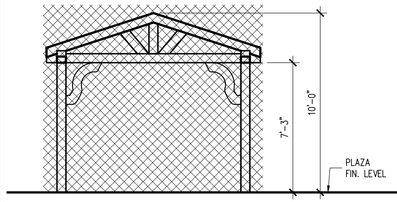

FRONT ELEVATION

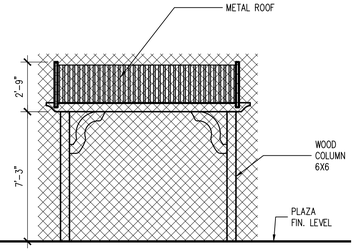

LATERAL ELEVATION

GAZEBO DETAILS
SCALE: 1/4"=1'-0"

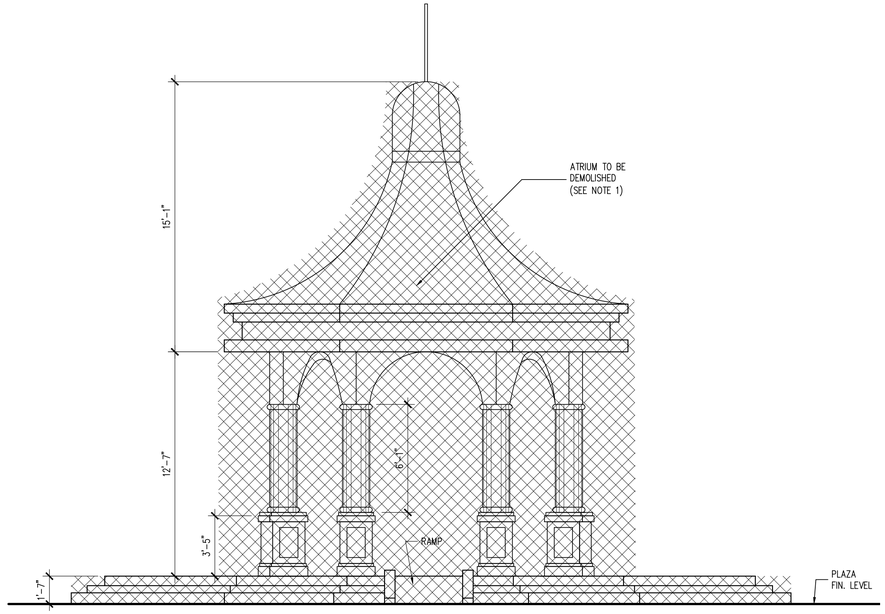

ELEVATION

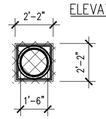

COL. PLAN

ATRIUM DETAILS
SCALE: 1/4"=1'-0"

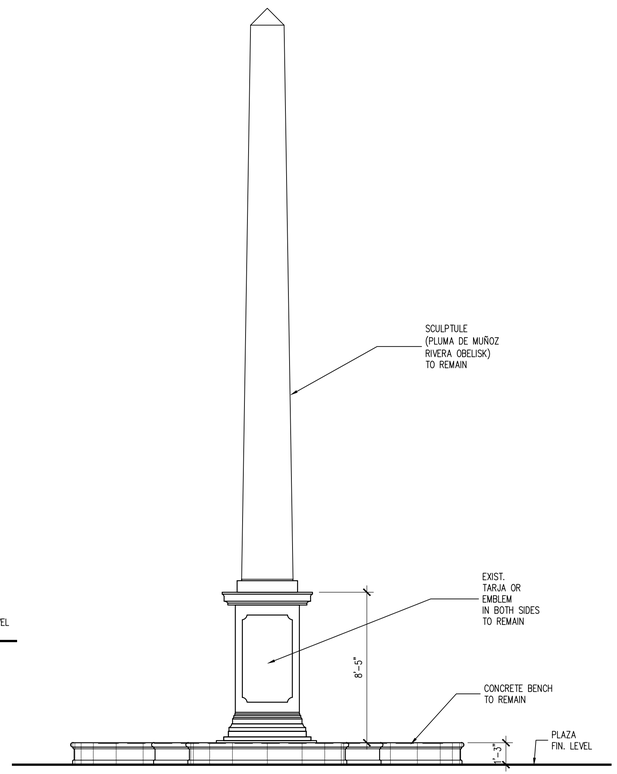

ELEVATION

PLAN — PLAZA ELEVATION — SECTION — STREET ELEVATION

NOTE:
THE EXISTING ORNAMENTAL METAL GRILLES WILL BE TRANSPORTED AND STORED AT A LOCATION AS INSTRUCTED BY THE MUNICIPALITY.

TYPICAL PLAZA PERIPHERAL RAILING DETAILS
SCALE: 1/4"=1'-0"

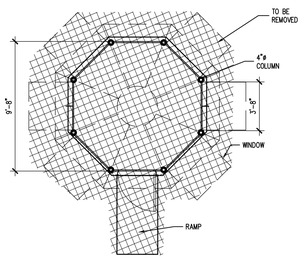

PLAN

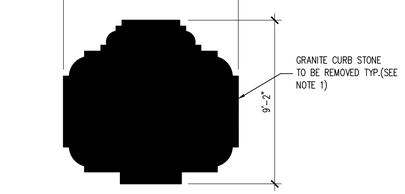

PLAN

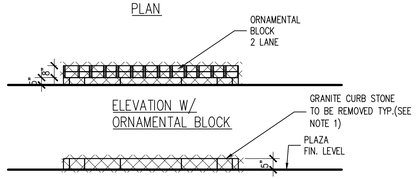

ELEVATION W/
ORNAMENTAL BLOCK

ELEVATION

TYPICAL PLANTING DETAILS
SCALE: 1/4"=1'-0"

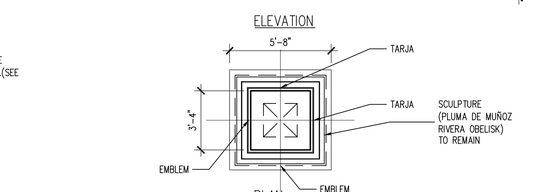

PLAN

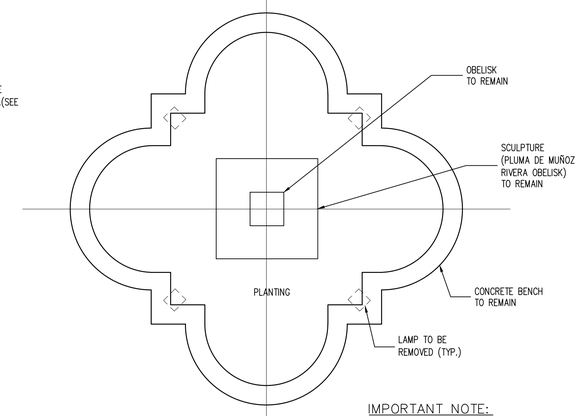

BENCH PLAN

SCULPTURE DETAILS
SCALE: 1/4"=1'-0"

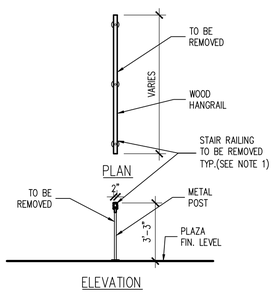

PLAN — ELEVATION

TYPICAL STAIR RAILING DETAILS
SCALE: 1/4"=1'-0"

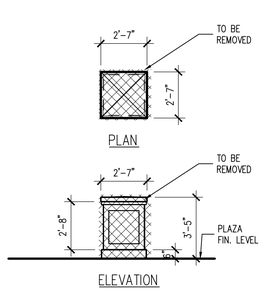

ELEVATION

TYPICAL CONCRETE BOLLARD DETAILS
SCALE: 1/4"=1'-0"

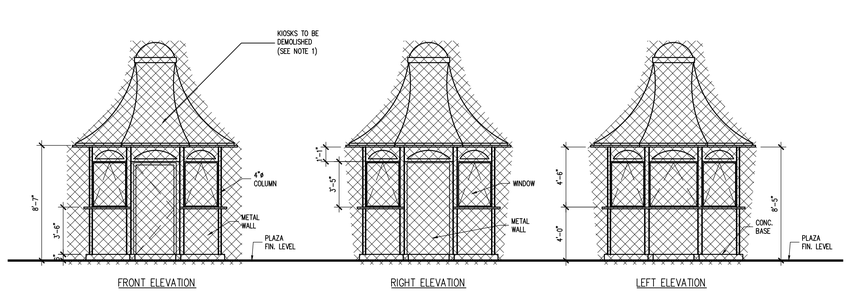

FRONT ELEVATION — RIGHT ELEVATION — LEFT ELEVATION

KIOSK DETAILS
SCALE: 3/16"=1'-0"

IMPORTANT NOTE:

THE EXISTING ELEMENTS TO BE DEMOLISHED IN THE PLAZA ARE NOT CHARACTER DEFINING ELEMENTS (THE FLOOR MATERIAL AND PATTERN, THE LARGE GAZEBO, THE CONCRETE PERIPHERAL RAILING, BENCHES, THE POLES AND LUMINARIES AND THE FOUNTAIN ELEMENTS). THE CHARACTER DEFINING ELEMENTS LEFT AND INCORPORATED AS PART OF THE PROJECT ARE: THE EXISTING FICUS TREES, THE CENTRAL OBELISK SCULPTURE AND THE SURROUNDING PLANTING AREA.

LEGEND:

EXISTING TO REMAIN

EXISTING TO BE DEMOLISHED

DATE	REVISIONS

REVITALIZATION OF
LUIS MUÑOZ RIVERA PLAZA
IN THE URBAN CENTER
ARECIBO, PUERTO RICO

IGLESIAS•VAZQUEZ and ASSOCIATES
320 FORTALEZA STREET 2nd FLOOR SAN JUAN, PUERTO RICO 00902 TELS. 721-4545 721-4546
ENGINEERS • ARCHITECTS • PLANNERS

SHEET TITLE:
EXISTING AND DEMOLITION
PLAZA MISCELLANEOUS DETAILS
SCALE: AS SHOWN

CODE NO:
08-903-

DRAWING NO:
AD-3

SHEET NO:
10
OF
00

N:\Pro\ARECIBO\903 PLAZA ARECIBO\DWG'S\009-010-011-903AD-2 - AD-3 - AD-4.dwg

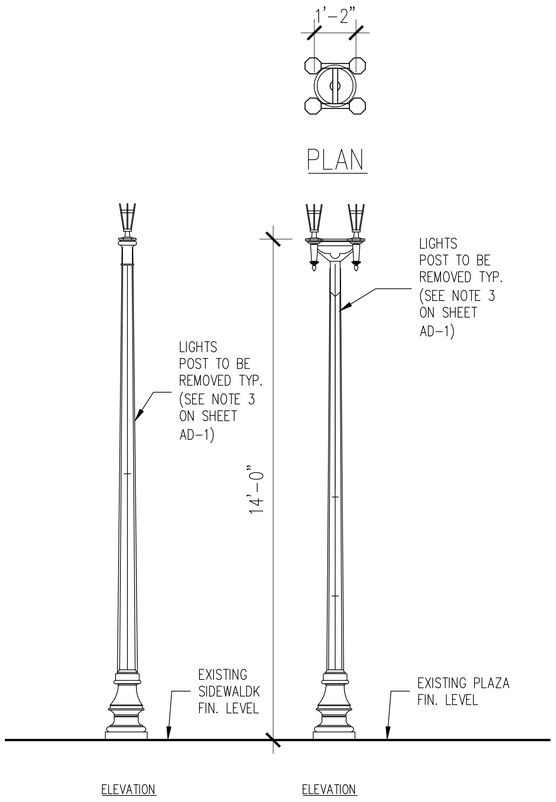

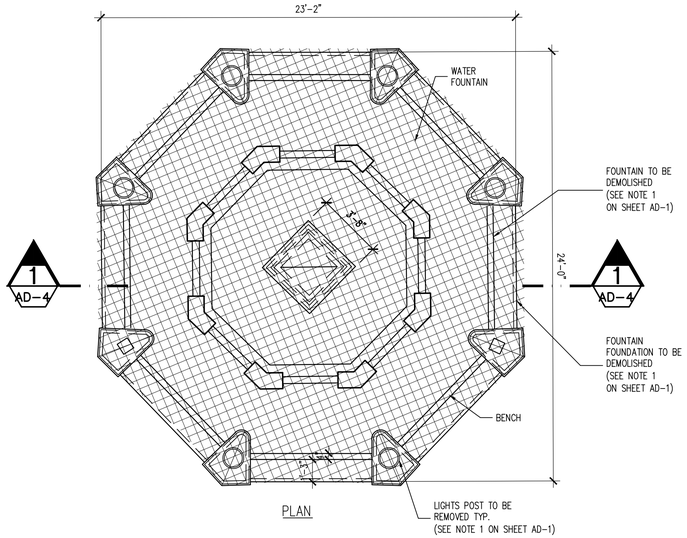

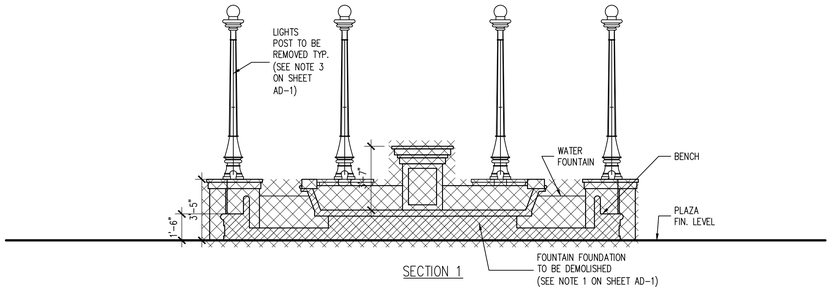

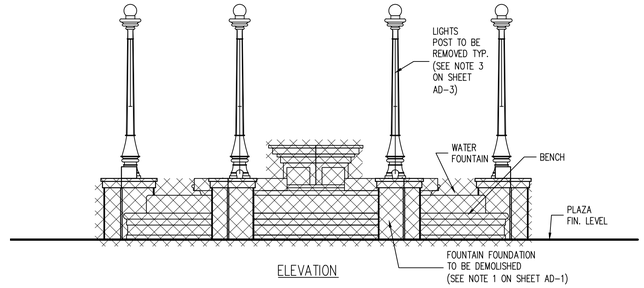

PLAZA LIGHT POLE DETAILS

SCALE: 1/2"=1'-0"

FOUNTAIN DETAILS

SCALE: 1/4"=1'-0"

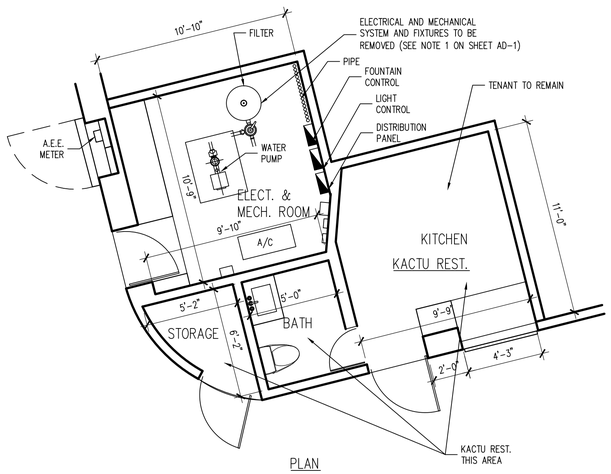

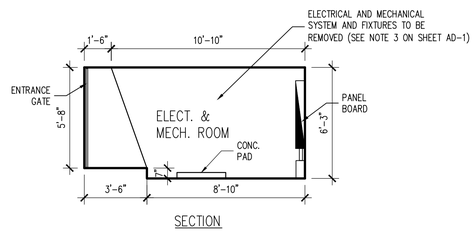

ELECTRICAL ROOM AND KITCHEN DETAILS

SCALE: 1/4"=1'-0"

IMPORTANT NOTE:

THE EXISTING ELEMENTS TO BE DEMOLISHED IN THE PLAZA ARE NOT CHARACTER DEFINING ELEMENTS (THE FLOOR MATERIAL AND PATTERN, THE LARGE GAZEBO, THE CONCRETE PERIPHERAL RAILING, BENCHES, THE POLES AND LUMINARIES AND THE FOUNTAIN ELEMENTS). THE CHARACTER DEFINING ELEMENTS LEFT AND INCORPORATED AS PART OF THE PROJECT ARE: THE EXISTING FICUS TREES, THE CENTRAL OBELISK SCULPTURE AND THE SURROUNDING PLANTING AREA.

DATE	REVISIONS

REVITALIZATION OF
LUIS MUÑOZ RIVERA PLAZA
IN THE URBAN CENTER
ARECIBO, PUERTO RICO

IGLESIAS • VAZQUEZ and ASSOCIATES
ENGINEERS • ARCHITECTS • PLANNERS
320 FORTALEZA STREET 2nd FLOOR SAN JUAN, PUERTO RICO 00902 TELS. 721-4545 721-4546

SHEET TITLE: EXISTING AND DEMOLITION PLAZA MISCELLANEOUS DETAILS
SCALE: AS SHOWN

CODE NO: 08-903-

DRAWING NO: AD-4

SHEET NO: 11 OF 00

N:\Proj\ARECIBO\903 PLAZA ARECIBO\DWG'S\009-010-011-903AD-2 - AD-3 - AD-4.dwg

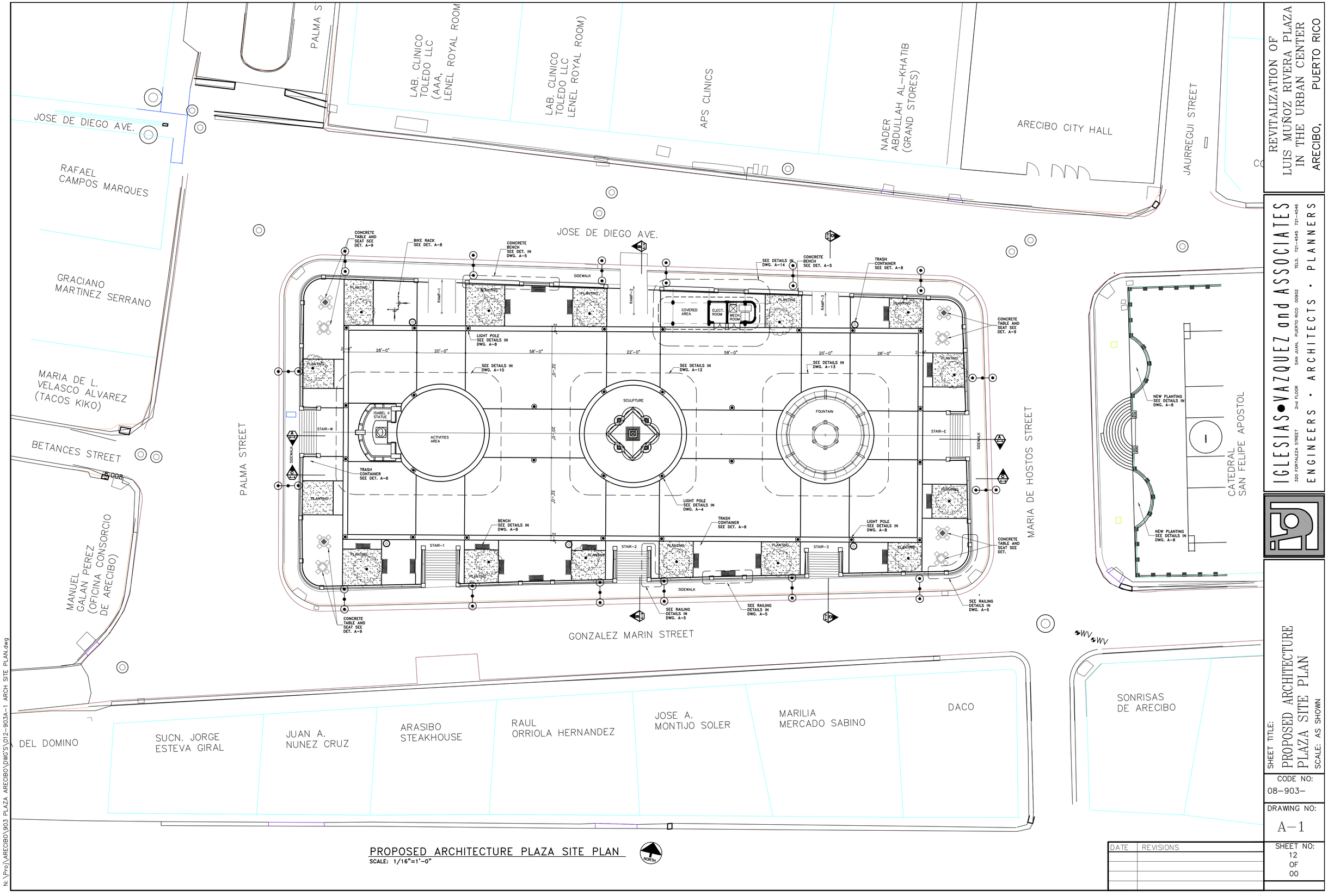

PROPOSED ARCHITECTURE PLAZA SITE PLAN

SCALE: 1/16"=1'-0"

NORTH

N:\Proj\ARECIBO\903 PLAZA ARECIBO\DWG'S\012-903A-1 ARCH SITE PLAN.dwg

REVITALIZATION OF
LUIS MUÑOZ RIVERA PLAZA
IN THE URBAN CENTER
ARECIBO, PUERTO RICO

IGLESIAS•VAZQUEZ and ASSOCIATES
ENGINEERS • ARCHITECTS • PLANNERS
320 FORTALEZA STREET 2nd FLOOR SAN JUAN, PUERTO RICO 00902 TELS. 721-4545 721-4546

SHEET TITLE: PROPOSED ARCHITECTURE PLAZA SITE PLAN
SCALE: AS SHOWN

CODE NO: 08-903-

DRAWING NO: A-1

DATE	REVISIONS

SHEET NO: 12 OF 00

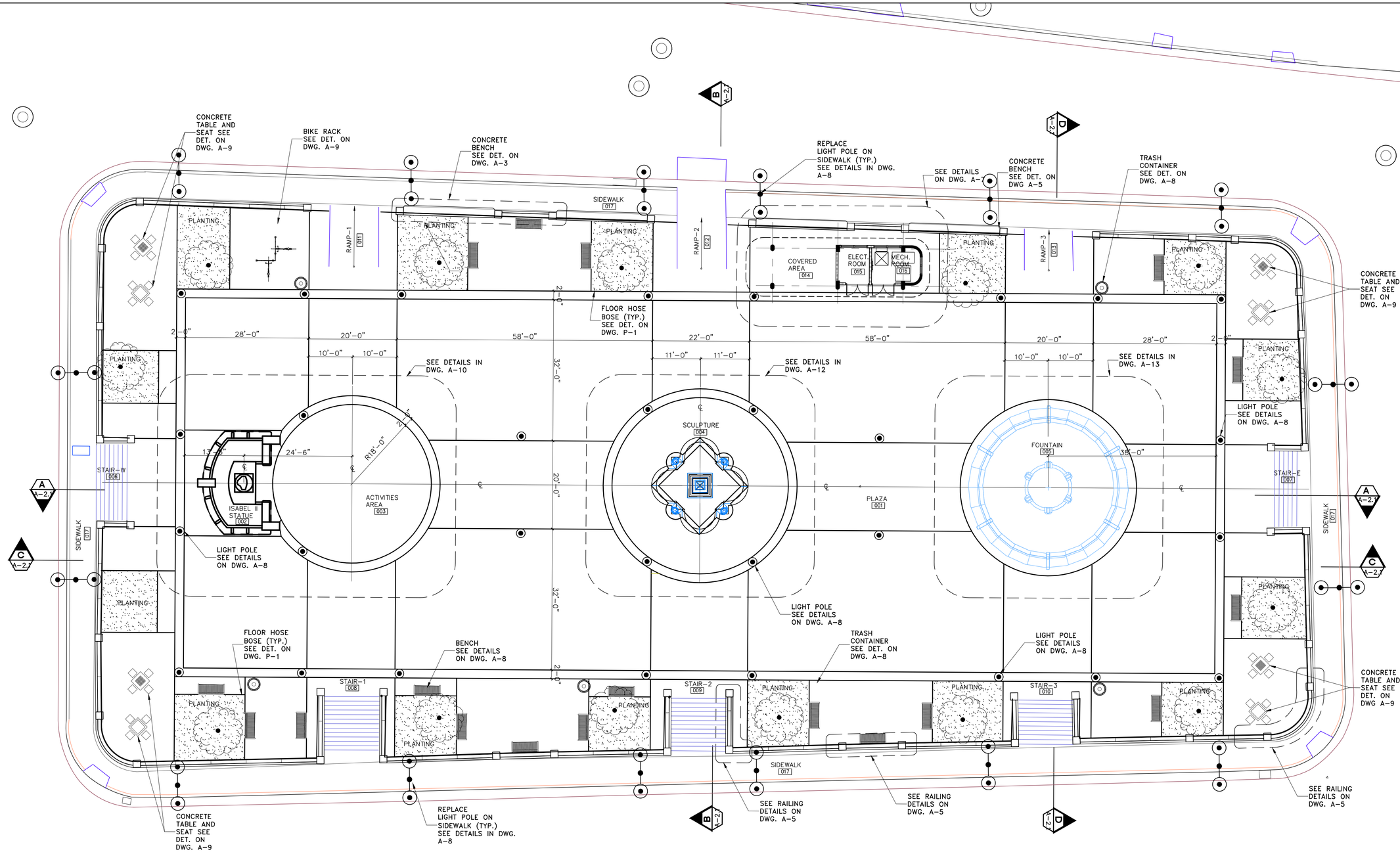

PROPOSED PLAZA FLOOR PLAN

SCALE: 3/32"=1'-0"

REVITALIZATION OF
LUIS MUÑOZ RIVERA PLAZA
IN THE URBAN CENTER
ARECIBO, PUERTO RICO

IGLESIAS•VAZQUEZ and ASSOCIATES
320 FORTALEZA STREET 2nd FLOOR SAN JUAN, PUERTO RICO 00902 TELS. 721-4545 721-4546
ENGINEERS • ARCHITECTS • PLANNERS

SHEET TITLE: PROPOSED PLAZA FLOOR PLAN

SCALE: AS SHOWN

CODE NO: 08-903-

DRAWING NO: A-2

DATE	REVISIONS

SHEET NO: 13 OF 00

N:\Proj\ARECIBO\903 PLAZA ARECIBO\DWG'S\013-903A-2.dwg

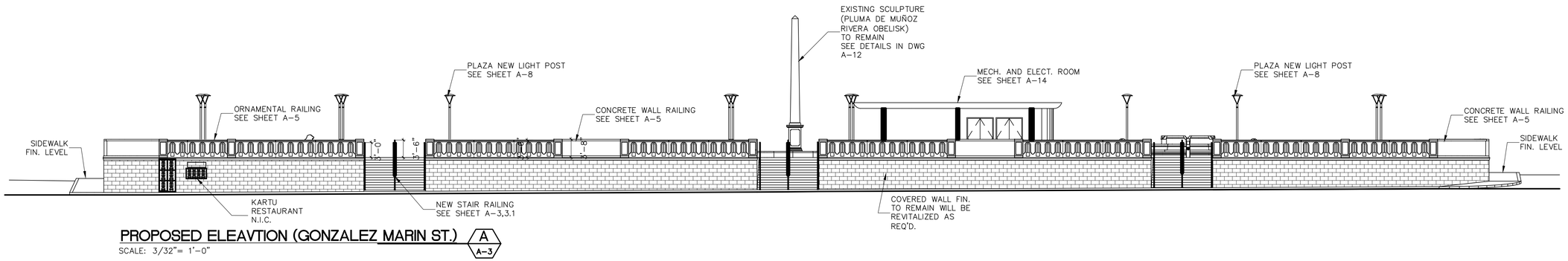

PROPOSED ELEAVTION (GONZALEZ MARIN ST.) A / A-3

SCALE: 3/32"= 1'-0"

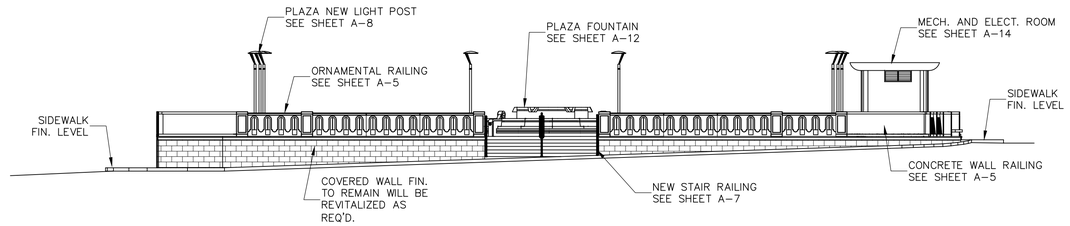

PROPOSED ELEAVTION (MARIA DE HOSTOS ST.) B / A-3

SCALE: 3/32"= 1'-0"

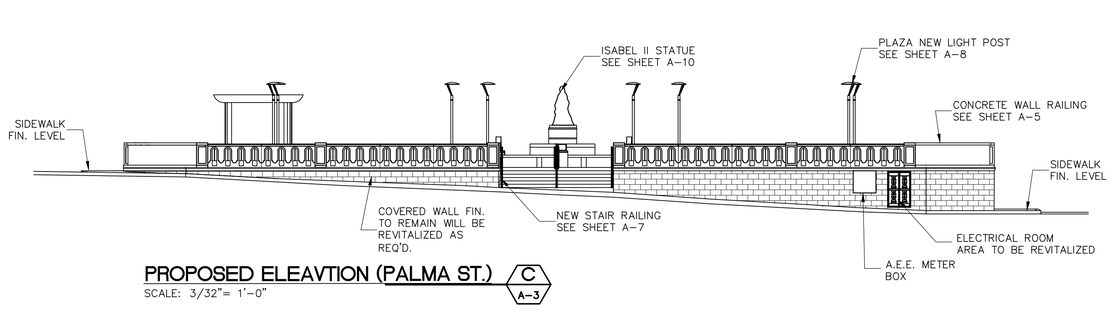

PROPOSED ELEAVTION (PALMA ST.) C / A-3

SCALE: 3/32"= 1'-0"

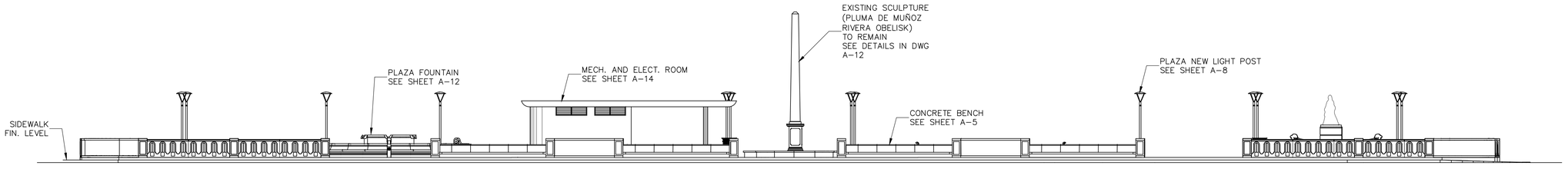

PROPOSED ELEAVTION (JOSE DE DIEGO ST.) D / A-3

SCALE: 3/32"= 1'-0"

REVITALIZATION OF
LUIS MUÑOZ RIVERA PLAZA
IN THE URBAN CENTER
ARECIBO, PUERTO RICO

IGLESIAS • VAZQUEZ and ASSOCIATES
320 FORTALEZA STREET 2nd FLOOR SAN JUAN, PUERTO RICO 00902 TELS. 721-4545 721-4546
ENGINEERS • ARCHITECTS • PLANNERS

SHEET TITLE: PROPOSED PLAZA ELEVATIONS

SCALE: AS SHOWN

CODE NO: 08-903-

DRAWING NO: A-3

DATE	REVISIONS

SHEET NO: 14 OF 00

N:\Proj\ARECIBO\903 PLAZA ARECIBO\DWG'S\014-015-903A-3-A-4.dwg

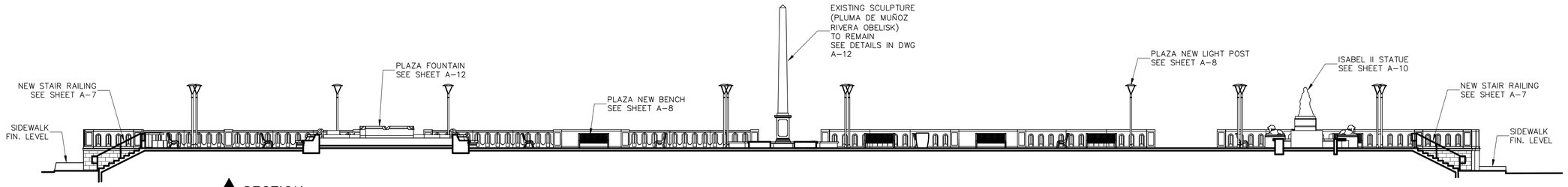

A SECTION
A-2 SCALE: 3/32" = 1'-0"

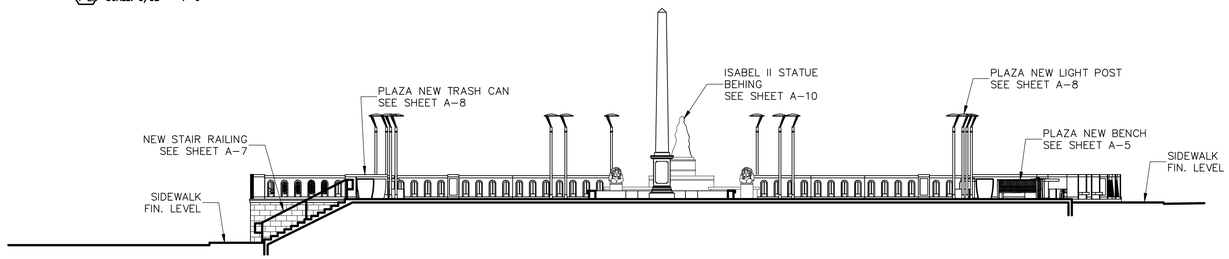

B SECTION
A-2 SCALE: 3/32" = 1'-0"

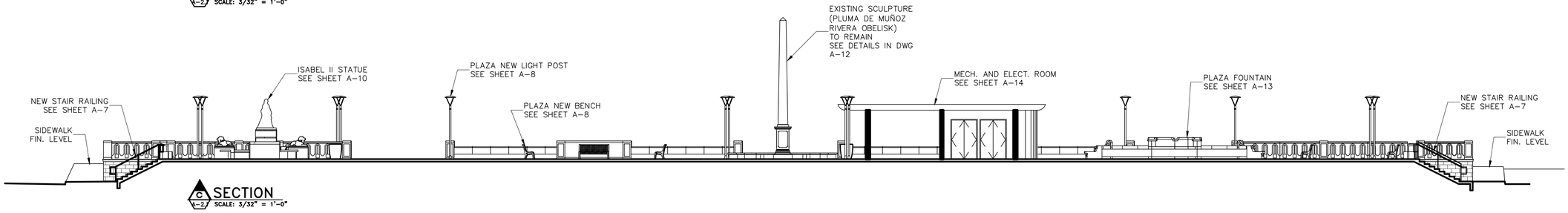

C SECTION
A-2 SCALE: 3/32" = 1'-0"

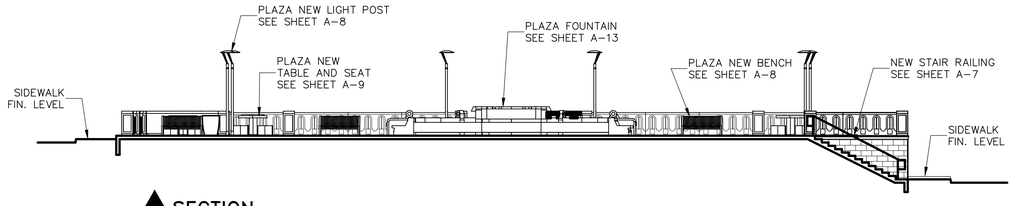

D SECTION
A-2 SCALE: 3/32" = 1'-0"

REVITALIZATION OF
LUIS MUÑOZ RIVERA PLAZA
IN THE URBAN CENTER
ARECIBO, PUERTO RICO

IGLESIAS•VAZQUEZ and ASSOCIATES
ENGINEERS • ARCHITECTS • PLANNERS
320 FORTALEZA STREET 2nd FLOOR SAN JUAN, PUERTO RICO 00902 TELS. 721-4545 721-4546

SHEET TITLE:
PROPOSED PLAZA SECTIONS

SCALE: AS SHOWN

CODE NO:
08-903-

DRAWING NO:
A-4

DATE	REVISIONS

SHEET NO:
15
OF
00

N:\Proj\ARECIBO\903 PLAZA ARECIBO\DWG'S\014-015-903A-3-A-4.dwg

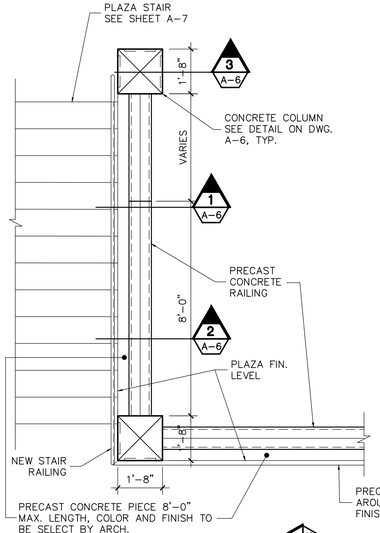

RAILING TYP. AT STAIR AREA
SCALE: 3/8" = 1'-0"

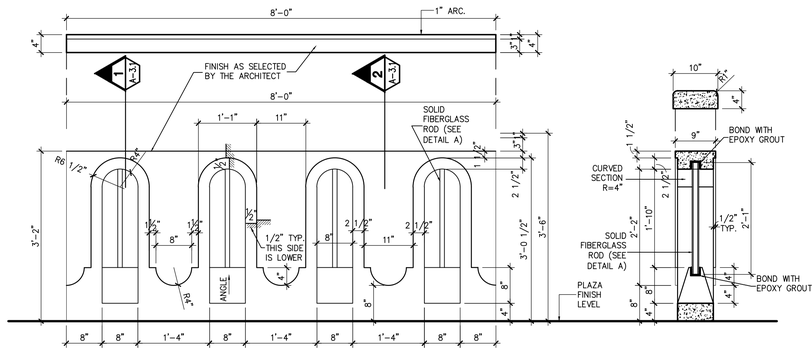

TYPICAL PERIMETER PLAZA RAILING
SCALE: 3/4" = 1'-0"

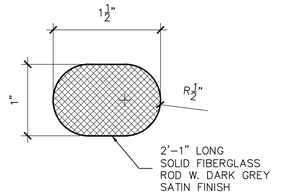

ROD DETAIL "A"
SCALE: FULL

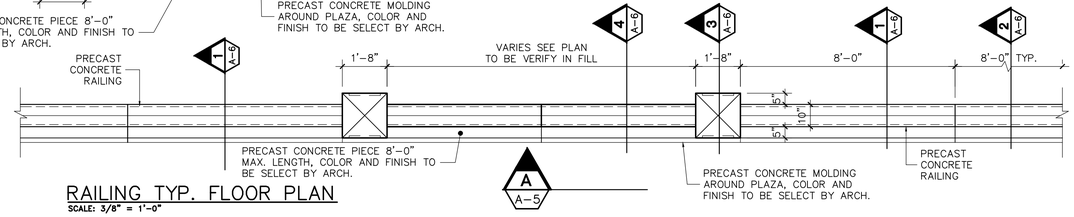

RAILING TYP. FLOOR PLAN
SCALE: 3/8" = 1'-0"

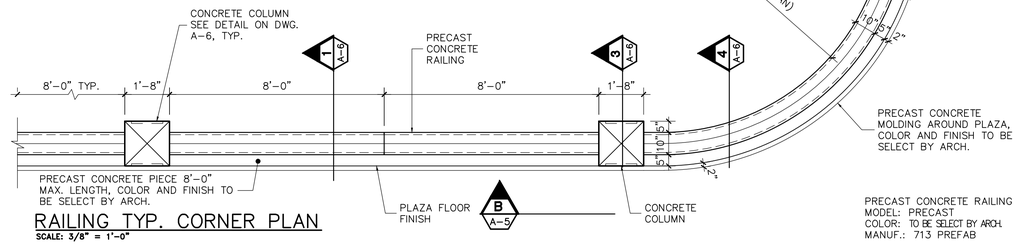

RAILING TYP. CORNER PLAN
SCALE: 3/8" = 1'-0"

PRECAST CONCRETE RAILING
MODEL: PRECAST
COLOR: TO BE SELECT BY ARCH.
MANUF.: 713 PREFAB

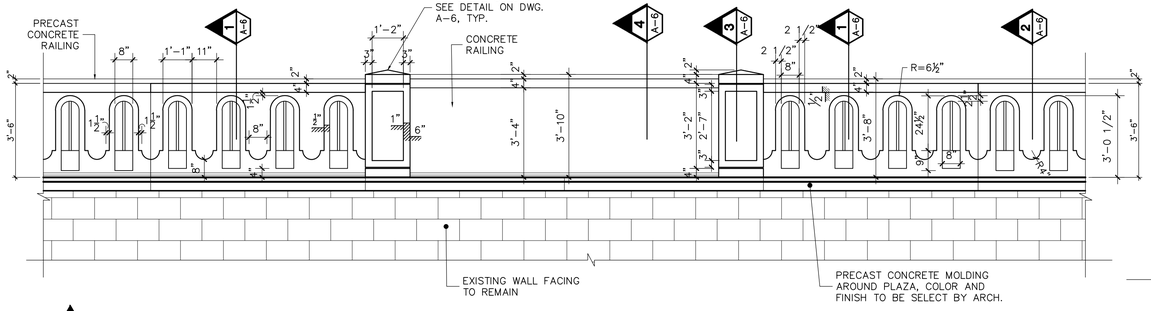

A SECTION
A-5 SCALE: 3/8" = 1'-0"

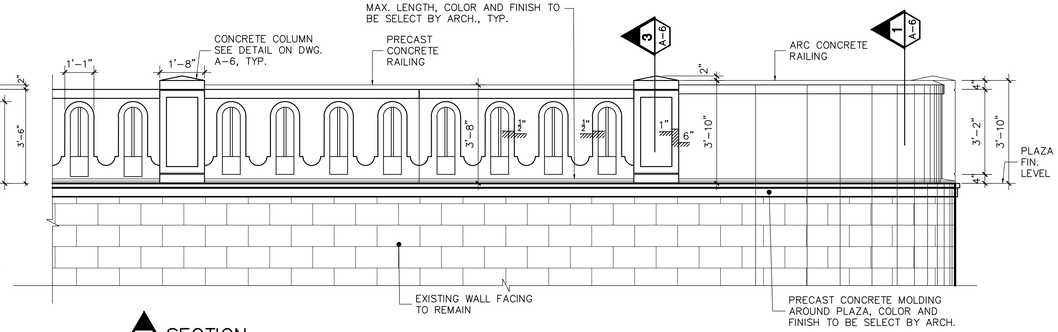

B SECTION
A-5 SCALE: 3/8" = 1'-0"

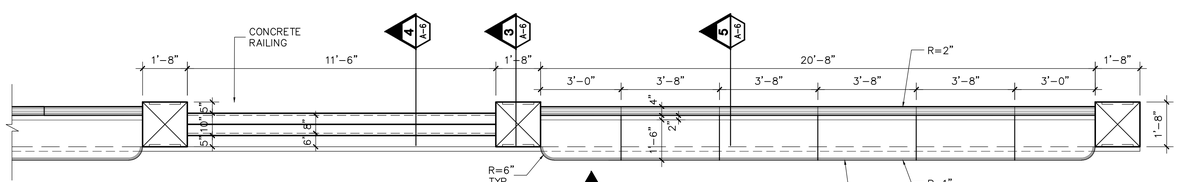

RAILING AND BENCH TYP. FLOOR PLAN
SCALE: 3/8" = 1'-0"

PRECAST CONCRETE BENCH
MODEL: PRECAST
COLOR AND FINISH: TO BE SELECT BY
ARCH. (SAME THAT FOUTAIN FINISH)
MANUF.: 713 PREFAB

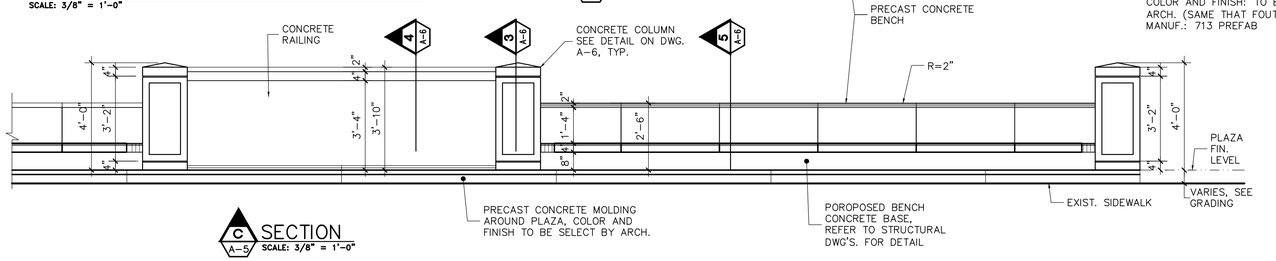

C SECTION
C A-5 SCALE: 3/8" = 1'-0"

REVITALIZATION OF
LUIS MUÑOZ RIVERA PLAZA
IN THE URBAN CENTER
ARECIBO, PUERTO RICO

IGLESIAS • VAZQUEZ and ASSOCIATES
ENGINEERS • ARCHITECTS • PLANNERS
320 FORTALEZA STREET 2nd FLOOR SAN JUAN, PUERTO RICO 00902 TELS. 721-4545 721-4546

SHEET TITLE:
PROPOSED PLAZA
RAILING PLAN AND SETIONS
SCALE: AS SHOWN

CODE NO:
08-903-

DRAWING NO:
A-5

DATE	REVISIONS

SHEET NO:
16
OF
00

N:\Pro\ARECIBO\903 PLAZA ARECIBO\DWG'S\016-017-903A-5-A-6.dwg

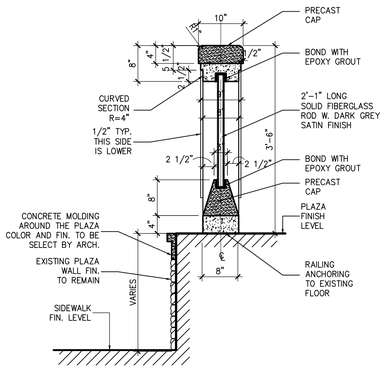

1 A-3 RAILING WALL SECTION
SCALE: 3/4" = 1'-0"

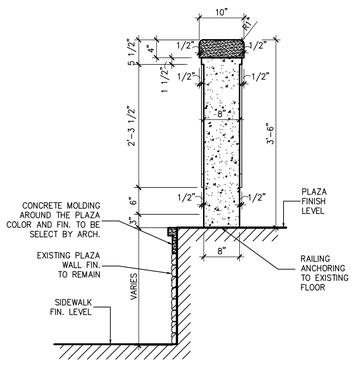

2 A-3 RAILING WALL SECTION
SCALE: 3/4" = 1'-0"

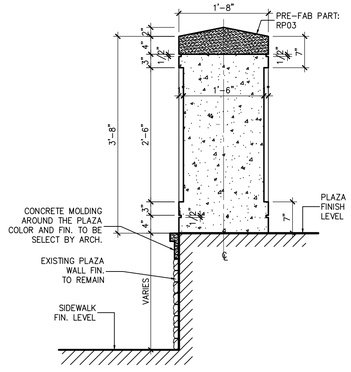

3 A-3 RAILING WALL SECTION
SCALE: 3/4" = 1'-0"

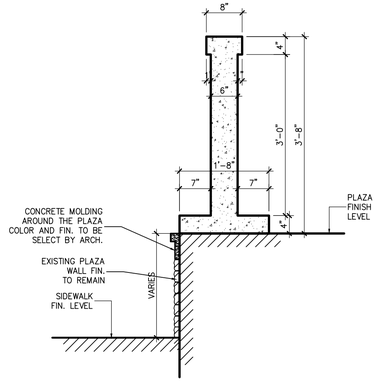

4 A-3 RAILING WALL SECTION
SCALE: 3/4" = 1'-0"

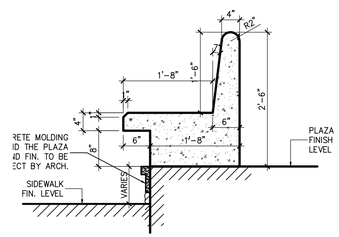

5 A-3 BENCH WALL SECTION
SCALE: 3/4" = 1'-0"

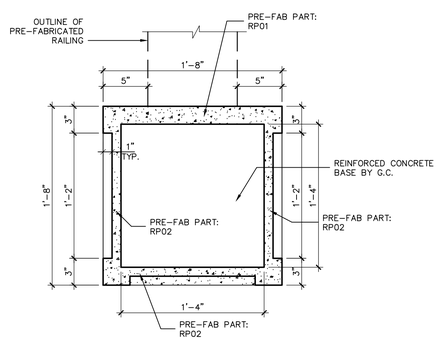

PLAN VIEW: END CONDITION
SCALE: 1 1/2" = 1'-0"

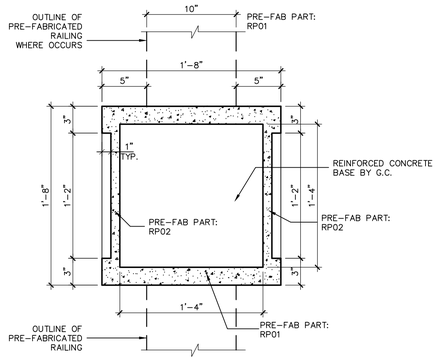

PLAN VIEW: CENTRAL CONDITION
SCALE: 1 1/2" = 1'-0"

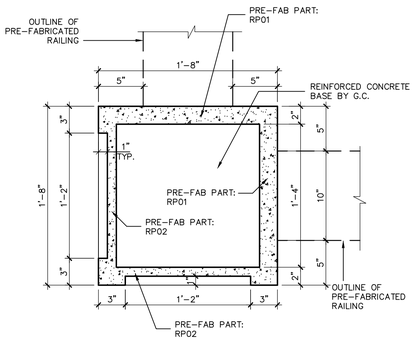

PLAN VIEW: CORNER CONDITION
SCALE: 1 1/2" = 1'-0"

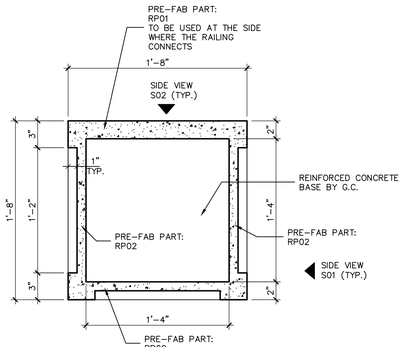

PLAN VIEW

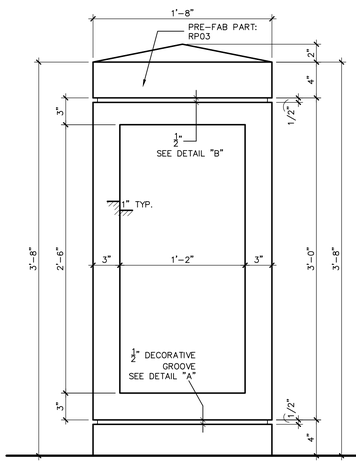

SIDE VIEW S01

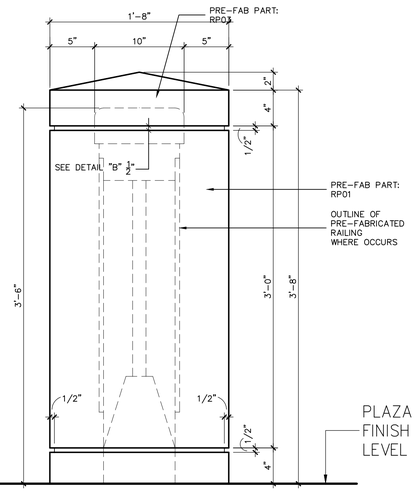

SIDE VIEW S02

PRE-FABRICATED CONCRETE RAILING CENTER MODULE DETAILS
SCALE: 1 1/2" = 1'-0"

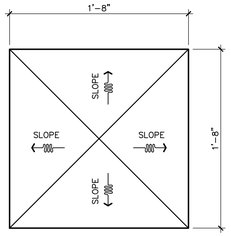

TOP VIEW

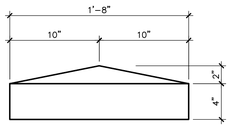

SIDE VIEW

PRE-FABRICATED PART RP03
SCALE: 1 1/2" = 1'-0"

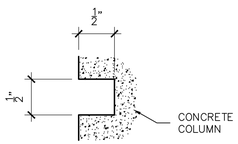

DETAIL "A"
SCALE: FULL

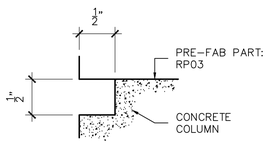

DETAIL "B"
SCALE: FULL

REVITALIZATION OF
LUIS MUÑOZ RIVERA PLAZA
IN THE URBAN CENTER
ARECIBO, PUERTO RICO

IGLESIAS•VAZQUEZ and ASSOCIATES
320 FORTALEZA STREET 2nd FLOOR SAN JUAN, PUERTO RICO 00902 TELS. 721-4545 721-4546
ENGINEERS • ARCHITECTS • PLANNERS

SHEET TITLE:
PROPOSED PLAZA
RAILING WALL SECTION
SCALE: AS SHOWN

CODE NO:
08-903-

DRAWING NO:
A-6

DATE	REVISIONS

SHEET NO:
17
OF
00

N:\Proj\ARECIBO\903 PLAZA ARECIBO\DWG'S\016-017-903A-5-A-6.dwg

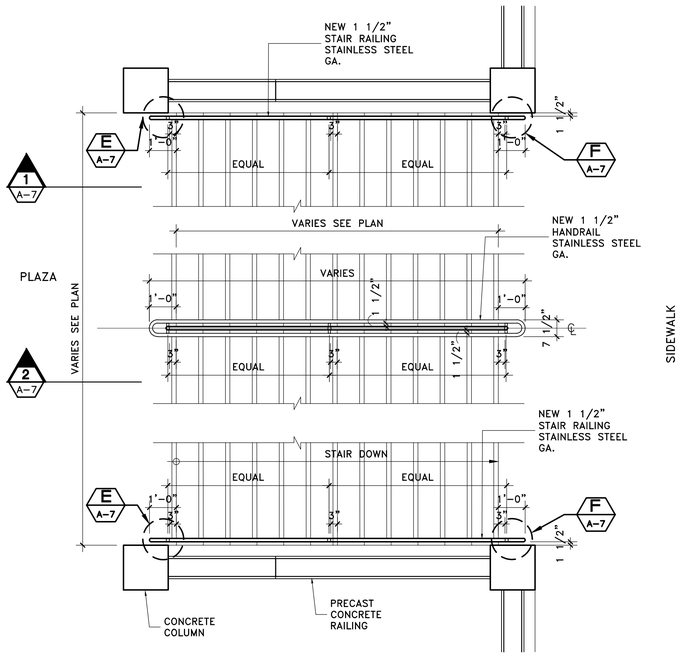

PROPOSED EXISTING TYP. STAIR BLOW UP
SCALE: 3/8" = 1'-0"

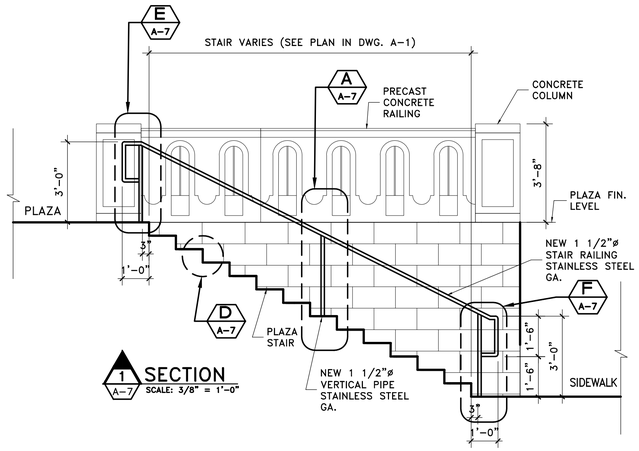

SECTION
SCALE: 3/8" = 1'-0"

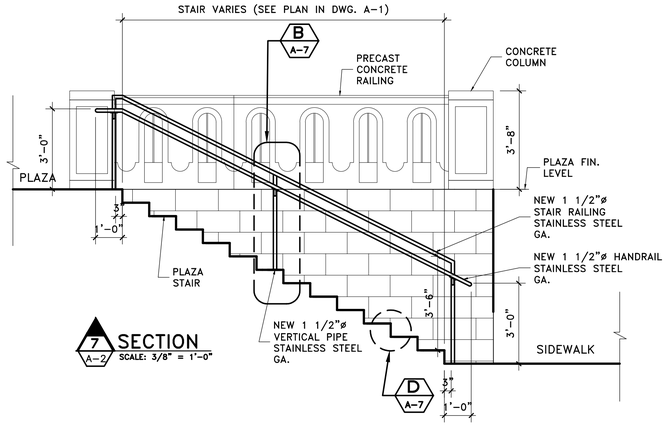

SECTION
SCALE: 3/8" = 1'-0"

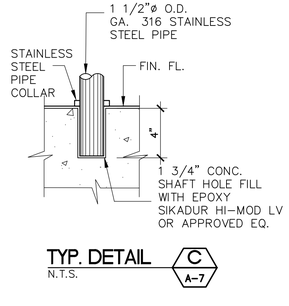

TYP. DETAIL
N.T.S.

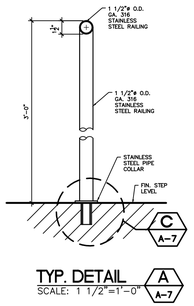

TYP. DETAIL
SCALE: 1 1/2"=1'-0"

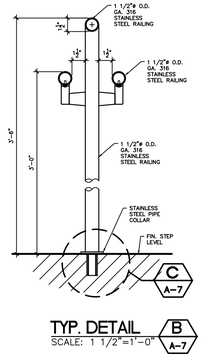

TYP. DETAIL
SCALE: 1 1/2"=1'-0"

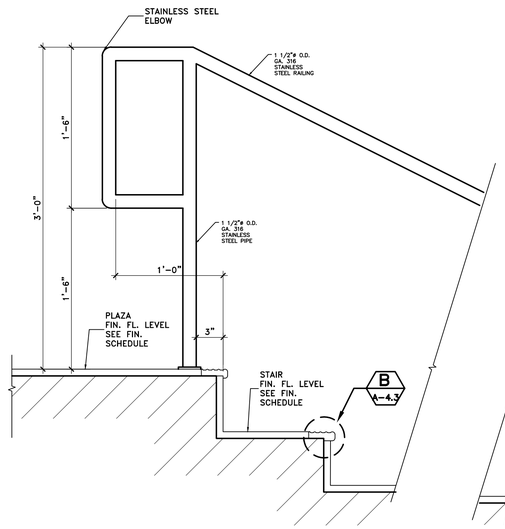

TYP. TOP HANDRAIL EXTENSION DETAIL
SCALE: 1 1/2"=1'-0"

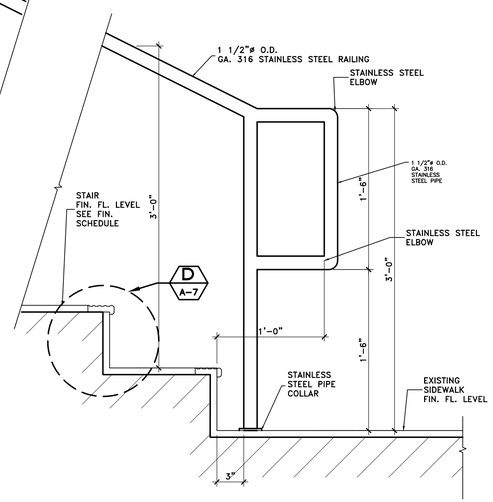

TYP. BOTTOM HANDRAIL EXTENSION DETAIL
SCALE: 1 1/2"=1'-0"

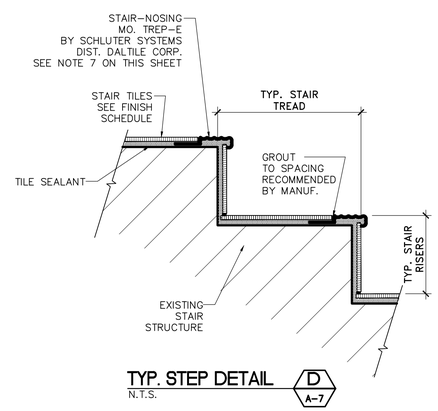

TYP. STEP DETAIL
N.T.S.

IGLESIAS•VAZQUEZ and ASSOCIATES
ENGINEERS • ARCHITECTS • PLANNERS
320 FORTALEZA STREET 2nd FLOOR SAN JUAN, PUERTO RICO 00902 TELS. 721-4545 721-4546

REVITALIZATION OF
LUIS MUÑOZ RIVERA PLAZA
IN THE URBAN CENTER
ARECIBO, PUERTO RICO

SHEET TITLE:
PROPOSED TYP. EXISTING STAIR BLOW UP AND RAILING DETAILS
SCALE: AS SHOWN

CODE NO:
08-903-

DRAWING NO:
A-7

DATE	REVISIONS

SHEET NO:
18
OF
00

N:\Proj\ARECIBO\903 PLAZA ARECIBO\DWG'S\018-903A-7 STAIR DETAILS.dwg

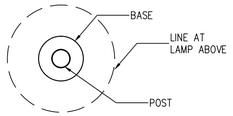

TOP VIEW

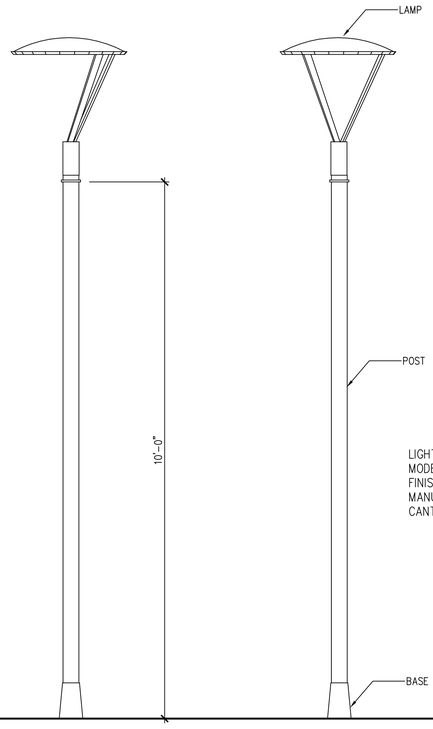

LIGHT POST
MODEL:
FINISH:
MANUF.:
CANT.:

FRONT VIEW LATERAL VIEW

PLAZA LIGHT POLE DETAILS
SCALE: 3/4"=1'-0"

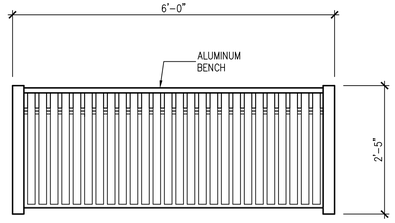

PLAN

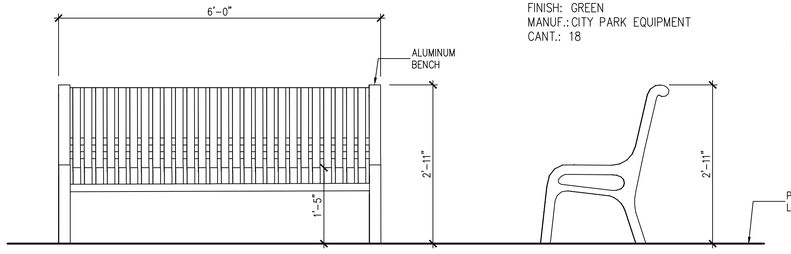

BENCH
MODEL: TOWNE SQUARE BENCH
FINISH: GREEN
MANUF.: CITY PARK EQUIPMENT
CANT.: 18

FRONT VIEW LATERAL VIEW

PLAZA BENCH DETAILS
SCALE: 3/4"=1'-0"

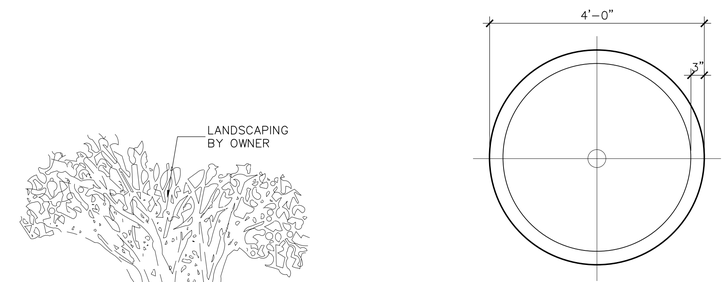

SIDE VIEW

TOP VIEW

PLANTER
MODEL: PL-9
FINISH: BY ARCHITECT
MANUF.: 713 PRECAST, LLC
CANT.: 2

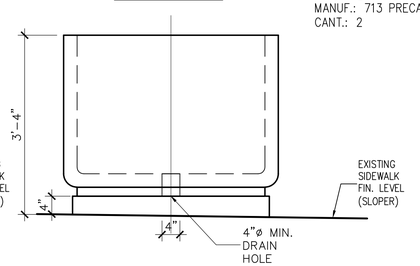

FRONT VIEW

PLANTING DETAILS ON (CATEDRAL SAN FELIPE APOSTOL)
SCALE: 3/4"=1'-0"

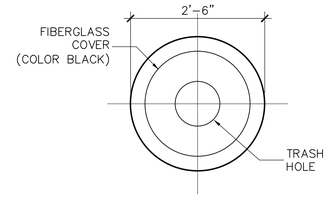

TOP VIEW

TRASH CAN
MODEL: TR-9
FINISH: BY ARCHITECT
MANUF.: 713 PRECAST, LLC
CANT.: 12

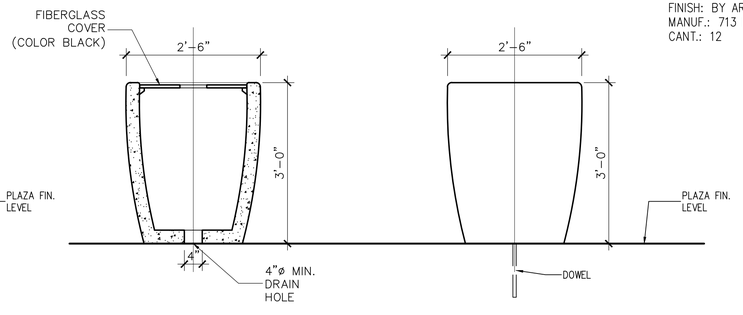

SIDE VIEW FRONT VIEW

PLAZA TRASH CAN DETAILS
SCALE: 3/4"=1'-0"

REVITALIZATION OF
LUIS MUÑOZ RIVERA PLAZA
IN THE URBAN CENTER
ARECIBO, PUERTO RICO

IGLESIAS•VAZQUEZ and ASSOCIATES
ENGINEERS • ARCHITECTS • PLANNERS
320 FORTALEZA STREET 2nd FLOOR SAN JUAN, PUERTO RICO 00902 TELS. 721-4545 721-4546

SHEET TITLE:
PROPOSED PLAZA MISCELLANEOUS DETAILS
SCALE: AS SHOWN

CODE NO:
08-903-

DRAWING NO:
A-8

DATE	REVISIONS

SHEET NO:
19
OF
00

N:\Proj\ARECIBO\903 PLAZA ARECIBO\DWG'S\019-020-903A-8-A-9.dwg

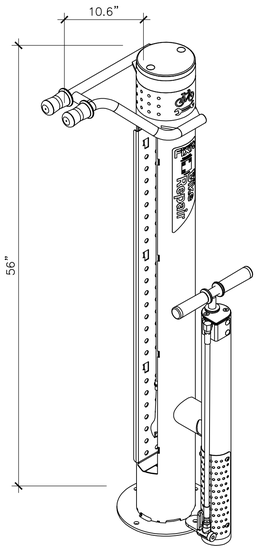

FRONT VIEW

FIXIT PLUS WITH AIR PRIME
MODEL: 509-2001 W/AIR PRIME
FINISH: GALVANISE
MANUF.: THEPARK
CANT.: 1

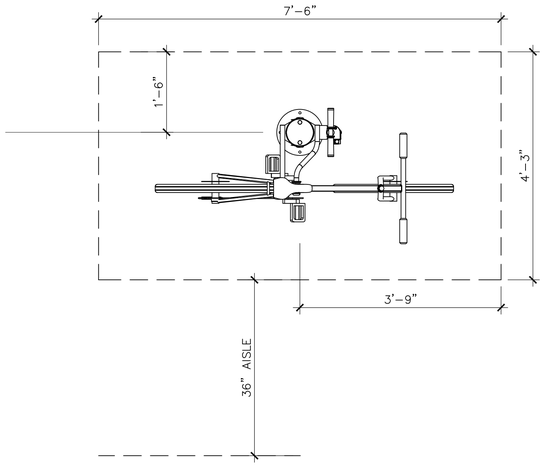

TOP VIEW

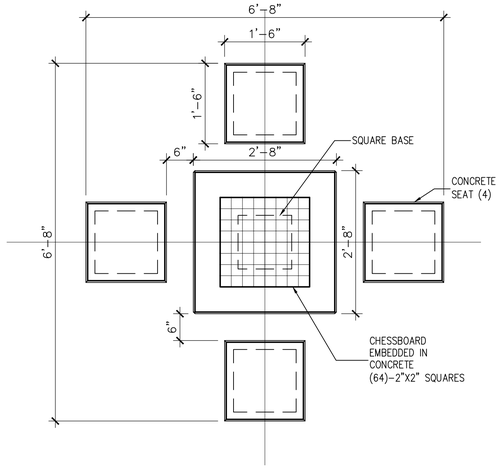

TOP VIEW

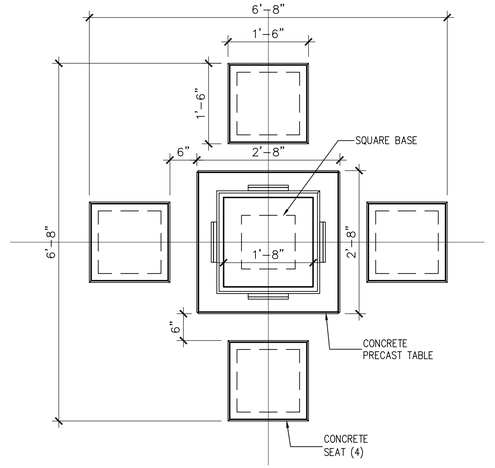

TOP VIEW

PLAZA FIXIT PLUS WITH AIR PRIME DETAILS
SCALE: 1/2"=1'-0"

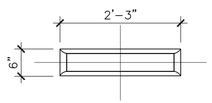

TOP VIEW

BIKE RACK
MODEL: BR-1
FINISH: NATURAL CONCRETE
MANUF.: 713 PRECAST, LLC
CANT.: 2

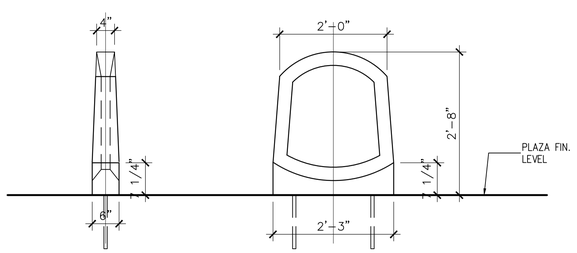

SIDE VIEW FRONT VIEW

PLAZA BIKE RACK DETAILS
SCALE: 1/2"=1'-0"

PRECAST TABLE AND SEAT
MODEL: TL-1 CUSTOM (CHESSBOARD EMBEDDED)
FINISH: BY ARCHITECT
MANUF.: 713 PRECAST, LLC
CANT.: 4

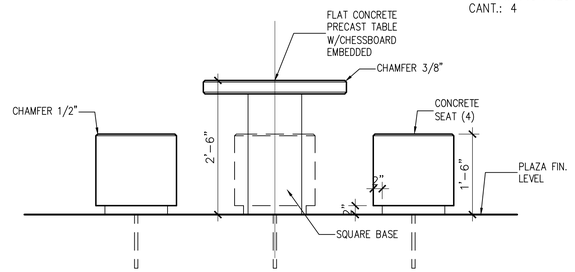

FRONT VIEW

PLAZA CHESS TABLE AND SEAT DETAILS
SCALE: 1/2"=1'-0"

PRECAST TABLE AND SEAT
MODEL: TE-6 (CAPICU)
FINISH: BY ARCHITECT
MANUF.: 713 PRECAST, LLC
CANT.: 4

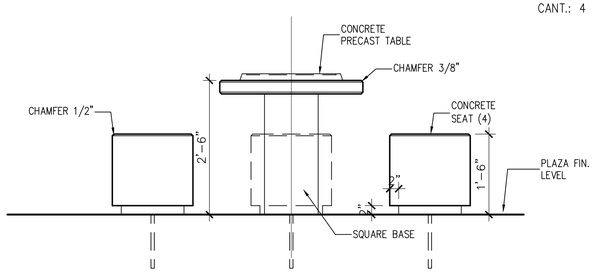

FRONT VIEW

PLAZA DOMINO TABLE AND SEAT DETAILS
SCALE: 1/2"=1'-0"

REVITALIZATION OF
LUIS MUÑOZ RIVERA PLAZA
IN THE URBAN CENTER
ARECIBO, PUERTO RICO

IGLESIAS•VAZQUEZ and ASSOCIATES
ENGINEERS • ARCHITECTS • PLANNERS
320 FORTALEZA STREET 2nd FLOOR SAN JUAN, PUERTO RICO 00902 TELS. 721-4545 721-4546

SHEET TITLE:
PROPOSED PLAZA
MISCELLANEOUS DETAILS
SCALE: AS SHOWN

CODE NO:
08-903-

DRAWING NO:
A-9

DATE	REVISIONS

SHEET NO:
20
OF
00

N:\Proj\ARECIBO\903 PLAZA ARECIBO\DWG'S\019-020-903A-8-A-9.dwg

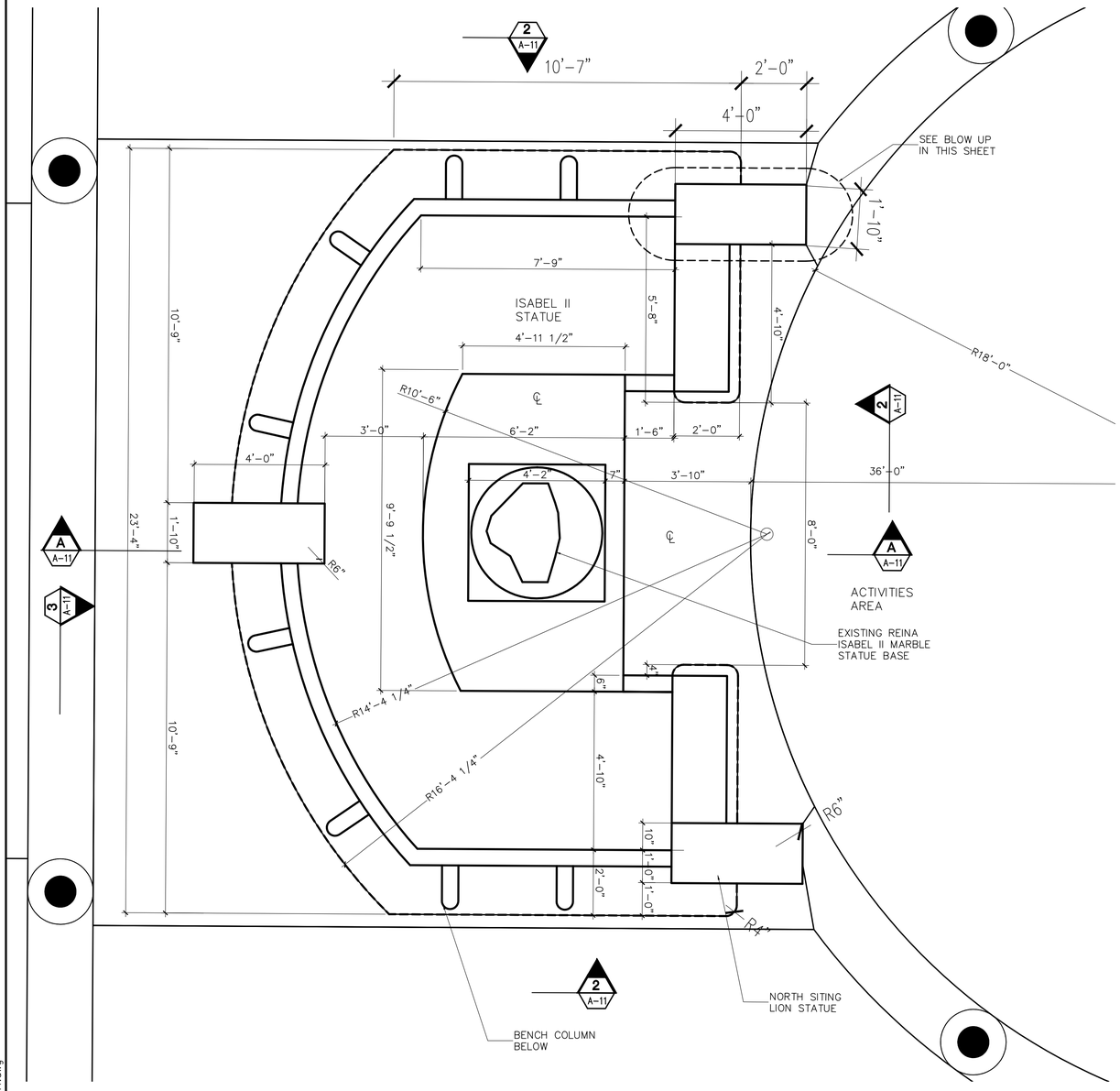

PROPOSED BLOW UP REINA ISABEL II FLOOR PLAN
SCALE: 1/2"=1'-0"

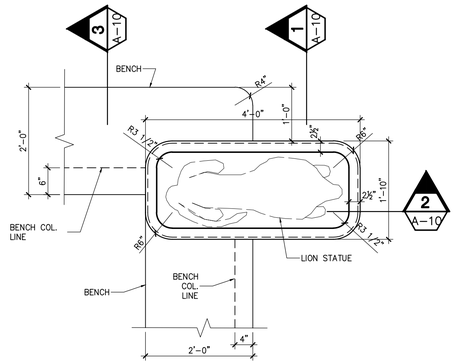

PLAN
SCALE: 3/4" = 1'-0"

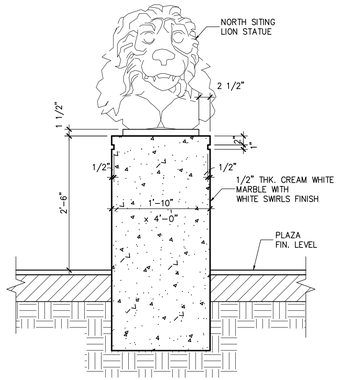

SECTION
SCALE: 3/4" = 1'-0"

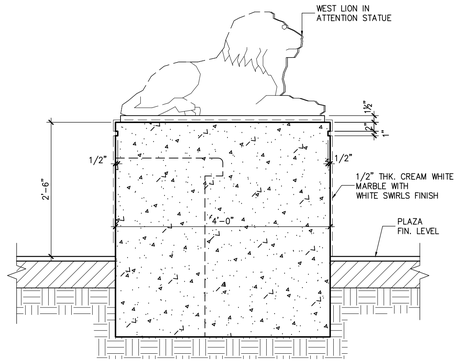

SECTION
SCALE: 3/4" = 1'-0"

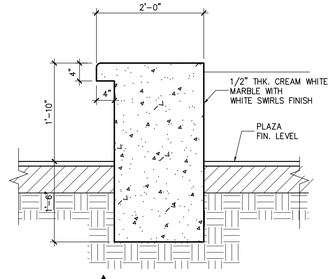

SECTION
SCALE: 3/4" = 1'-0"

PROPOSED LION BASE AND BENCH BLOW UP
SCALE: 1/2"=1'-0"

REVITALIZATION OF
LUIS MUÑOZ RIVERA PLAZA
IN THE URBAN CENTER
ARECIBO, PUERTO RICO

IGLESIAS•VAZQUEZ and ASSOCIATES
320 FORTALEZA STREET 2nd FLOOR SAN JUAN, PUERTO RICO 00902 TELS. 721-4545 721-4546
ENGINEERS • ARCHITECTS • PLANNERS

SHEET TITLE:
PROPOSED BLOW UP
REINA ISABEL II FLOOR PLAN
SCALE: AS SHOWN

CODE NO:
08-903-

DRAWING NO:
A-10

SHEET NO:
21
OF
00

DATE	REVISIONS

N:\Proj\ARECIBO\903 PLAZA ARECIBO\DWG'S\021-0022903A-10-A-11.dwg

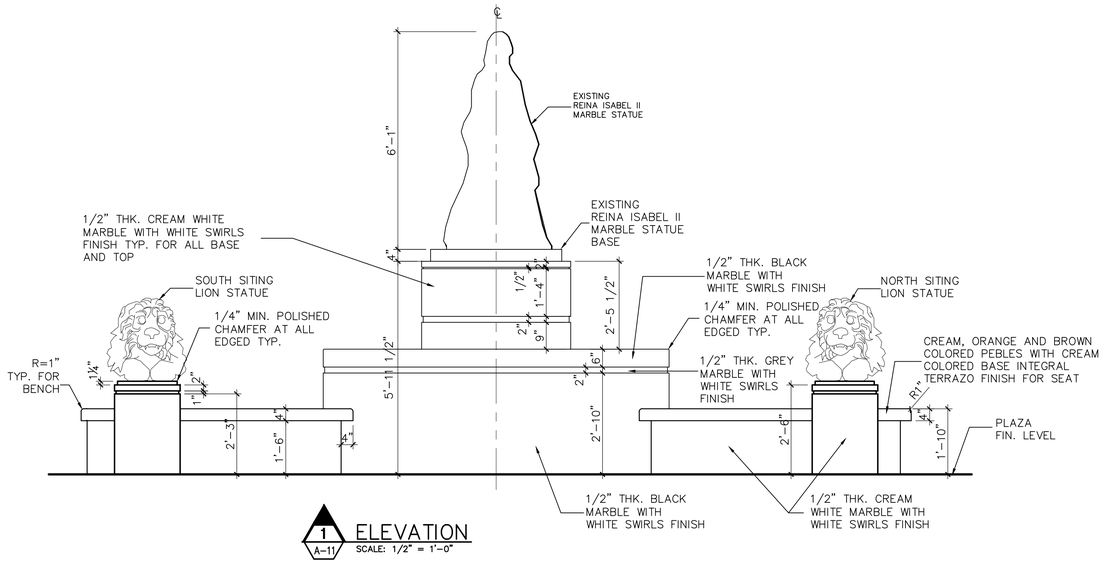

1 A-11 ELEVATION
SCALE: 1/2" = 1'-0"

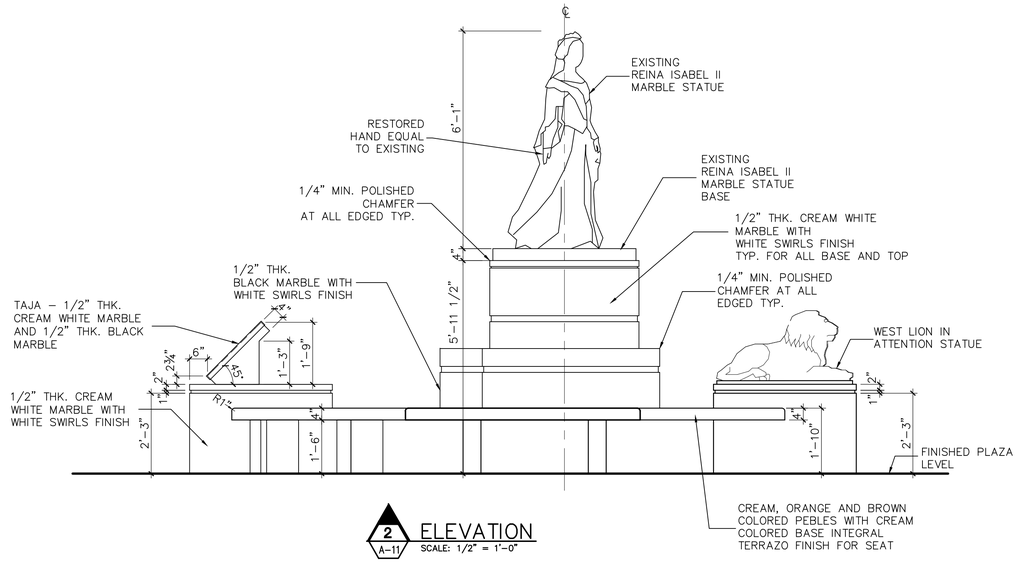

2 A-11 ELEVATION
SCALE: 1/2" = 1'-0"

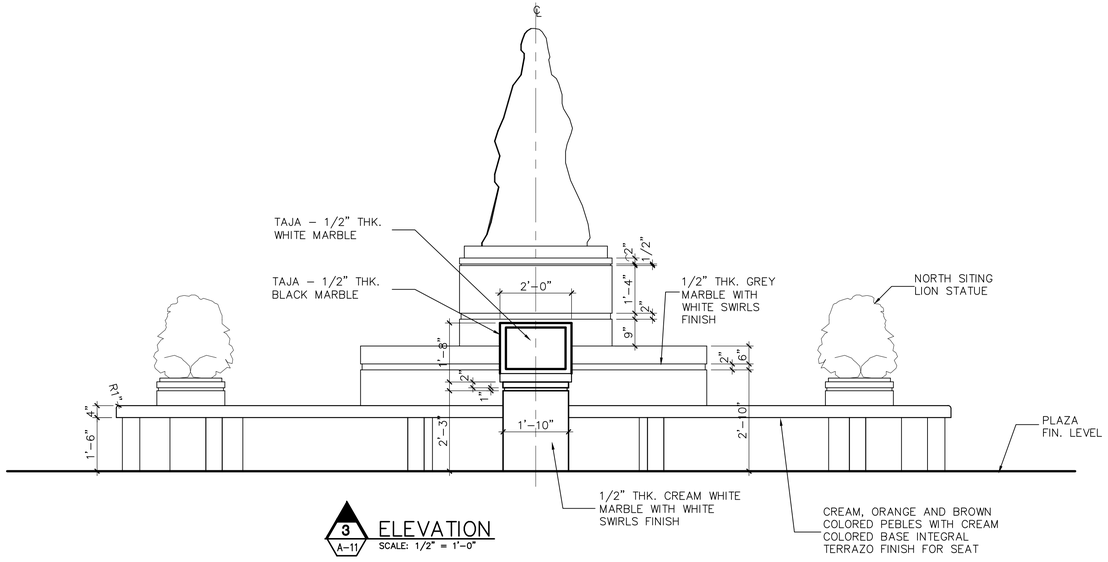

3 A-11 ELEVATION
SCALE: 1/2" = 1'-0"

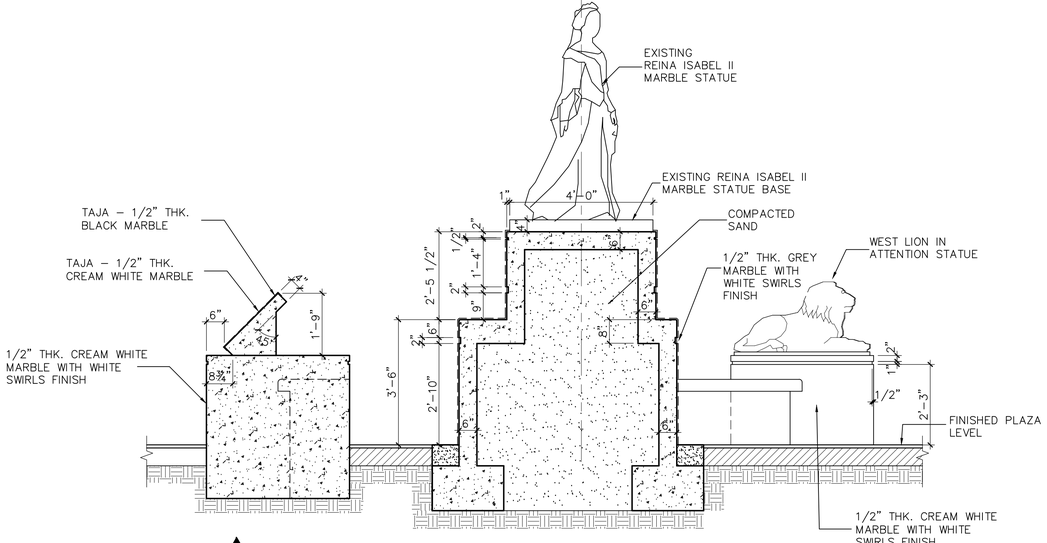

A A-11 SECTION
SCALE: 1/2" = 1'-0"

REVITALIZATION OF
LUIS MUÑOZ RIVERA PLAZA
IN THE URBAN CENTER
ARECIBO, PUERTO RICO

IGLESIAS•VAZQUEZ and ASSOCIATES
ENGINEERS • ARCHITECTS • PLANNERS
350 FORTALEZA STREET 2nd FLOOR SAN JUAN, PUERTO RICO 00902 TELS. 721-4545 721-4546

SHEET TITLE:
PROPOSED ELEVATION AND SECTION
REINA ISABEL II
SCALE: AS SHOWN

CODE NO:
08-903-

DRAWING NO:
A-11

DATE	REVISIONS

SHEET NO:
22
OF
00

N:\Proj\ARECIBO\903 PLAZA ARECIBO\DWG'S\021-0022903A-10-A-11.dwg

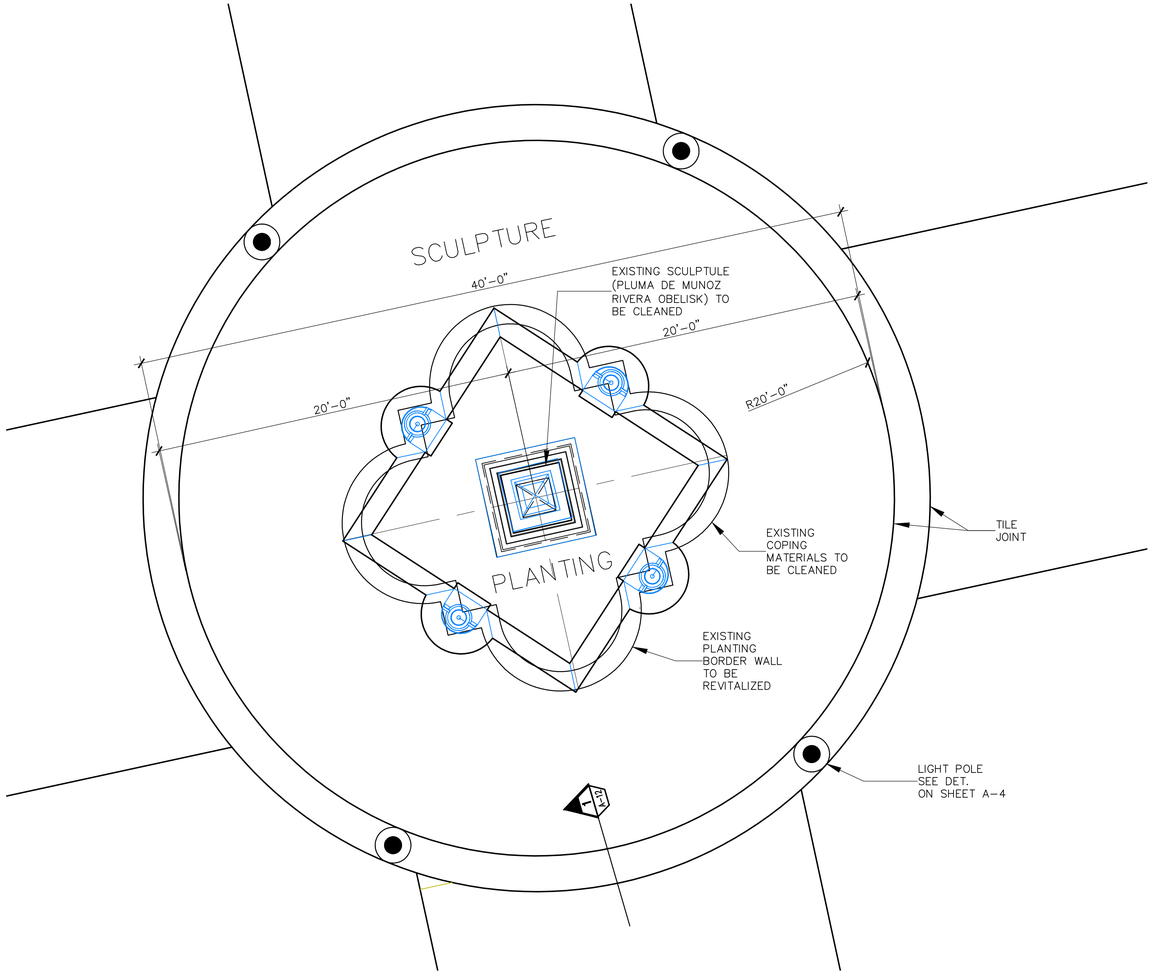

PROPOSED BLOW UP EXISTING SCULPTURE FLOOR PLAN
SCALE: 1/4"=1'-0"

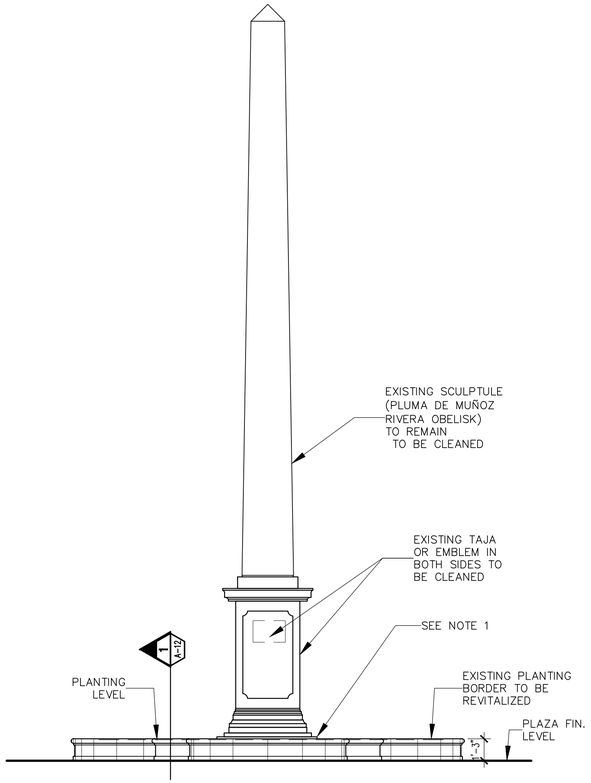

ELEVATION
SCALE: 1/4"=1'-0"

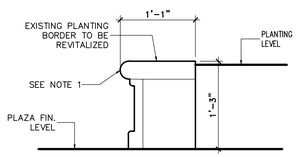

1
A-12
EXIST. OBELISK PLANTER SECTION
SCALE: 1" = 1'-0"

NOTE:

1 - EXISTING COPING MATERIALS TO BE CLEANED AND REVITALIZED

REVITALIZATION OF
LUIS MUÑOZ RIVERA PLAZA
IN THE URBAN CENTER
ARECIBO, PUERTO RICO

IGLESIAS•VAZQUEZ and ASSOCIATES
320 FORTALEZA STREET 2nd FLOOR SAN JUAN, PUERTO RICO 00902 TELS. 721-4545 721-4546
ENGINEERS • ARCHITECTS • PLANNERS

SHEET TITLE:
PROPOSED BLOW UP SCULPTURE
FLOOR PLAN, ELEVATIONS AND DETS.
SCALE: AS SHOWN

CODE NO:
08-903-

DRAWING NO:
A-12

DATE	REVISIONS

SHEET NO:
23
OF
00

N:\Proj\ARECIBO\903 PLAZA ARECIBO\DWG'S\023-903A-12.dwg

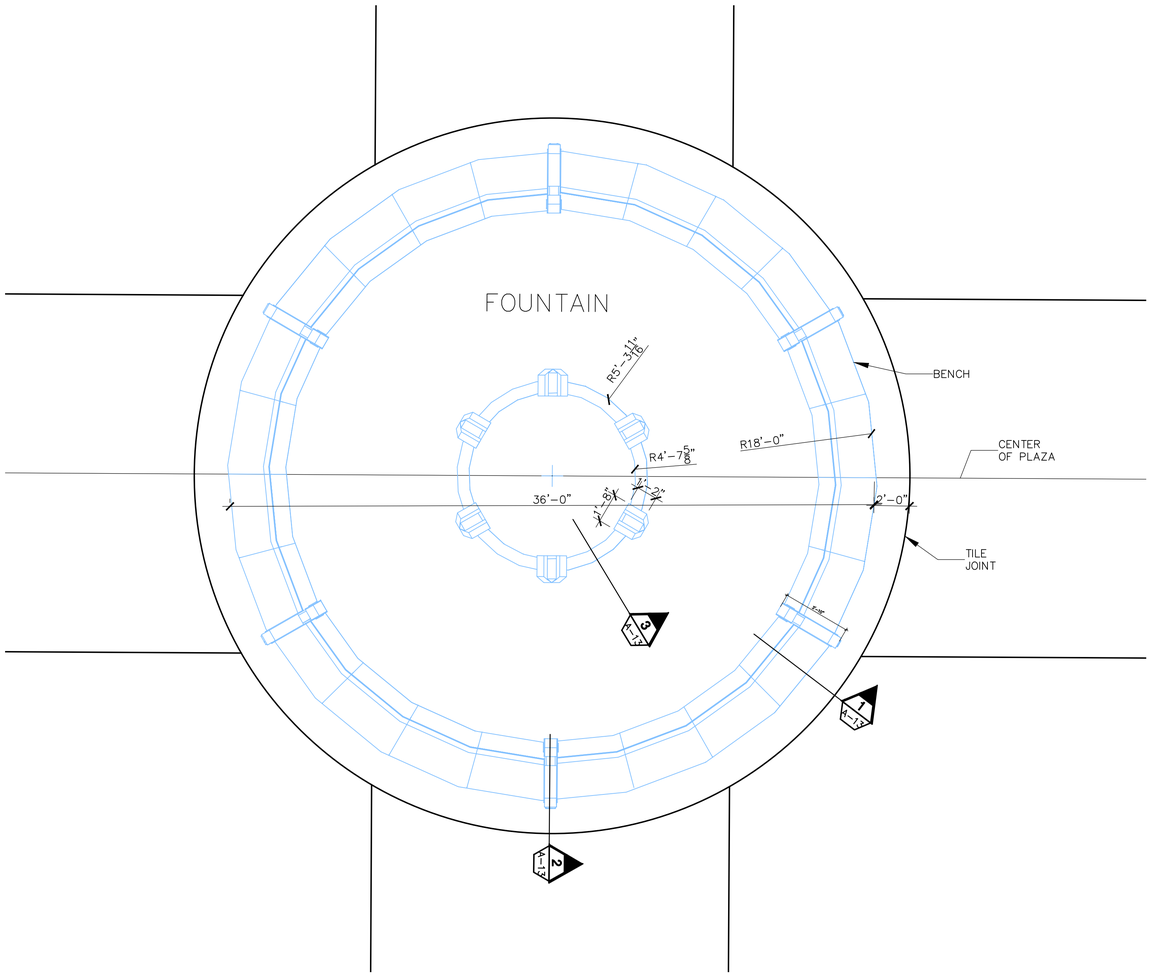

PROPOSED BLOW UP FOUNTAIN FLOOR PLAN
SCALE: 1/4"=1'-0"

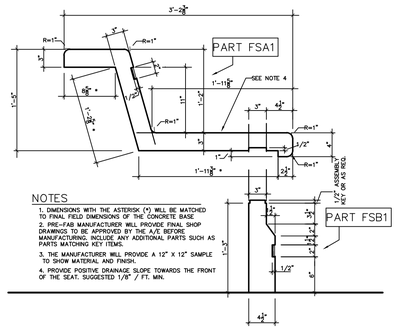

SECTION OF FOUNTAIN SEAT PRE-FAB ASSEMBLY
SCALE: 1" = 1'-0"

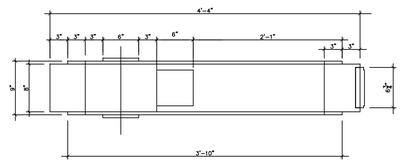

TOP VIEW INTERMEDIATE PRE-FAB ASSEMBLY
SCALE: 1" = 1'-0"

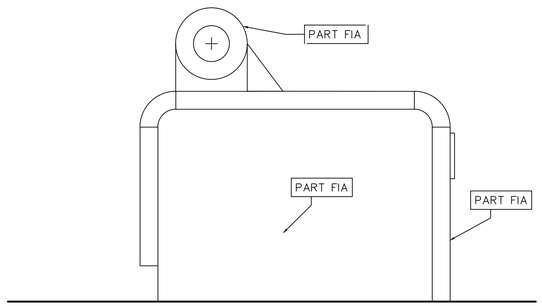

SECTION OF FOUNTAIN INTERMEDIATE PRE-FAB ASSEMBLY
SCALE: 1" = 1'-0"

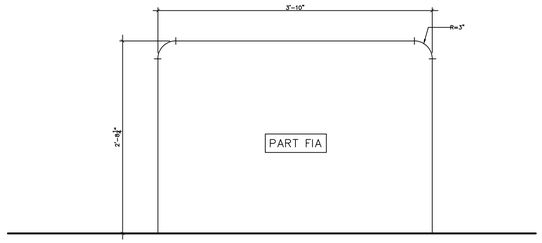

OUT LINE PRE-FAB
SCALE: 1" = 1'-0"

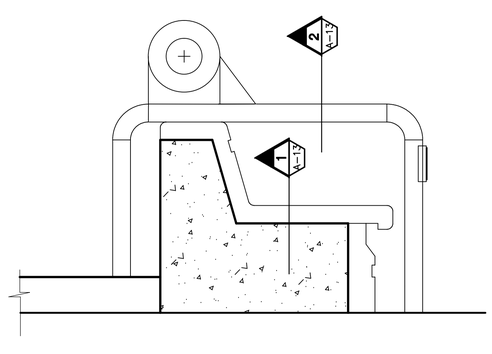

COMPOSITE VIEW INTERMEDIATE PRE-FAB ASSEMBLY
SCALE: 1" = 1'-0"

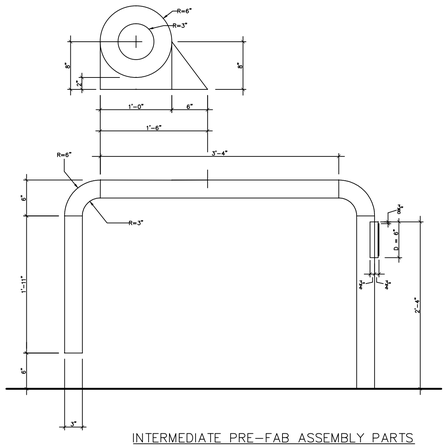

INTERMEDIATE PRE-FAB ASSEMBLY PARTS
SCALE: 1" = 1'-0"

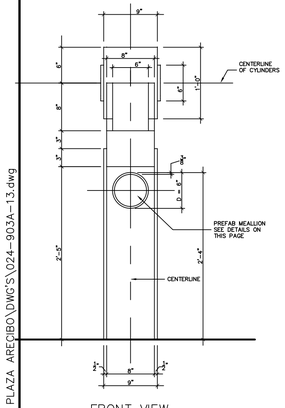

FRONT VIEW
SCALE: 1 1/2" = 1'-0"

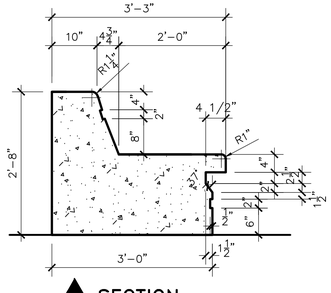

1 A-13 SECTION
SCALE: 3/4" = 1'-0"

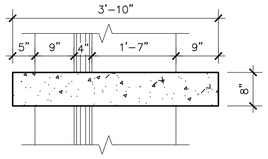

PLAN VIEW
SCALE: 3/4" = 1'-0"

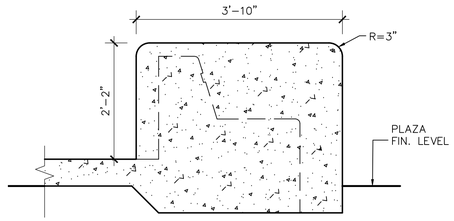

2 A-13 SECTION (PART F1A)
SCALE: 3/4" = 1'-0"

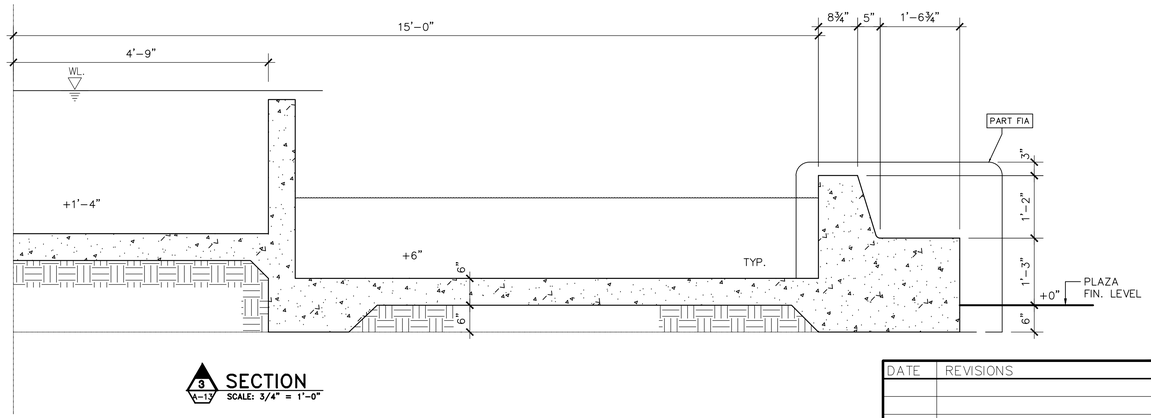

3 A-13 SECTION
SCALE: 3/4" = 1'-0"

DATE	REVISIONS

REVITALIZATION OF
LUIS MUÑOZ RIVERA PLAZA
IN THE URBAN CENTER
ARECIBO, PUERTO RICO

IGLESIAS•VAZQUEZ and ASSOCIATES
ENGINEERS • ARCHITECTS • PLANNERS
320 FORTALEZA STREET 2nd FLOOR SAN JUAN, PUERTO RICO 00902 TELS. 721-4545 721-4546

SHEET TITLE:
PROPOSED BLOW UP FOUNTAIN
FLOOR PLAN, ELEVATION AND DETS.
SCALE: AS SHOWN

CODE NO:
08-903-

DRAWING NO:
A-13

SHEET NO:
24
OF
00

N:\Proj\ARECIBO\903 PLAZA ARECIBO\DWG'S\024-903A-13.dwg

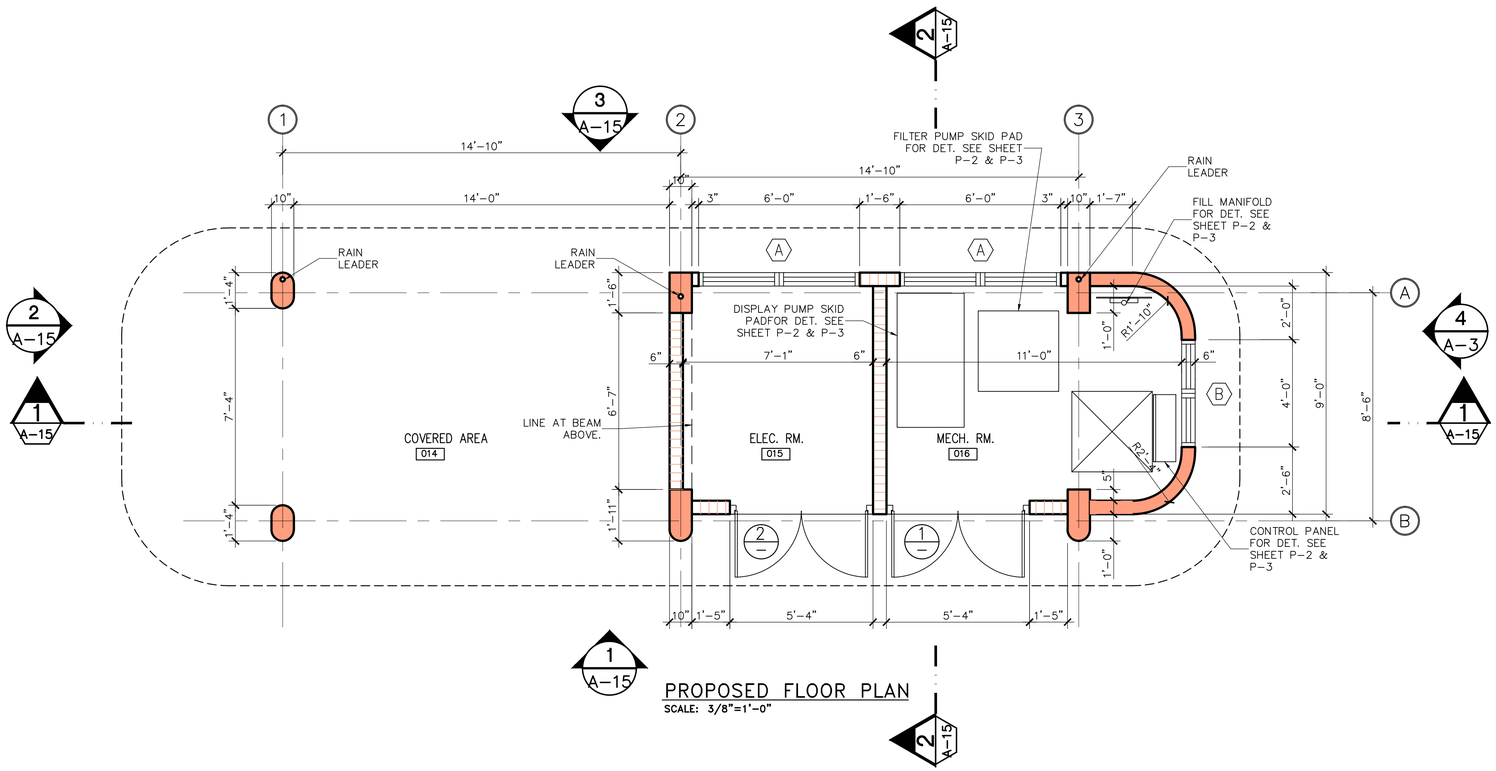

PROPOSED FLOOR PLAN

SCALE: 3/8"=1'-0"

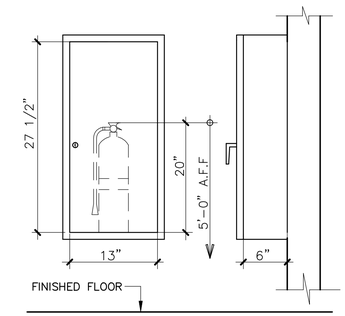

TYP. FIRE EXTINGUISHER CABINET

SCALE: NONE

FIRE EXTINGUISHER SURFACE
MOUNTED CABINET EQ. OR APP.
LARSEN ARCHITECTURAL SERIES
MODEL 2409-SM-WIRE GLASS
DOOR AND FIRE HANDLE, WITH
MP-10 FIRE EXTINGUISHER

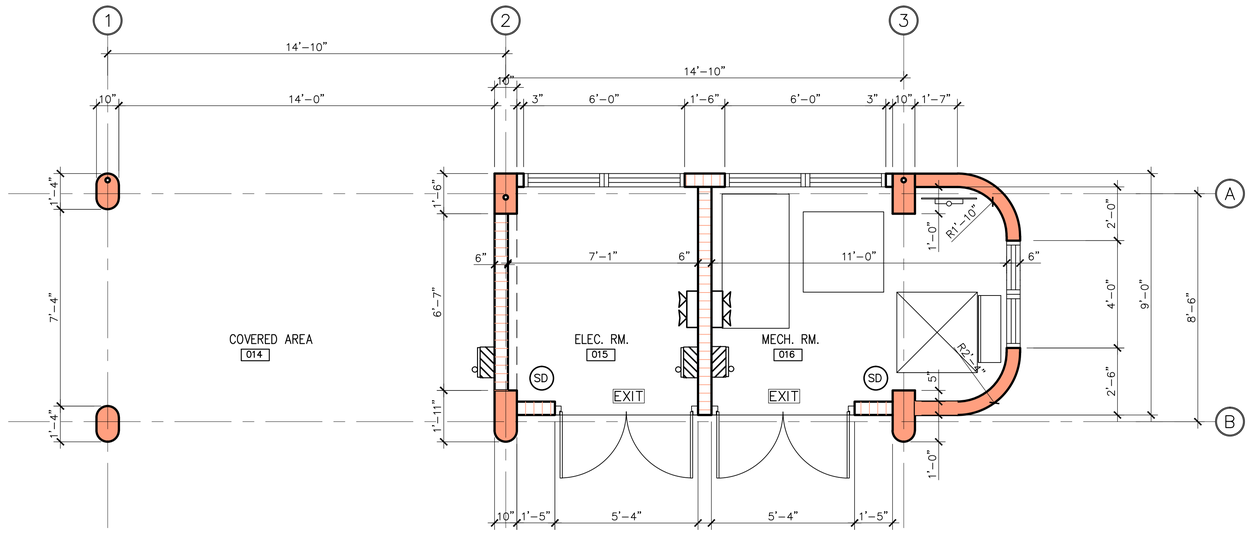

PROPOSED FIRE PROTECTION PLAN

SCALE: 3/8"=1'-0"

FIRE ALARM SYSTEM LEGEND

SD — ADDRESSABLE IONIZATION SMOKE DETECTOR EQUAL TO EQUAL OR SIMILAR TO HONEYWELL MO. ASD-PL3R - BASE MO. B501 SUBMIT FOR APPROVE.

FIRE EXTINGUISHER (SEE TYPICAL DETAIL ON THIS SHEET)

WALL EMERGENCY LIGHT W/ BATTERY BACK UP SEE ELECT. DWG.

EXIT — EXIST SIGN MC PHILBEN / LED ER55L-1-WB-R

REVITALIZATION OF LUIS MUÑOZ RIVERA PLAZA IN THE URBAN CENTER
ARECIBO, PUERTO RICO

IGLESIAS•VAZQUEZ and ASSOCIATES
320 FORTALEZA STREET 2nd FLOOR SAN JUAN, PUERTO RICO 00902 TELS. 721-4545 721-4546
ENGINEERS • ARCHITECTS • PLANNERS

SHEET TITLE: PROPOSED FLOOR & FIRE PROTEC. PLANS MECH. AND ELECT. ROOM
SCALE: AS SHOWN

CODE NO: 08-903-

DRAWING NO: A-14

DATE	REVISIONS

SHEET NO: 25 OF 00

N:\Proj\ARECIBO\903 PLAZA ARECIBO\DWG'S\025-026-903A-14-A-15.dwg

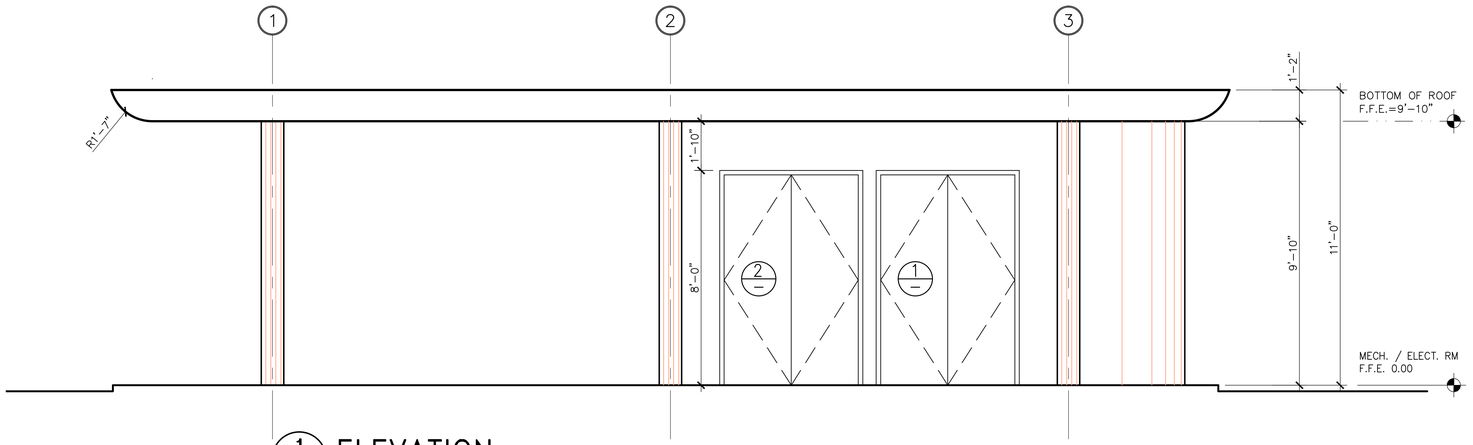

1 / A-15 ELEVATION
SCALE: 3/8" = 1'-0"

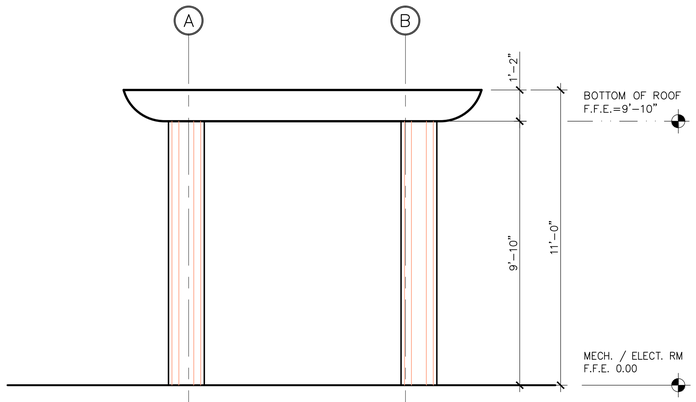

2 / A-15 ELEVATION
SCALE: 3/8" = 1'-0"

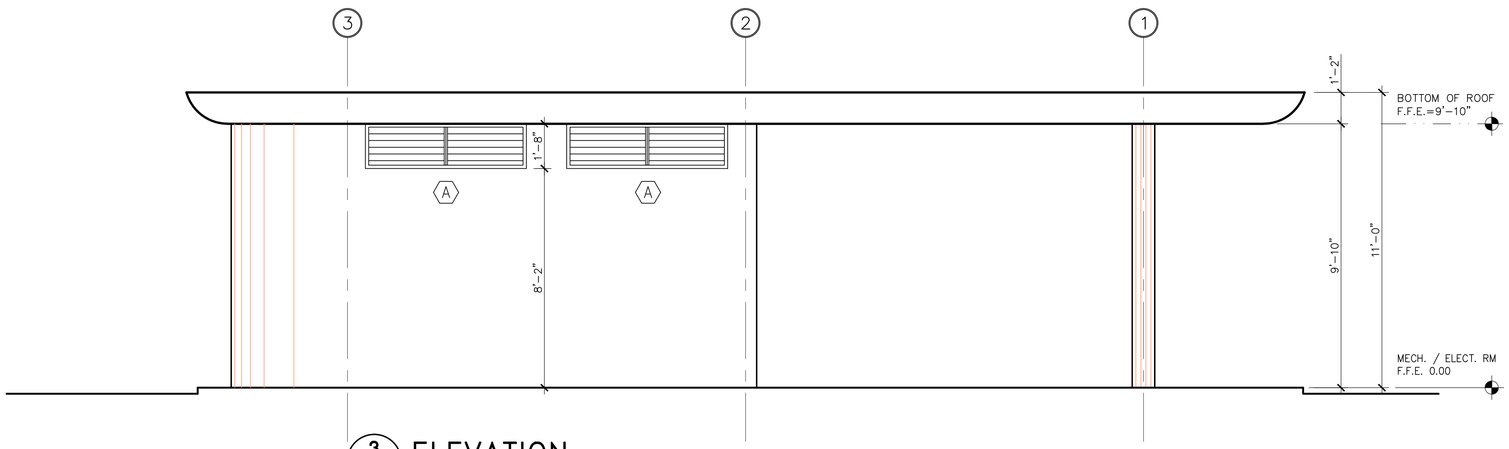

3 / A-15 ELEVATION
SCALE: 3/8" = 1'-0"

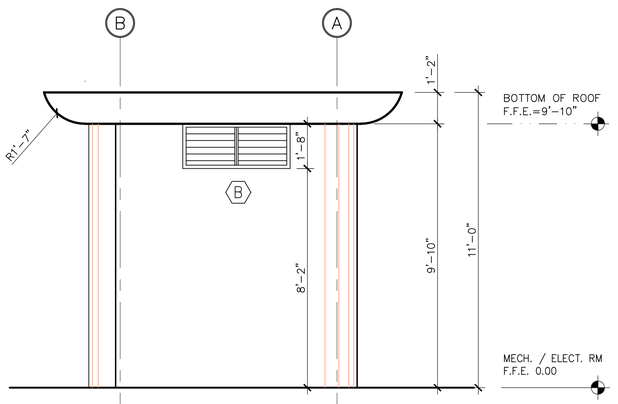

4 / A-15 ELEVATION
SCALE: 3/8" = 1'-0"

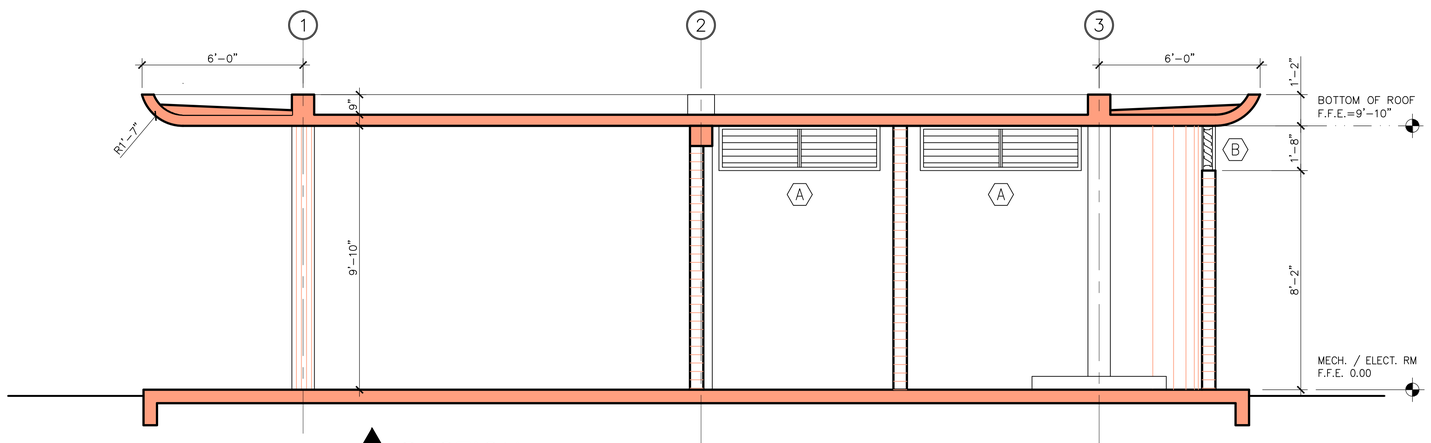

A / A-15 SECTION
SCALE: 1/4" = 1'-0"

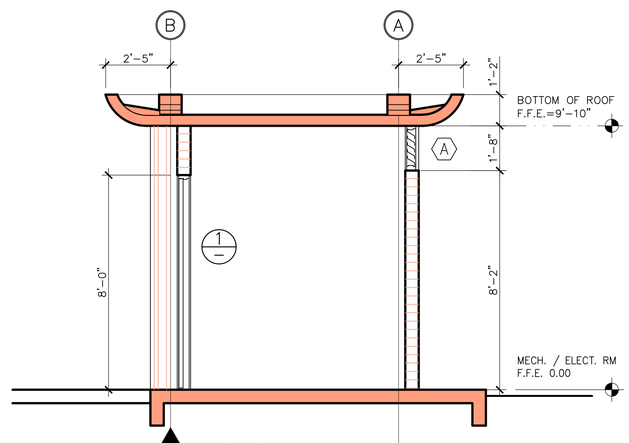

B / A-15 SECTION
SCALE: 1/4" = 1'-0"

REVITALIZATION OF
LUIS MUÑOZ RIVERA PLAZA
IN THE URBAN CENTER
ARECIBO, PUERTO RICO

IGLESIAS•VAZQUEZ and ASSOCIATES
320 FORTALEZA STREET 2nd FLOOR SAN JUAN, PUERTO RICO 00902 TELS. 721-4545 721-4546
ENGINEERS • ARCHITECTS • PLANNERS

SHEET TITLE:
PROPOSED ELEVATIONS & SECTIONS
MECH. AND ELECT. ROOM
SCALE: AS SHOWN

CODE NO:
08-903-

DRAWING NO:
A-15

SHEET NO:
26
OF
00

DATE	REVISIONS

N:\Proj\ARECIBO\903 PLAZA ARECIBO\DWG'S\025-026-903A-14-A-15.dwg

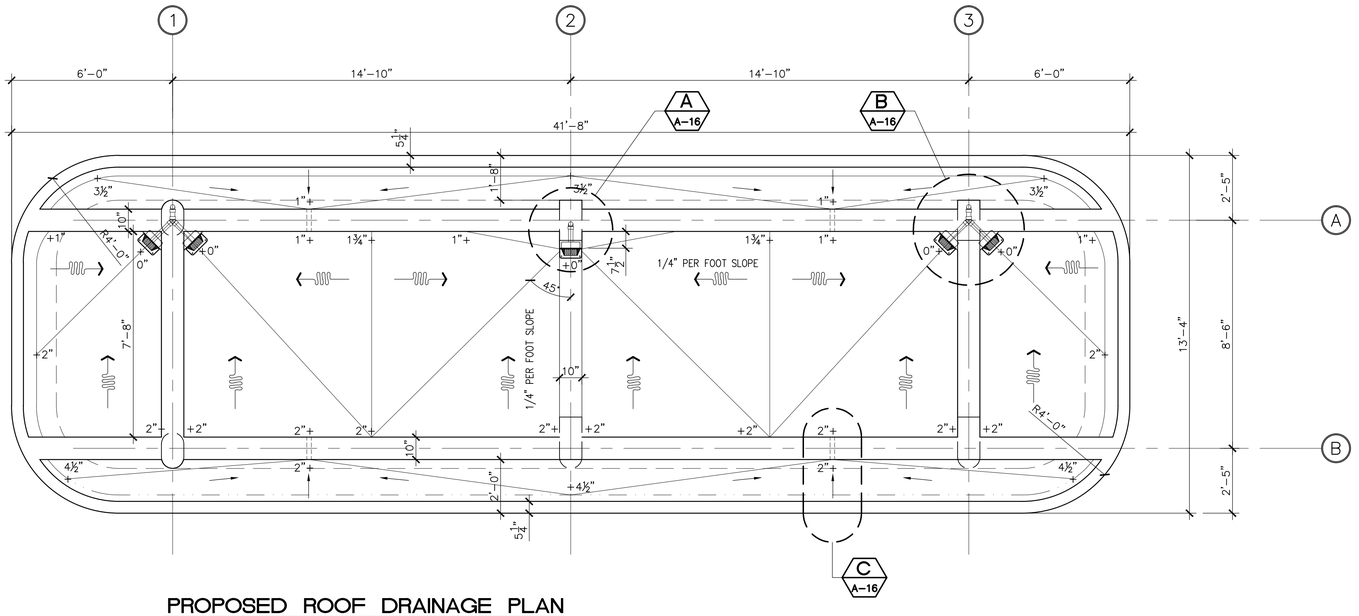

PROPOSED ROOF DRAINAGE PLAN

SCALE: 3/8"=1'-0"

NOTES:

1. FLUID WATER PROOFING APPLIES EQ. OR APP. EQ. TO HYDRO-STOP INC. REFER TO SPEC. ROOFING SECTION.
2. ALL FLASHING SHALL BE DESIGNED FOR THE APPLICABLE CONDITIONS. METAL THICKNESS, FASTENERS, AND LAPPING ALL BE AS SPECIFIED BY THE ROOF MANUFACTURER.
3. REFER TO THE SPECIFICATIONS FOR SPECIFIC EXECUTION REQUIREMENTS.
4. REFER TO TECHNICAL SPECIFICATION NO.07712 FLUID APPLIED ROOFING. (OVER LIGHTWEIGHT CONCRETE).

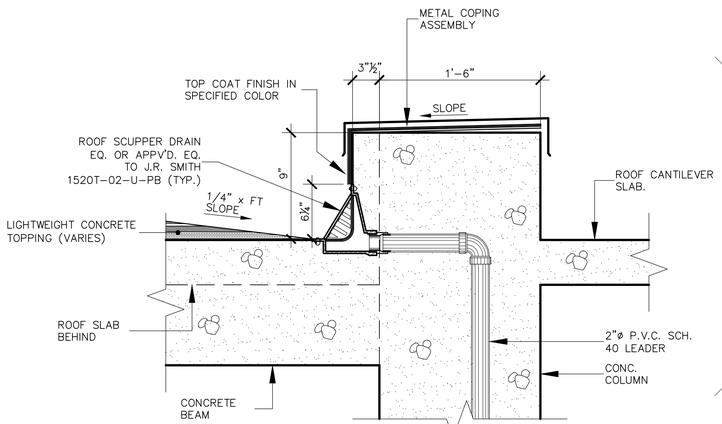

SECTION

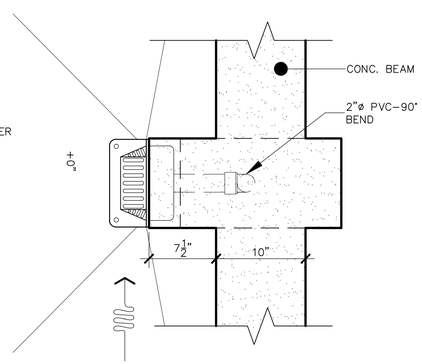

TOP VIEW PLAN

ROOF DRAIN DETAIL A

SCALE: 1 1/2"=1'-0"

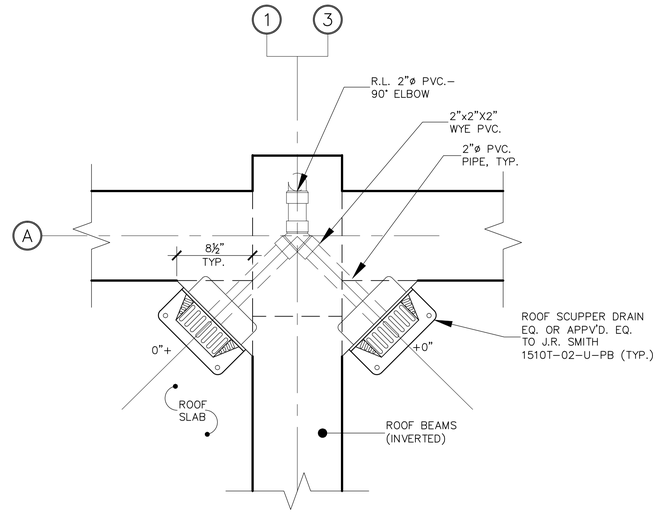

ROOF DRAIN BLOW-UP DETAIL B

SCALE: 1 1/2"=1'-0"

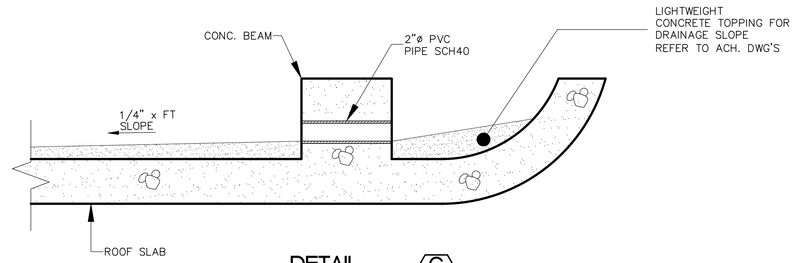

DETAIL C

SCALE: 1 1/2"=1'-0"

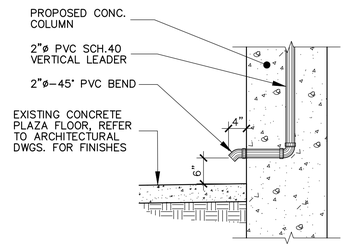

DOWN SPOT DETAIL D

SCALE: 3/4"=1'-0"

IGLESIAS•VAZQUEZ and ASSOCIATES
320 FORTALEZA STREET 2nd FLOOR SAN JUAN, PUERTO RICO 00902 TELS. 721-4545 721-4546
ENGINEERS • ARCHITECTS • PLANNERS

REVITALIZATION OF
LUIS MUÑOZ RIVERA PLAZA
IN THE URBAN CENTER
ARECIBO, PUERTO RICO

SHEET TITLE:
PROPOSED ROOF DRAINAGE PLAN
SCALE: AS SHOWN

CODE NO:
08-903-

DRAWING NO:
A-16

DATE	REVISIONS

SHEET NO:
27
OF
00

N:\Proj\ARECIBO\903 PLAZA ARECIBO\DWG'S\027-903A-16.dwg

DOORS SCHEDULE

D / 4 DOOR HARDWARE		DOOR								FRAME				REMARKS
		DOOR SIZE		MASONRY OPNG.		TRANSOME		PROPERTIES						
NO.	TYPE	WIDTH	HEIGHT	WIDTH	HEIGHT	WIDTH	HEIGHT	MATERIAL	GAUGE	GAUGE	MATERIAL	JAMB	HEAD	
1	I	5'–4"	7'–10"	5'–0"	8'–0"	–	–	ALUM.		N/A	ALUM.	–	–	
2	II	5'–4"	7'–10"	5'–0"	8'–0"	–	–	ALUM.		N/A	ALUM.	–	–	

NOTES ON DOORS:

1. FOR HARDWARE SCHEDULE REFER TO TECHNICAL SPECIFICATION.
2. FOR METAL DOORS & FRAME REFER TO TECHNICAL SPECIFICATION.
3. FOR ALUMINUM GLASS DOORS & FRAME EQUAL OR APPROVED EQUAL TO AIR MASTER AWNING, GLASS COLOR TO BE SELECT BY OWNER
4. FOR ALL DOOR SUBMIT SAMPLE AND SHOP DRAWING.

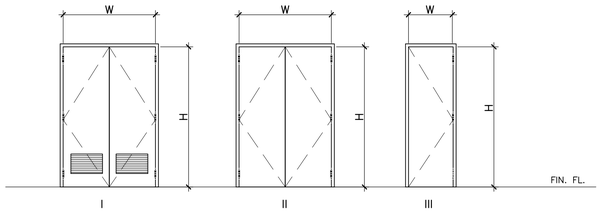

DOORS TYPE

WINDOWS SCHEDULE

MRK'D	WINDOW TYPE	MASONRY OPENING		WINDOW SIZE			QUANTITY	REMARKS
		WIDTH	HEIGHT	WIDTH	HEIGHT	MATERIAL		
A	I	6'–0"	1'–8"			ALUMINUM	2	LOUVERS TYPE Z
B	I	4'–0"	1'–8"			ALUMINUM	2	LOUVERS TYPE Z

NOTES ON WINDOWS:

1. ALL WINDOW EQUAL OR APPROVED EQUAL TO AIR MASTER AWNING, GLASS COLOR TO BE SELECT BY OWNER.

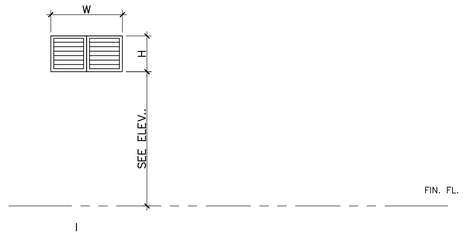

WINDOWS TYPE

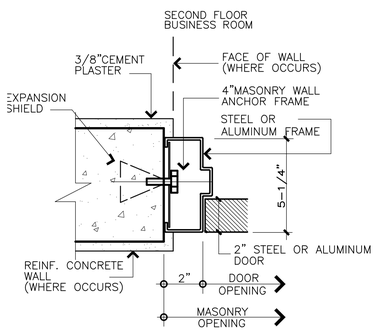

TYP. JAMB DETAIL J-1
NOT TO SCALE

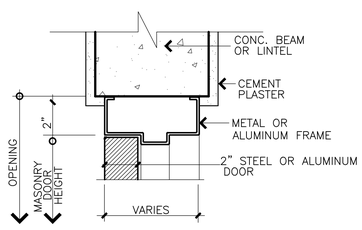

TYP, HEAD DETAIL H-1
NOT TO SCALE

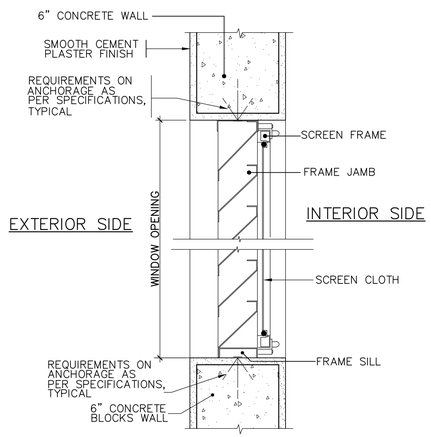

TYP, LOVERS WINDOW DET.
NOT TO SCALE

- 4.625" ALUMINUM JALOUSIES FRAMES WINDOW.
- FRAME SHALL BE BAKED ENAMEL.
- COLOR TO BE SELECTED BY ARCHITECT.

REVITALIZATION OF
LUIS MUÑOZ RIVERA PLAZA
IN THE URBAN CENTER
ARECIBO, PUERTO RICO

IGLESIAS•VAZQUEZ and ASSOCIATES
320 FORTALEZA STREET 2nd FLOOR SAN JUAN, PUERTO RICO 00902 TELS. 721-4545 721-4546
ENGINEERS • ARCHITECTS • PLANNERS

SHEET TITLE: PROPOSED DOORS AND WINDOWS SCHEDULES
SCALE: AS SHOWN

CODE NO: 08-903-

DRAWING NO: A-17

DATE	REVISIONS

SHEET NO: 28 OF 00

N:\Pro1\ARECIBO\903 PLAZA ARECIBO\DWG'S\028-903A-17.dwg

PROPOSED FINISHES SCHEDULE

MK'D.	SPACES	FLOOR												BASE												WALLS								CEILINGS					REMARKS
000		24"X24" FLOOR TILES MO. DIGNITARY COLOR: ——— BY DALTILE	24"X24" FLOOR TILES MO. DIGNITARY COLOR: ——— BY DALTILE	24"X24" FLOOR TILES MO. DIGNITARY COLOR: ——— BY DALTILE	24"X24" FLOOR TILES MO. DIGNITARY COLOR: ——— BY DALTILE	24"X24" FLOOR TILES MO. DIGNITARY COLOR: ——— BY DALTILE	MARBLE TILES COLOR: VARIES	1-3/16"X1" SCHLUTER RSP-E/-ER STAINLESS STEEL SCHIENE, SEE WORK SEC MOE NO. 8	POLISHED CEMENT	EXISTING TO REMAIN	EXISTING TO BE CLEANED AND REVITALIZED	3"X24" BASE MO. DIGNITARY COLOR: ——— BY DALTILE	3"X24" BASE MO. DIGNITARY COLOR: ——— BY DALTILE	3"X24" BASE MO. DIGNITARY COLOR: ——— BY DALTILE	3"X24" BASE MO. DIGNITARY COLOR: ——— BY DALTILE	MARBLE TILES COLOR: VARIES	STAIR RISE AND RAMP CURBES DIM.) TILES AS FLOOR COLOR ——— BY DALTILE	POLISHED CEMENT	EXISTING TO REMAIN	EXISTING TO BE CLEANED AND REVITALIZED	CEMENT PLASTER	PAINT FINISH	MARBLE TILES	POLISHED CEMENT	EXISTING TO REMAIN	EXISTING TO BE CLEANED AND REVITALIZED	CEMENT PLASTER AND PAINT	5/8" GYPSUM BOARD - GLASS MAT PANELS MOLD TOUGH FIRECODE TYPE X - W/WATER RESISTANT PANELS & PAINT	1/2" (12MM) PLYCEM CEILING SYSTEM & PAINT	EXPOSED CEILING (ROOF SLAB)		
PLAZA LEVEL																																						
001	PLAZA	●	●	●								●																											
002	ISABEL II STATUE			●		●										●								●														SEE DETAIL ON SHEET A–
003	ACTIVITIES AREA	●		●																																		
004	SCULPTULE	●		●															●								●	●										SEE DETAIL ON SHEET A–
005	FOUNTAIN								●									●								●												SEE DETAIL ON SHEET A–
006	STAIR –W				●		●									●																						SEE DETAIL ON SHEET A–
007	STAIR –E				●		●									●																						SEE DETAIL ON SHEET A–
008	STAIR – 1				●		●									●																						SEE DETAIL ON SHEET A–
009	STAIR – 2				●		●									●																						SEE DETAIL ON SHEET A–
010	STAIR – 3				●		●									●																						SEE DETAIL ON SHEET A–
011	RAMP – 1				●											●																						SEE DETAIL ON SHEET A–
012	RAMP – 2				●											●																						SEE DETAIL ON SHEET A–
013	RAMP – 3				●											●																						SEE DETAIL ON SHEET A–
014	COVERED AREA	●																●								●								●					SEE DETAIL ON SHEET A–
015	ELECTRICAL ROOM								●									●								●								●					SEE DETAIL ON SHEET A–
016	MECHANICAL ROOM								●									●								●								●					SEE DETAIL ON SHEET A–
017	SIDEWALK									●	●									●	●																		
018																																						
019																																						
020																																						

NOTES ON FINISHES:

1. ALL INTERIOR AND EXTERIOR WALLS MUST BE PAINTED (PPG PAINTS) COLOR TO BE SERECT BY OWNER EXCEPT THOSE THAT ARE GOING TO RECEIVED TILES. REFER TO SPEC'S.
2. ALL CERAMIC AND TILES SHALL BE EQ. OR APP'D EQ. TO DALTILE. BASE AND WALLS TILES BY DALTILE. DALTILE CERAMICS WILL BE SELECTED BY DESIGNER. FOR COLOR AND MODEL SEE FINISH SCHEDULE. GROUTS SPACING TO BE RECOMMENDED BY CERAMIC TILES MANUF. TILES PRODUCTS DISTRIBUTED DAL–TILE CORPORATION PHONE NUMBER (787)791–6618, (787)428–5128 ADRESS: 430 CALLE 2 PALMAS IND. ZONE CATAÑO P.R. 00962
3. ALL DAMAGE EXISTING TILE SHOULD BE REPLACE BY NEW EQ. OR APP'D EQ.TO EXIST NEW TILE.
4. ALL EXIST. CONCRETE CEILING TO BE CEMENT PLASTER WHERE NEEDED AND TO BE PAINT ALL CEILING.
5. WALL AND FLOOR CERAMIC TILE TO BE INSTALL CONTRASTED PATTERN.
6. GROUTS BY MAPEI SEE SPECS. COLORS TO BE SELECT BY DESIGNER.
7. SCHLUTER PRODUCTS BY DAL–TILE CORPORATION PHONE NUMBER (787)791–6618, (787)428–5128 ADRESS: 430 CALLE 2 PALMAS IND. ZONE CATAÑO P.R. 00962

ALUMINUM & STAINLESS STEEL NOTES:

1. ALL ALUMINUM IN THIS PROJECT SHALL BE ALUMINUM 6061–T6.
2. ALL STAINLESS STEEL IN THIS PROJECT SHALL BE STAINLESS STEEL 316.

CEILING NOTES:

1. ALL PLYCEM CEILING 1/2" (12MM) PANELS. PAINTED (PPG PAINTS) COLOR TO BE SELECT BY OWNER.
2. ALL GYPSUM BOARD CEILING – GLASS MAT PANELS MOLD TOUGH 5/8" FIRECODE TYPE X – WITH WATER RESISTANT PANELS. PAINTED (PPG PAINTS) COLOR TO BE SELECT BY OWNERS.

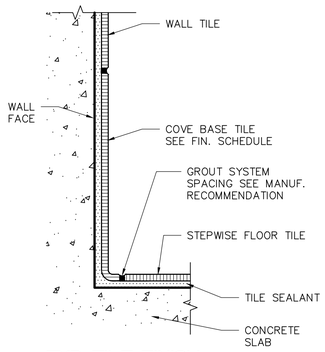

TYP. TILE FINISH COVE BASE DETAIL 1 / A–18
SCALE: 3"=1'–0"

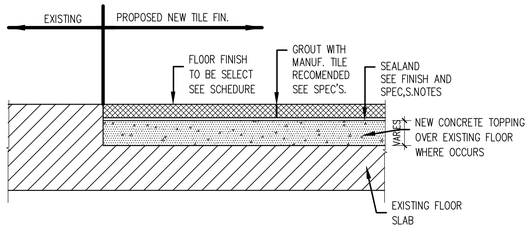

TYPICAL FLOOR FINISH DETAIL

NOT TO SCALE

NOTE:
THE CONTRACTOR WILL BE RESPONSIBLE FOR PREPARING THE FLOOR BEFORE NEW FLOOR TOPPING AND FINISH.

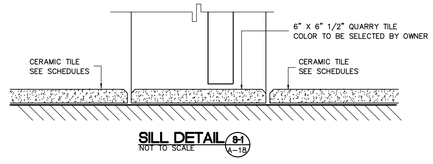

SILL DETAIL 9+1 / A–18
NOT TO SCALE

REVITALIZATION OF
LUIS MUÑOZ RIVERA PLAZA
IN THE URBAN CENTER
ARECIBO, PUERTO RICO

IGLESIAS•VAZQUEZ and ASSOCIATES
320 FORTALEZA STREET 2nd FLOOR SAN JUAN, PUERTO RICO 00902 TELS. 721–4545 721–4546
ENGINEERS • ARCHITECTS • PLANNERS

SHEET TITLE:
PROPOSED FINISHES SCHEDULES
NOTES AND DETAILS
SCALE: AS SHOWN

CODE NO:
08–903–

DRAWING NO:
A–18

DATE	REVISIONS

SHEET NO:
29
OF
00

N:\Arch\Archivos de Trabajo\08-903 PLAZA ARECIBO\Dibujos\Arquitectura\A-18 FINISHES SCHEDULES.dwg July 16, 2024

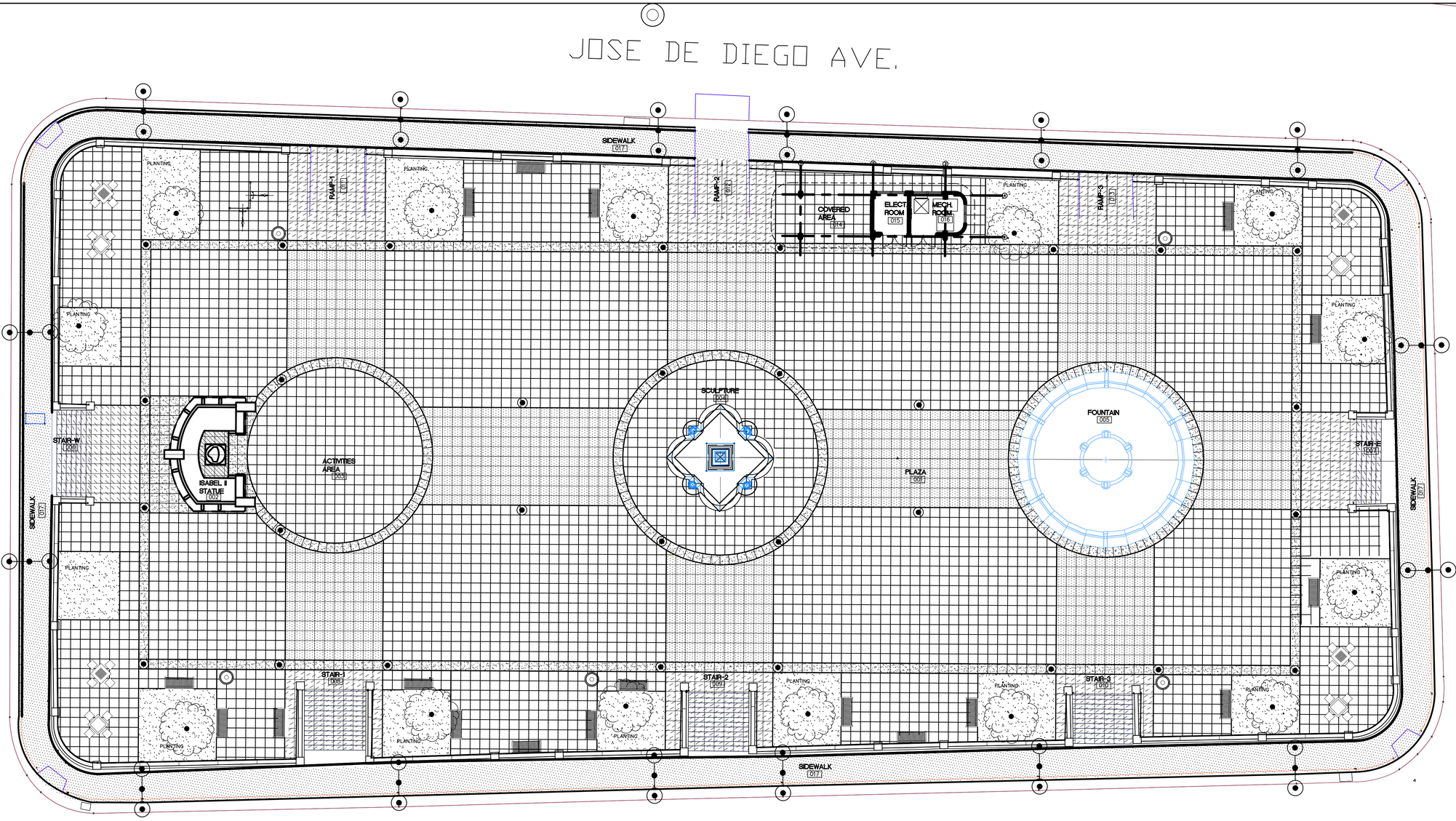

PROPOSED FLOOR TILES LAYOUT

SCALE: 3/32"=1'-0"

NORTH

PATTERN LEGEND

- 24" X 24" FLOOR TILES MO. _____ DIGNITARY (XTERIORS PAVER TEXTURED) BY DALTILE COLOR: TO BE SELECT BY ARCHITECT
- 24" X 24" FLOOR TILES MO. _____ DIGNITARY (XTERIORS PAVER TEXTURED) BY DALTILE COLOR: TO BE SELECT BY ARCHITECT
- 24" X 24" FLOOR TILES MO. _____ DIGNITARY (XTERIORS PAVER TEXTURED) BY DALTILE COLOR: TO BE SELECT BY ARCHITECT
- 24" X 24" FLOOR TILES AND STAIR FLOOR TILES MO. _____ DIGNITARY (XTERIORS PAVER TEXTURED) BY DALTILE COLOR: TO BE SELECT BY ARCHITECT
- MARBLE TILES COLOR: VARIES SEE SHEET A-6 FOR COLORS AND DETA
- EXPOSED CONCRETE AREAS
- PLANTING AREAS
- RESTORED EXISTING FLOOR SIDEWALK AROUND PLAZA

NOTE:

1. TILES JOINT AS MANUFACTURED TILE (MINIMUM SPACE) RECOMMENDED.
2. TILE JOINT COLOR TO BE SELECT BY ARCHITECT.

REVITALIZATION OF
LUIS MUÑOZ RIVERA PLAZA
IN THE URBAN CENTER
ARECIBO, PUERTO RICO

IGLESIAS•VAZQUEZ and ASSOCIATES
320 FORTALEZA STREET 2nd FLOOR SAN JUAN, PUERTO RICO 00902 TELS. 721-4545 721-4546
ENGINEERS • ARCHITECTS • PLANNERS

SHEET TITLE: PROPOSED FLOOR TILES LAYOUT
SCALE: AS SHOWN

CODE NO: 08-903-

DRAWING NO: A-19

DATE	REVISIONS

SHEET NO: 30 OF 00

N:\Proj\ARECIBO\903 PLAZA ARECIBO\DWG'S\030-903A-19.dwg

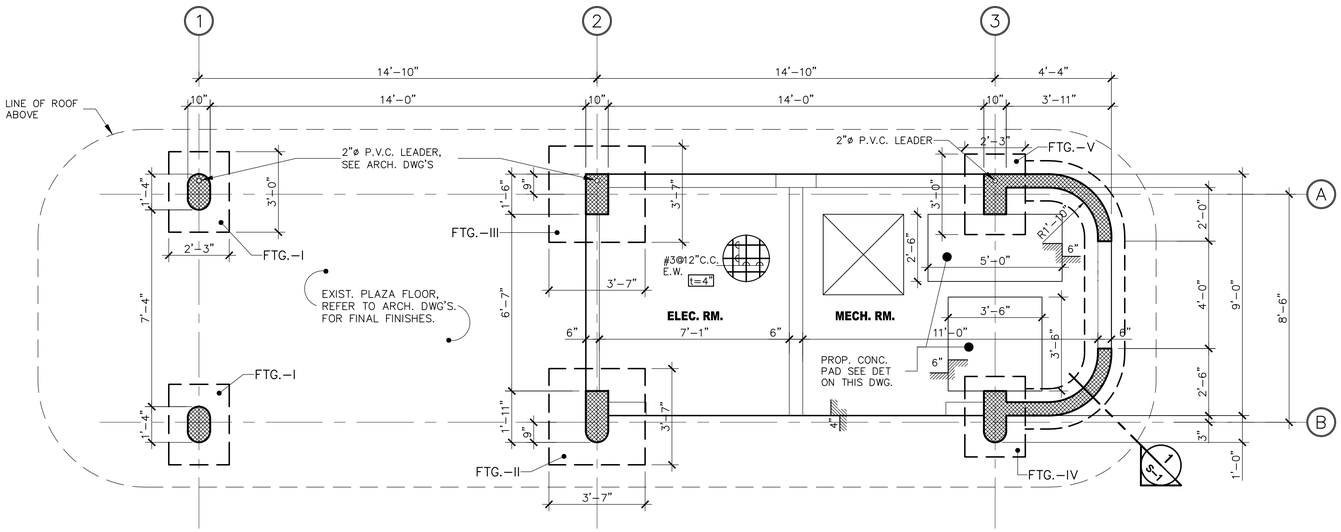

PROPOSED ELECTRICAL AND MECHANICAL BLDG. FOUNDATION PLAN

SCALE: 3/8"=1'-0"

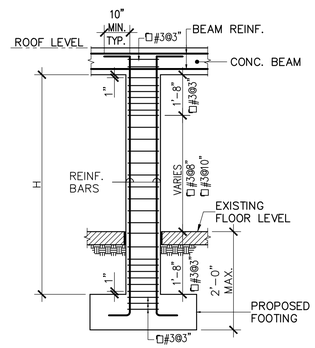

TYPICAL TRANSVERSE REINFORCEMENT LAYOUT IN COLUMNS

SCALE: 1/4"=1'-0"

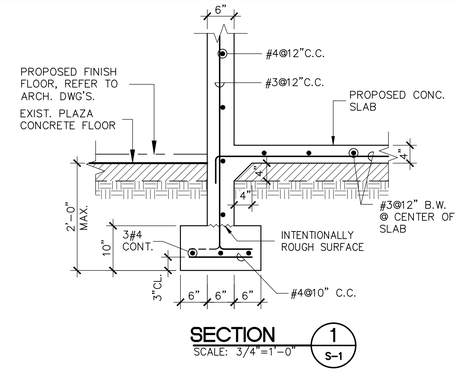

SECTION 1 / S-1

SCALE: 3/4"=1'-0"

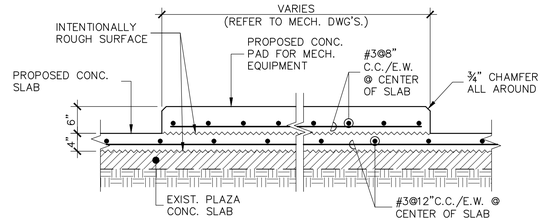

TYP. CONCRETE PAD DETAIL

SCALE: 3/4"=1'-0"

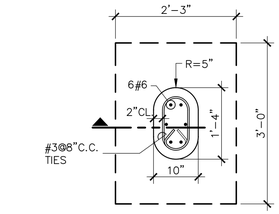

PLAN

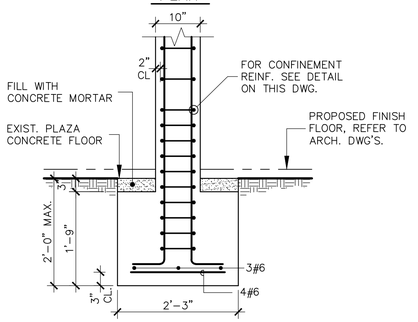

SECTION

FOOTING - I DETAIL

SCALE: 3/4"=1'-0"

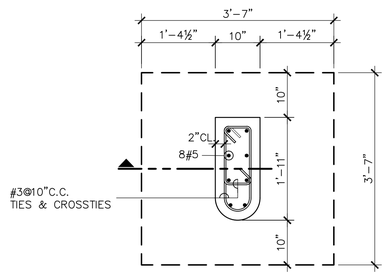

PLAN

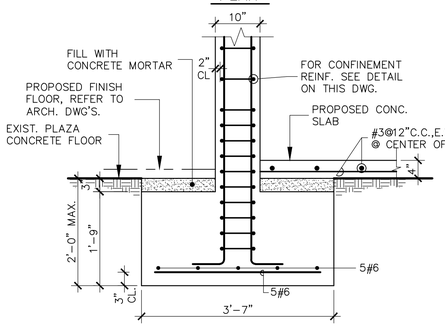

SECTION

FOOTING - II DETAIL

SCALE: 3/4"=1'-0"

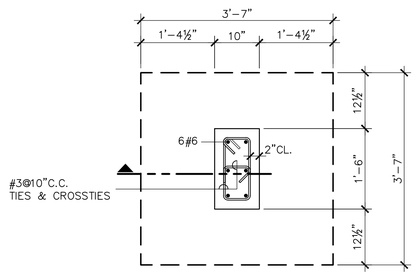

PLAN

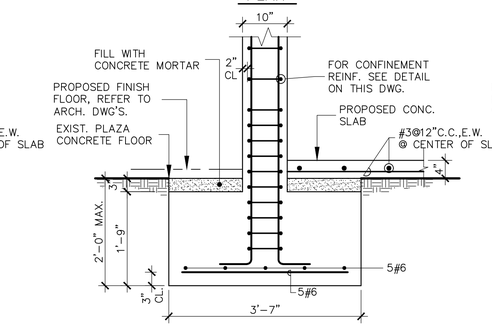

SECTION

FOOTING - III DETAIL

SCALE: 3/4"=1'-0"

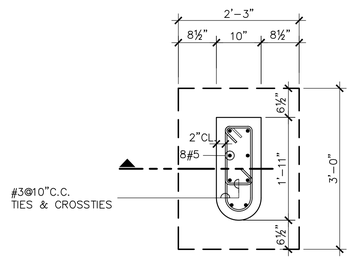

PLAN

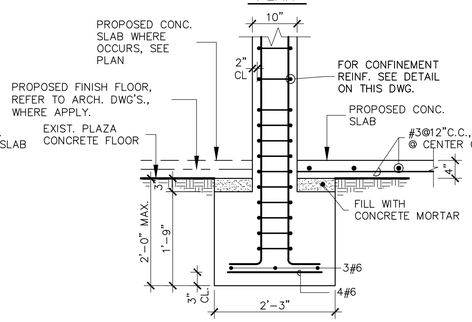

SECTION

FOOTING - IV DETAIL

SCALE: 3/4"=1'-0"

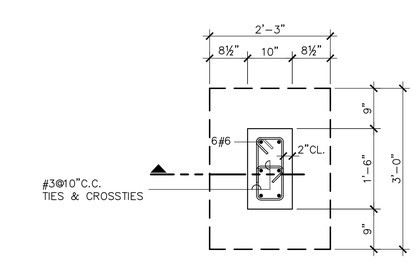

PLAN

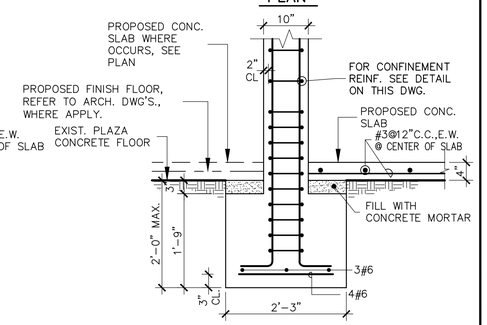

SECTION

FOOTING - V DETAIL

SCALE: 3/4"=1'-0"

IGLESIAS•VAZQUEZ and ASSOCIATES
320 FORTALEZA STREET 2nd FLOOR SAN JUAN, PUERTO RICO 00902 TELS. 721-4545 721-4546
ENGINEERS • ARCHITECTS • PLANNERS

REVITALIZATION OF
LUIS MUÑOZ RIVERA PLAZA
IN THE URBAN CENTER
ARECIBO, PUERTO RICO

SHEET TITLE:
PROPOSED ELECTRICAL AND MECHANICAL BLDG. FOUNDATION PLAN AND DETAILS
SCALE: AS SHOWN

CODE NO:
08-903-

DRAWING NO:
S-1

DATE	REVISIONS

SHEET NO:
OF
00

N:\Pro\ARECIBO\903 PLAZA ARECIBO\DWG'S\031-903S-1.dwg

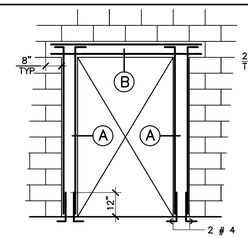

AT BLOCK WALL

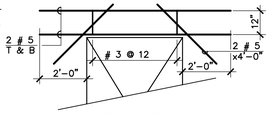

AT CONCRETE WALL

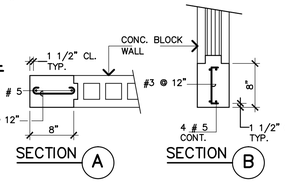

TYPICAL DOOR OPENING DETAIL
NOT TO SCALE

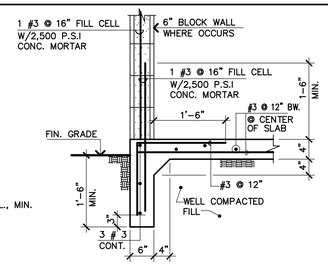

TYPICAL END CONDITION SECTION
N.T.S.

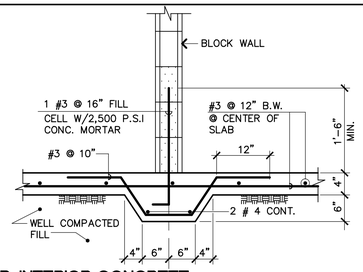

TYP. INTERIOR CONCRETE BLOCK WALL FOOTING SECTION
SCALE: 3/4"=1'-0"
NOTE:
LOCATE CENTROID OF REINFORCING AT MID OF SLAB DEPTH.

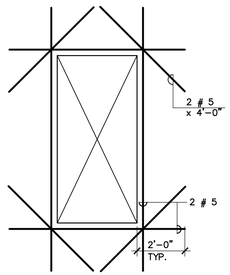

CONCRETE WALL TYP. OPENING DETAIL
SCALE: 3/8"=1'-0"

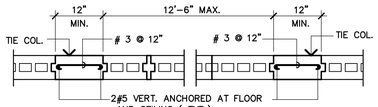

TYP. BLOCK WALL TIE COLUMN DETAIL
NOTE: FOR WALLS WITH HEIGHT OF MORE THAN 10 FEET, USE TIE BEAM EVERY 10 FEET

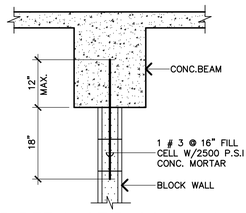

TYP. DETAIL OF BLOCK WALL ANCHORAGE TO BEAM
MINIMUM OF 8" IF 8". ARE NOT AVAILABLE
ANCHOR & INSERT HOOK WITH 180 HOOK

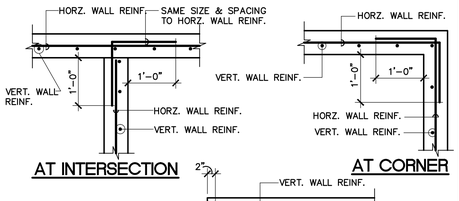

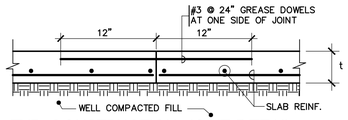

TYP. CONSTRUCTION JOINT DETAIL
N.T.S.

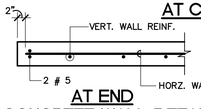

AT END

TYPICAL REINF. CONCRETE WALL DETAILS
N.T.S.

DESIGN DATA .....

1. LIVE LOADS:
   ROOF.....40 P.S.F.
   STAIRS AND PUBLIC CORRIDORS.....100 P.S.F.
   FLOOR .....100 P.S.F.
2. LATERAL LOADS
   WIND LOADS:
   A. BASIC WIND SPEED.....145 MPH
   B. IMPORTANCE FACTOR.....1.0
   C. EXPOSURE CLASSIFICATION.....D
   D. CATEGORY.....II
3. SEISMIC LOAD: ASCE 7–05
   A. OCCUPANCY CATEGORY.....III
   B. MAPPED S.R.A. = Sa.....98 g%
   C. MAPPED S.R.A. = S1.....39 g%
   D. SITE CLASSIFICATION.....D
   E. IMPORTANCE FACTOR.....1.00
4. STRESSES:
   SEE NOTES 1, 2 AND 3 OF GENERAL NOTES.
5. APPLICABLE CODES AND SPECIFICATIONS:
   A– 2018 PUERTO RICO BUILDING CODE
   B– AMERICAN CONCRETE INSTITUTE, ACI–318–19
   C– AMERICAN INSTITUTE OF STEEL CONSTRUCTION, A.I.S.C., 14TH. EDITION
   D– AMERICAN WELDING SOCIETY.
   E– ASCE 7–2005 CODE
   F– ALL OTHER CODES REFERRED BY THE ABOVE MENTIONED CODES.
   G– STEEL DECK SPECK. (ANSI RD–2010)

DOWELS & LAP SPLICES SCHEDULE FOR WALLS & COLUMNS (COMPRESSION FOR GRADE–60 BARS)

BAR SIZES	LENGTH OF DOWELS 22db (INCHES)	LENGTH OF SPLICE (INCHES)
# 3 (# 10) *	9	16
# 4 (# 13)	12	16
# 5 (# 16)	14	20
# 6 (# 19)	18	24
# 7 (# 22)	20	30
# 8 (# 25)	24	30
# 9 (# 29)	26	34
# 10 (# 32)	28	38
# 11 (# 36)	31	42

NOTE: EXCEPT OTHERWISE NOTED LENGTH SHOWN IS MEASURED FROM TOP OF FOOTING ELEVATION.
*(# 10) –– SOFT METRIC BAR SIZE DESIGNATION

GENERAL STRUCTURAL NOTES

1. ALL STRUCTURAL CONCRETE HAS BEEN DESIGNED BY THE ULTIMATE STRENGTH METHOD AND FOR THE FOLLOWING STRENGTH CAPACITIES AT 28 DAYS.
   FOOTINGS : 4,000 P.S.I.
   COLUMNS AND SHEAR WALLS : 4,000 P.S.I.
   BASEMENT WALLS : 4,000 P.S.I.
   BEAMS AND SLABS : 4,000 P.S.I.
   SLABS ON GRADE : 3,000 P.S.I.
   MAXIMUM WATER CEMENT RATIO = 0.40
   * THE CONTRACTOR SHALL BUY WITH EXCLUSIVITY CHARACTER PRODUCTS MANUFACTURED IN PUERTO RICO ACCORDING TO PREFERENCE LAWS # 42 AND # 109
2. ALL REINFORCING STEEL SHALL HAVE A MINIMUM YIELD POINT OF 60,000 P.S.I. AND SHALL CONFORM WITH ALL APPLICABLE A.S.T.M. AND A.C.I. SPECIFICATIONS.
3. ALL STRUCTURAL STEEL SHALL CONFORM WITH ALL APPLICABLE A.S.T.M. AND A.I.S.C. SPECIFICATIONS AND SHALL HAVE A MINIMUM YIELD POINT OF 36,000 P.S.I., EXCEPT WHERE OTHERWISE SHOWN OR NOTED ELSEWHERE.
4. ALL WELDING SHALL BE MADE IN STRICT ACCORDANCE WITH THE SPECIFICATIONS OF THE AMERICAN WELDING SOCIETY AND ALL APPLICABLE A.C.I. SPECIFICATIONS.
5. LAP SPLICES SHALL CONFORM TO ACI–318–19 SPECIFICATIONS, AND UNLESS OTHER – WISE DRAWN OR NOTED ELSEWHERE THE MINIMUM SPLICE SHALL NOT BE LESS OF 38 BAR DIAMETER.
6. DOWELS SHALL BE EQUAL IN SIZE AND NUMBER TO VERTICAL REINFORCEMENT WITH A MINIMUM EMBEDMENT OF 24 BAR DIAMETERS INTO FOOTING AND PROJECTING 38 BAR DIAMETERS ABOVE IT UNLESS OTHERWISE SHOWN OR NOTED ELSEWHERE.
7. TEMPERATURE REINFORCEMENT SHALL BE PROVIDED IN ALL ONE WAY SLABS PERPENDICULAR TO THE MAIN REINFORCEMENT ACCORDING TO THE FOLLOWING TABLE:

SLAB THICKNESS	REINFORCEMENT
3"	#3 SPACED 12" C/C
4"	#3 SPACED 12" C/C
5"	#3 SPACED 12" C/C
6"	#3 SPACED 10" C/C
7"	#3 SPACED 9" C/C
8"	#3 SPACED 8" C/C
9"	#4 SPACED 12" C/C
10"	#4 SPACED 11" C/C

   AN ALTERNATE USING WELDED WIRE FABRIC PROVIDING THE SAME STEEL AREA CAN BE USED.
8. UNLESS OTHERWISE SHOWN OR NOTED ELSEWHERE, CONCRETE WALLS SHALL BE REINFORCED AS FOLLOWS:

THICKNESS	VERTICAL REINF.	HORIZONTAL REINF.
4"	#3 SPACED 12" C/C	#3 SPACED 12" C/C
6"	#3 SPACED 12" C/C	#4 SPACED 12" C/C
8"	#3 SPACED 9" C/C	#4 SPACED 10" C/C

9. CONCRETE PROTECTION FOR REINFORCING BARS SHALL BE AS FOLLOWS UNLESS OTHER– WISE SHOWN OR NOTED.
   FOOTINGS BOTTOM ..... 3"
   FOOTINGS TOP & SIDES ..... 2½"
   WALLS, SLABS AND JOINTS (NOT EXPOSED TO WEATHER) ..... 1"
   (EXPOSED TO WEATHER) ..... 1½"
   COLUMNS AND BEAMS ..... 2"
   BASEMENT WALLS.....2"
10. ALL SLABS AND BEAMS SHALL HAVE NO HORIZONTAL JOINT. ANY STOP IN CONCRETE WORK MUST BE MADE AT CENTER OF SPAN WITH VERTICAL BULKHEADS.
11. FOR CONCRETE FORM WORK, SURFACE FINISHING, BEVELED CORNERS AND DRIPS, SEE ARCHITECTURAL PLANS.
12. NOTE AND DETAILS ON DRAWINGS SHALL TAKE PRECEDENCE OVER GENERAL NOTES AND TYPICAL DETAILS.
13. CONTRACTOR SHALL VERIFY ALL DIMENSIONS AND EXISTING FIELD CONDITIONS PRIOR TO STARTING CONSTRUCTION. IF ANY DISCREPANCY ARISES IN THE STRUCTURAL PLANS OR BETWEEN STRUCTURAL AND ARCHITECTURAL PLANS, THE STRUCTURAL ENGINEER SHALL BE NOTIFIED IMMEDIATELY.
14. CONTRACTOR SHALL PROVIDE, SET AND VERIFY DIMENSIONS AND LOCATION OF ALL ANCHORS, INSERTS, BOLTS, SLEEVES, CONDUITS, ETC., SHOWN OR NOTED IN ARCHITECTURAL AND/OR MECHANICAL AND PLUMBING PLANS. ANY DETRIMENTAL INTERFERENCE BETWEEN ANY OF THESE ITEMS AND THE STRUCTURAL ELEMENTS SHALL BE BROUGHT TO THE ATTENTION OF THE STRUCTURAL ENGINEER.
15. PROVISIONS FOR DETAILS NOT SPECIFICALLY DRAWN SHALL BE MADE BY THE CONTRACTOR IN ACCORDANCE WITH THE ACI–318–19 AND/OR CLARIFIED WITH THE DESIGNER.
16. HORIZONTAL MOVEMENT OF ANY HEAVY EQUIPMENT OVER STRUCTURAL FLOORS OR ROOF AND ITS TEMPORARY AND/OR DEFINITE LOCATIONS MUST BE PREVIOUSLY APPROVED BY THE DESIGNER SO AS NOT TO OVERLOAD THE STRUCTURE OR IN ANY OTHER WAY IMPAIR THE STRUCTURE. SAME PRECAUTIONS SHALL BE TAKEN FOR THE PILING OF CONSTRUCTION MATERIALS.
17. THE CONTRACTOR SHALL TAKE PRECAUTIONS TO PRODUCE CORRECTLY ALIGNED CONCRETE, CONSIDERING AMONG OTHER THINGS THE ELASTIC DEFORMATION OF THE STRUCTURE MEMBERS.
18. ALL TESTS FOR PROPERTIES OF CONCRETE AGGREGATES, CEMENT, CONCRETE STRENGTH BY CYLINDERS, SLUMP TESTS AND VIBRATION OF CONCRETE AND OTHER TESTS REQUIRED FOR CONCRETE IN THE SPECIFICATIONS SHALL BE PERFORMED UNDER THE SUPERVISION OF A CERTIFIED TESTING LABORATORY TO BE APPROVED BY THE ENGINEERS.
19. POURING OF CONCRETE SHALL NOT BE STARTED UNTIL STEEL HAS BEEN PLACED AND APPROVED BY THE ENGINEER OR HIS AUTHORIZED REPRESENTATIVE.
20. PROVIDE CAMBER ON SLABS AND BEAMS AS PER ENGINEER'S INSTRUCTIONS.
21. STRUCTURAL DRAWINGS ARE INTENDED TO BE USED WITH ARCHITECTURAL, ELECTRICAL AND MECHANICAL DRAWINGS. CONTRACTOR IS RESPONSIBLE FOR COORDINATING SUCH REQUIREMENTS INTO THEIR SHOP DRAWINGS AND WORK.
22. NO OPENINGS, OTHER THAN THOSE SHOWN ON THE STRUCTURAL DRAWINGS, SHALL BE MADE IN ANY STRUCTURAL MEMBER WITHOUT THE WRITTEN APPROVAL OF THE STRUCTURAL ENGINEER.
23. IN CASE OF DOUBT IN THE INTERPRETATION OF ANY ASPECT OF THESE STRUCTURAL DRAWINGS AND/OR SPECIFICATIONS, THE DESIGNER SHALL BE CONSULTED.
24. ALL INTERIOR AND EXTERIOR BLOCK WALLS SHALL BE REINFORCED WITH DUR–O–WALL TRUSS OR APPROVED MATERIAL HAVING EQUAL EFFECTIVE AREA OF STEEL, MORTAR BOND, AND APPLICABLE BUILDING CODE APPROVAL. MATERIAL SHALL BE MANUFACTURED FROM UNCOATED NO. 9 GAGE WIRE CONFORMING TO THE REQUIREMENTS OF ASTM A82 OR SIMILAR.
25. FOR TWO WAY SLAB #6 AT 9" SPECIAL REINFORCEMENT SHALL BE PROVIDED AT EXTERIOR CORNERS IN BOTH BOTTOM AND TOP OF THE SLAB, FOR A DISTANCE IN EACH DIRECTION FROM THE CORNER EQUAL TO 5 FT. THE REINFORCEMENT IN THE TOP OF THE SLAB SHALL BE PARALLEL TO THE DIAGONAL FROM THE CORNER OF THE REINFORCEMENT IN THE BOTTOM OF THE SLAB SHALL BE AT RIGHT ANGLES TO THE DIAGONAL.
26. IN THE CASE OF 6" AND 8" WALLS SUPPORTING BEAMS OR CONCENTRATED LOADS, THE EFFECTIVE LENGTH OF THE WALLS SHALL BE REINFORCED WITH #5 AT 9" BOTH FACES (VERTICAL REINFORCEMENT). THE LENGTH OF THE WALL TO BE CONSIDERED AS EFFECTIVE SHALL BE THE WIDTH OF THE BEARING PLUS 4 TIMES THE WALL THICKNESS.
27. ONE QUARTER OF THE LARGE AMOUNT OF THE TOP TENSION REINFORCEMENT REQUIRED AT EITHER END OF THE BEAM SHALL BE CONTINUOUS THROUGHOUT THE TOP OF THE BEAM OR GIRDER.
28. SHOP DRAWINGS SHALL BE SUBMITTED BY THE CONTRACTOR TO THE STRUCTURAL DESIGNER FOR FINAL APPROVAL.

MASONRY.....

1. MINIMUM COMPRESSIVE STRENGTH OF MASONRY (F'M) ESTABLISHED IN ACCORDANCE WITH THE UNIT STRENGTH METHOD SHALL BE 1,500 PSI.
2. MASONRY UNITS SHALL HAVE A NET AREA COMPRESSIVE STRENGTH OF 1,900 PSI.
3. MORTAR SHALL BE TYPE "S" MORTAR. MASONRY CEMENT SHALL NOT BE USED FOR MORTAR.
4. GROUT SHALL HAVE A MINIMUM COMPRESSIVE STRENGTH OF 2,500 PSI AT 28 DAYS.
5. SOLID GROUT ALL CELLS THAT CONTAIN VERTICAL REINFORCING, TYP.

FOUNDATION.....

1. FOUNDATION HAS BEEN DESIGNED FOLLOWING THE RECOMMENDATIONS OF GEO CIM, INC., SOIL CONSULTING ENGINEERS. SAID RECOMMENDATIONS AND SOIL REPORT MADE BY THE ABOVE MENTIONED ENGINEER, ARE MADE PART OF THIS PART PLAN AND SPECIFICATIONS.
2. FOOTING DESIGN ARE BASED ON A NET ALLOWABLE SOIL BEARING PLESURE OF 2,500 P.S.I., REFER TO SOIL REPORT.
3. ALL FILL SHALL BE COMPACTED TO 90% OF MODIFIED PROCTOR TEST (MPT) (ASTM D–1557)
4. WHEN POURING CONCRETE FOR FOUNDATIONS, THERE SHOULD BE NO WATER IN THE EXCAVATION TRENCH.

MATERIALS.....

1. THE FOLLOWING SPECIFICATIONS APPLY TO THE STRUCTURAL STEEL WORK:
   A) ROLLED SHAPES, PLATES AND BARS.....ASTM A–36
   B) STEEL PIPES, GRADE B .....ASTM A–53
   C) HIGH STRENGTH BOLTS .....ASTM A–325
   D) HOLLOW STRUTURAL SECTIONS, GRADE B.....ASTM A–500
   E) WELD FILLER MATERIAL, E70XX ELECTRODES.....ASTM A–223
   F) ANCHOR BOLTS.....ASTM A–325
2. THE FOLLOWING SPECIFICATIONS APPLY TO THE STRUCTURAL CONCRETE WORK:
   A) READY– MIXED CONCRETE.....ASTM C–94
   B) REINFORCE STEEL, GRADE 60.....ASTM A–615
3. THE FOLLOWING SPECIFICATIONS APPLY TO THE MASONRY WORK:
   A) HOLLOW CONCRETE MASONRY UNITS.....ASTM C–90
   B) MORTAR (TYPE M).....ASTM C–270
   C) MOSONRY GROUT.....ASTM C–476
   D) COLD DRAWN WIRE.....ASTM A–82
   G) STEEL DECK.....AST A–792

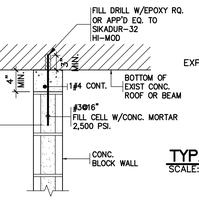

ORNAMENTAL CONC. BLOCKS TYP. ANCHORAGE DETAIL
N.T.S.

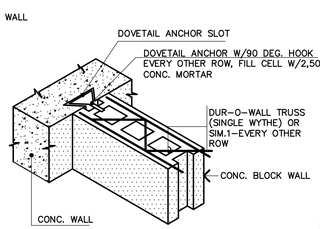

TYP. BLOCK WALL TO CONCRETE WALL ANCHORAGE DETAIL
N.T.S.

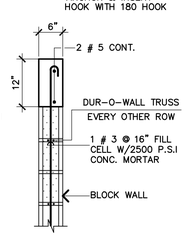

TYPICAL BLOCK WALL END CONDITION TIE BEAM DETAIL
N.T.S.

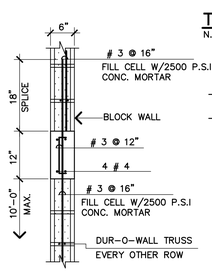

TYPICAL BLOCK WALL CONTINUOUS CONDITION TIE BEAM DETAIL
N.T.S.

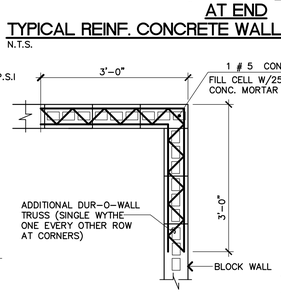

ADD. REINF FOR BLOCK WALL CORNER DETAIL
N.T.S.

TYP. DRILL FOR ANCHOR BOLTS
SCALE: NOT TO SCALE

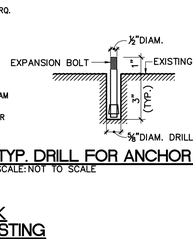

TYPICAL DETAIL OF BLOCK WALL ANCHORAGE TO EXISTING CONCRETE ROOF OR BEAM
N.T.S.

TYPICAL ANCHOR BAR FOR NEW TO EXISTING CONSTRUCTION

ADD. REINF. FOR BLOCK WALL INTERSECTION DETAIL
N.T.S.

TYPICAL 90° HOOK MINIMUM EMBEDMENT LENGTH FOR GRADE 60 REINFORCING BARS

BARS	f'c=3,000 A (in.)	f'c=3,000 B (in.)	f'c=4,000 A (in.)	f'c=4,000 B (in.)	f'c=5,000 A (in.)	f'c=5,000 B (in.)
# 3	10	6	9	6	8	6
# 4	13	8	11	8	10	8
# 5	16	10	14	10	13	10
# 6	20	12	17	12	15	12
# 7	23	14	20	14	18	14
# 8	26	16	23	16	20	16
# 9	30"	19	26	19	23	19
# 10	33	22	29	22	26	22
# 11	37	24	32	24	29	24

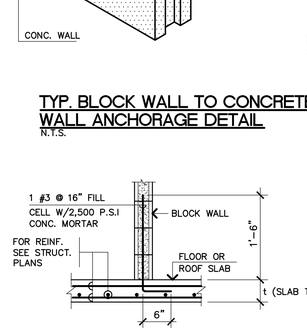

CONTROL JOINT DETAIL
MAKE SAW CUTS FOR CONTROL JOINT WITHIN 4 TO 12 HOURS AFTER THE CONCRETE HARDENS

CONSTRUCTION JOINT DET.
N.T.S.

BLOCK WALL TO STRUCTURAL SLAB ANCHOR DETAIL
SCALE: 3/4"=1'–0"

DEVELOPMENT AND SPLICES LENGTH NOTES:

1. TABULATED VALUES ARE BASED ON GRADE 60 REINFORCING BARS AND NORMAL CONCRETE. LENGTHS ARE IN INCHES.
2. TENSION DEVELOPMENT LENGTHS AND TENSION LAP SPLICE LENGTHS ARE CALCULATED PER ACI–318–19, SECTION 25.4 AND 25.5 RESPECTIVELY.
3. LAP SPLICE LENGTHS ARE MULTIPLES OF TENSION DEVELOPMENT LENGTHS; CLASS A= 1.0 Ld AND CLASS B=1.3 Ld (ACI 318–19, SECTION 25.5)
4. BAR C.–C. SPACING WAS ASSUMED TO BE GREATER THAN TWICE THE CONCRETE COVER PLUS ONE BAR DIAMETER, SO THAT C WAS GOVERNED BY BY CONCRETE COVER RATHER THAN BY BAR SPACING.
5. BAR SIZES #14 AND #18 WERE INTENTIONALLY OMITTED FROM THIS TABLE.
6. TOP BARS ARE HORIZONTAL BARS WITH MORE THAN 12 IN. OF CONCRETE CAST BELOW THE BARS.
7. FOR LIGHTWEIGHT AGGREGATE CONCRETE, MULTIPLY THE TABULATED VALUES BY 1.3.
8. USE CLASS–A FOR TENSION DEVELOPMENT LENGTH & CLASS–B FOR LAP SPLICE.

TENSION DEVELOPMENT AND LAP SPLICE LENGTHS FOR BARS IN WALLS AND SLABS FOR GRADE 60 BARS (fy=60,000psi., f'c=3,000 p.s.i.)

BAR SIZE	LAP CLASS	CONCRETE COVER=1.00 in. TOP	CONCRETE COVER=1.00 in. OTHER	CONCRETE COVER=1.50 in. TOP	CONCRETE COVER=1.50 in. OTHER	CONCRETE COVER=2.00 in. TOP	CONCRETE COVER=2.00 in. OTHER
#3	A	13	12	13	12	13	12
	B	17	16	17	16	17	16
#4	A	17	13	17	13	17	13
	B	23	17	23	17	23	17
#5	A	26	20	22	17	22	17
	B	33	26	28	22	28	22
#6	A	35	27	26	20	26	20
	B	46	35	34	26	34	26
#7	A	57	44	43	33	38	29
	B	74	57	55	43	49	38
#8	A	72	55	54	41	43	33
	B	93	72	70	54	56	43
#9	A	87	67	66	51	53	41
	B	113	87	86	66	69	53
#10	A	106	81	81	62	66	51
	B	137	106	105	81	85	66
#11	A	125	96	97	74	79	61
	B	162	125	125	97	102	79

ALL MEASUREMENTS IN INCHES

TENSION DEVELOPMENT AND LAP SPLICE LENGTHS FOR BARS IN WALLS AND SLABS FOR GRADE 60 BARS (fy=60,000psi., f'c=4,000 p.s.i.)

BAR SIZE	LAP CLASS	CONCRETE COVER=1.00 in. TOP	CONCRETE COVER=1.00 in. OTHER	CONCRETE COVER=1.50 in. TOP	CONCRETE COVER=1.50 in. OTHER	CONCRETE COVER=2.00 in. TOP	CONCRETE COVER=2.00 in. OTHER
#3	A	12	12	12	12	12	12
	B	16	16	16	16	16	16
#4	A	15	12	15	12	15	12
	B	20	16	20	16	20	16
#5	A	22	17	19	15	19	15
	B	29	22	24	19	24	19
#6	A	31	24	22	17	22	17
	B	40	31	29	22	29	22
#7	A	50	38	37	28	33	25
	B	64	50	48	37	42	33
#8	A	62	48	47	36	37	29
	B	80	62	60	47	48	37
#9	A	76	58	57	44	46	36
	B	98	76	74	57	60	46
#10	A	92	70	70	54	57	44
	B	119	92	91	70	74	57
#11	A	108	83	84	64	68	53
	B	141	108	109	84	89	68

ALL MEASUREMENTS IN INCHES

TENSION DEVELOPMENT AND LAP SPLICE LENGTHS FOR BARS IN WALLS AND SLABS FOR GRADE 60 BARS (fy=60,000psi., f'c=5,000 p.s.i.)

BAR SIZE	LAP CLASS	CONCRETE COVER=1.00 in. TOP	CONCRETE COVER=1.00 in. OTHER	CONCRETE COVER=1.50 in. TOP	CONCRETE COVER=1.50 in. OTHER	CONCRETE COVER=2.00 in. TOP	CONCRETE COVER=2.00 in. OTHER
#3	A	12	14	12	12	12	12
	B	16	19	16	16	16	16
#4	A	16	19	12	14	12	12
	B	21	25	16	18	16	16
#5	A	20	24	14	16	12	14
	B	26	32	18	21	16	18
#6	A	24	28	16	19	12	15
	B	32	37	21	25	16	20
#7	A	40	59	27	39	21	30
	B	52	77	35	51	27	39
#8	A	45	67	30	45	24	34
	B	59	87	39	59	31	44
#9	A	51	76	34	51	26	38
	B	66	99	44	66	34	49
#10	A	57	85	38	57	30	43
	B	74	111	50	74	39	56
#11	A	64	95	42	63	32	48
	B	83	124	55	82	42	62

ALL MEASUREMENTS IN INCHES

IGLESIAS•VAZQUEZ and ASSOCIATES
320 FORTALEZA STREET 2nd FLOOR SAN JUAN, PUERTO RICO 00902 TELS. 721–4545 721–4546
ENGINEERS • ARCHITECTS • PLANNERS

REVITALIZATION OF LUIS MUÑOZ RIVERA PLAZA IN THE URBAN CENTER ARECIBO, PUERTO RICO

SHEET TITLE: TYPICAL STRUCTURAL SECTIONS AND NOTES
SCALE: AS SHOWN

CODE NO: 08–903–

DRAWING NO: S–2

SHEET NO: OF 00

DATE	REVISIONS

N:\Proj\ARECIBO\903 PLAZA ARECIBO\DWG'S\33–90352.dwg

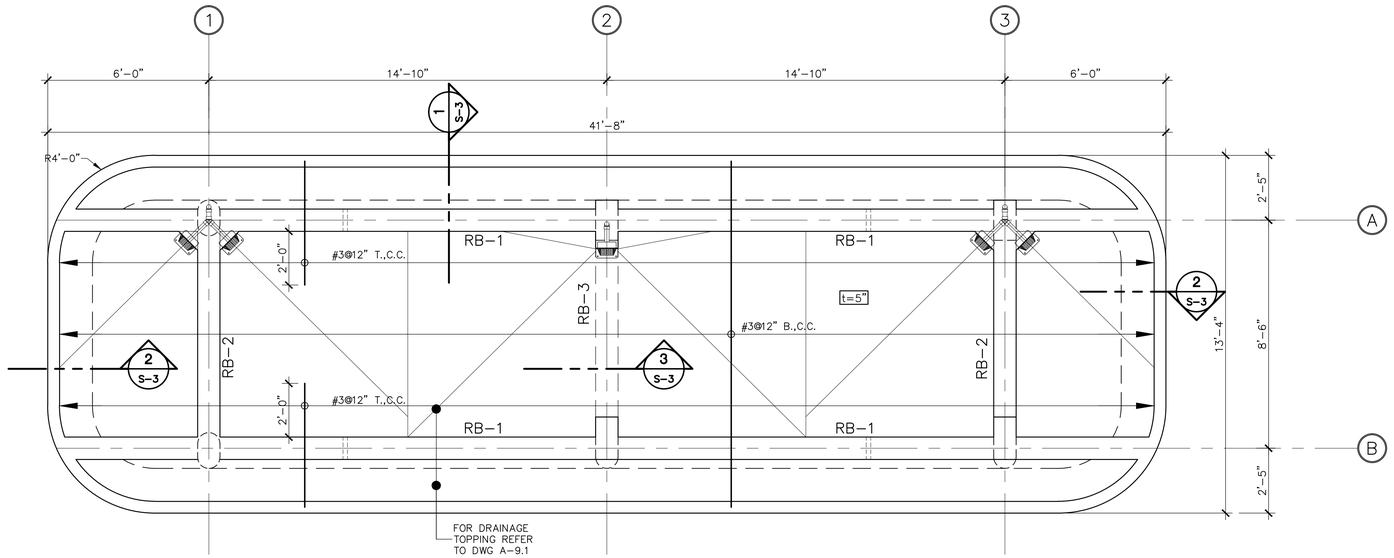

PROPOSED STRUCTURAL ROOF PLAN

SCALE: 3/8"=1'–0"

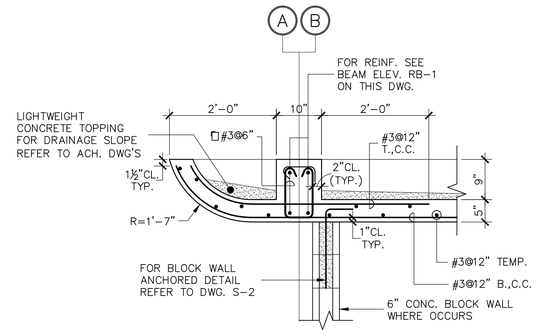

SECTION 1 / S-3

SCALE: 3/4"=1'–0"

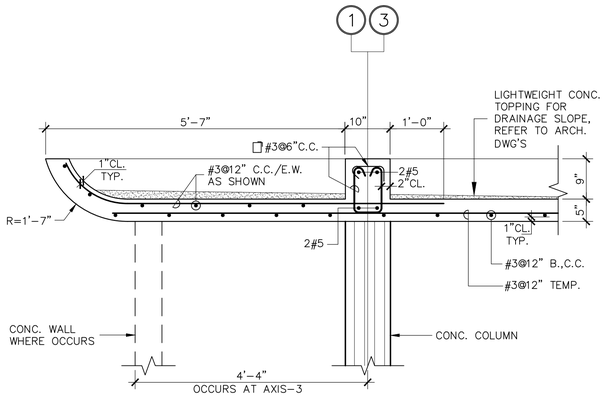

SECTION 2 / S-3

SCALE: 3/4"=1'–0"

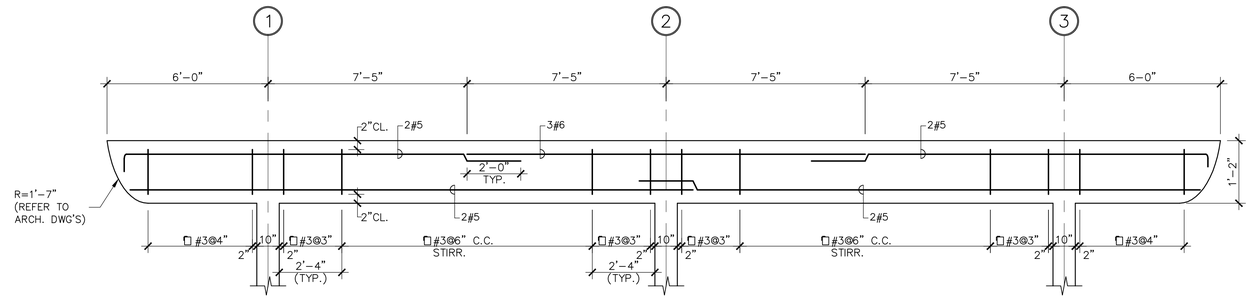

LONGITUDINAL REINF. BEAM ELEVATION FOR RB-1

SCALE: HORZ.=3/8"=1'–0"
VERT.=3/4"=1'–0"

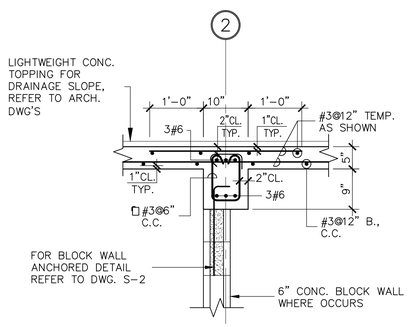

SECTION 3 / S-3

SCALE: 3/4"=1'–0"

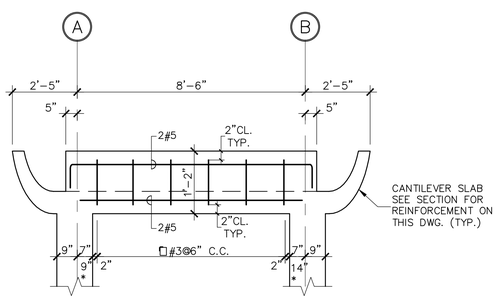

TRANSVERSAL REINF. BEAM ELEVATION FOR RB-2

SCALE: HORZ.=3/8"=1'–0"
VERT.=3/4"=1'–0"
* APPLY ONLY ON AXIS–3

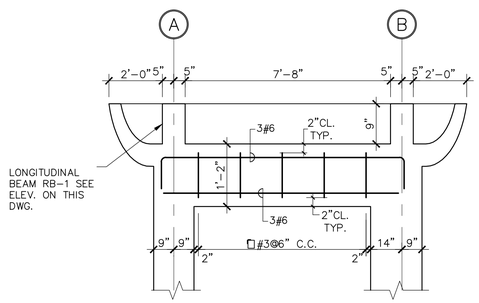

TRANSVERSAL REINF. BEAM ELEVATION FOR RB-3

SCALE: HORZ.=3/8"=1'–0"
VERT.=3/4"=1'–0"

REVITALIZATION OF
LUIS MUÑOZ RIVERA PLAZA
IN THE URBAN CENTER
ARECIBO, PUERTO RICO

IGLESIAS•VAZQUEZ and ASSOCIATES
320 FORTALEZA STREET 2nd FLOOR SAN JUAN, PUERTO RICO 00902 TELS. 721–4545 721–4546
ENGINEERS • ARCHITECTS • PLANNERS

SHEET TITLE:
PROPOSED ELETRICAL AND MECHANICAL BLDG. STRUCTURAL ROOF PLAN AND DETAILS
SCALE: AS SHOWN

CODE NO: 08-903-

DRAWING NO: S–3

DATE	REVISIONS

SHEET NO: OF 00

N:\Pro\ARECIBO\903 PLAZA ARECIBO\DWG'S\033-903S-3.dwg

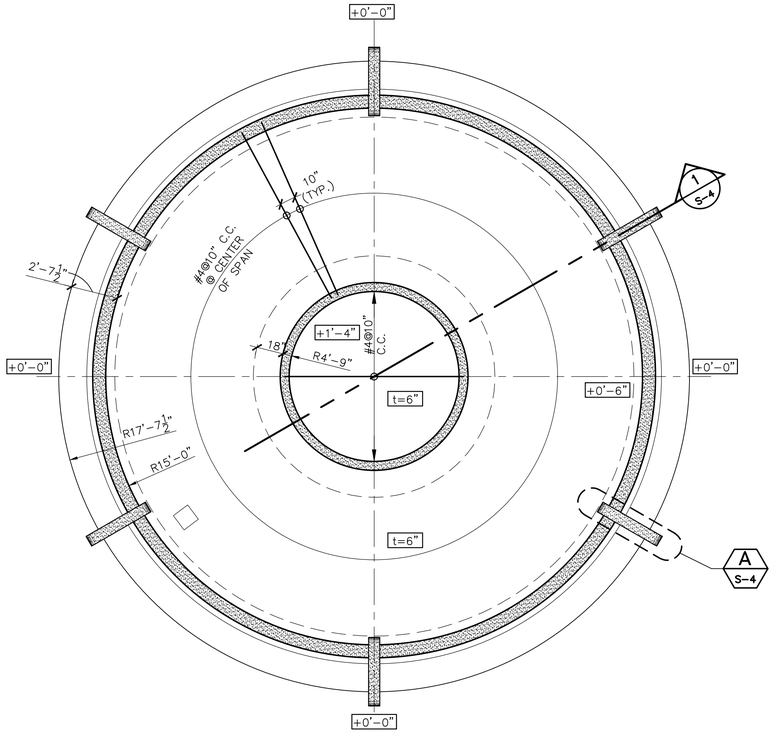

PROPOSED FOUNTAIN FOUNDATION PLAN

SCALE: 1/4"=1'-0"

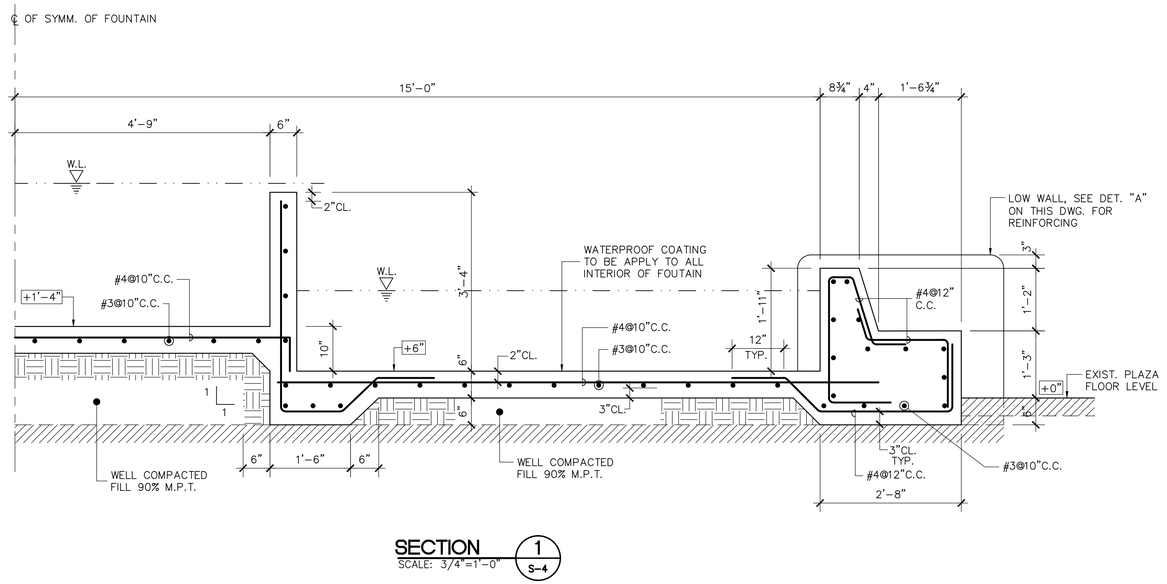

SECTION

SCALE: 3/4"=1'-0" (1 / S-4)

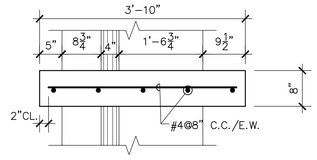

PLAN

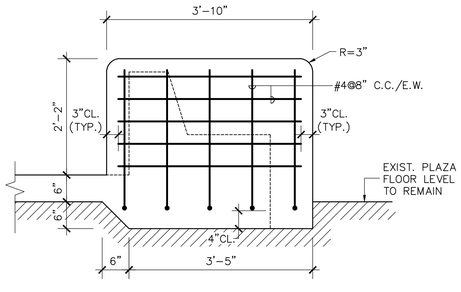

SECTION

DETAIL

SCALE: 1 1/2"=1'-0" (A / S-4)

N:\Proj\ARECIBO\903 PLAZA ARECIBO\DWG'S\034-903S-4.dwg

REVITALIZATION OF
LUIS MUÑOZ RIVERA PLAZA
IN THE URBAN CENTER
ARECIBO, PUERTO RICO

IGLESIAS • VAZQUEZ and ASSOCIATES
ENGINEERS • ARCHITECTS • PLANNERS
320 FORTALEZA STREET 2nd FLOOR SAN JUAN, PUERTO RICO 00902 TELS. 721-4545 721-4546

SHEET TITLE: PROPOSED FOUNTAIN FOUNDATION PLAN

SCALE: AS SHOWN

CODE NO: 08-903-

DRAWING NO: S-4

SHEET NO: OF 00

DATE	REVISIONS

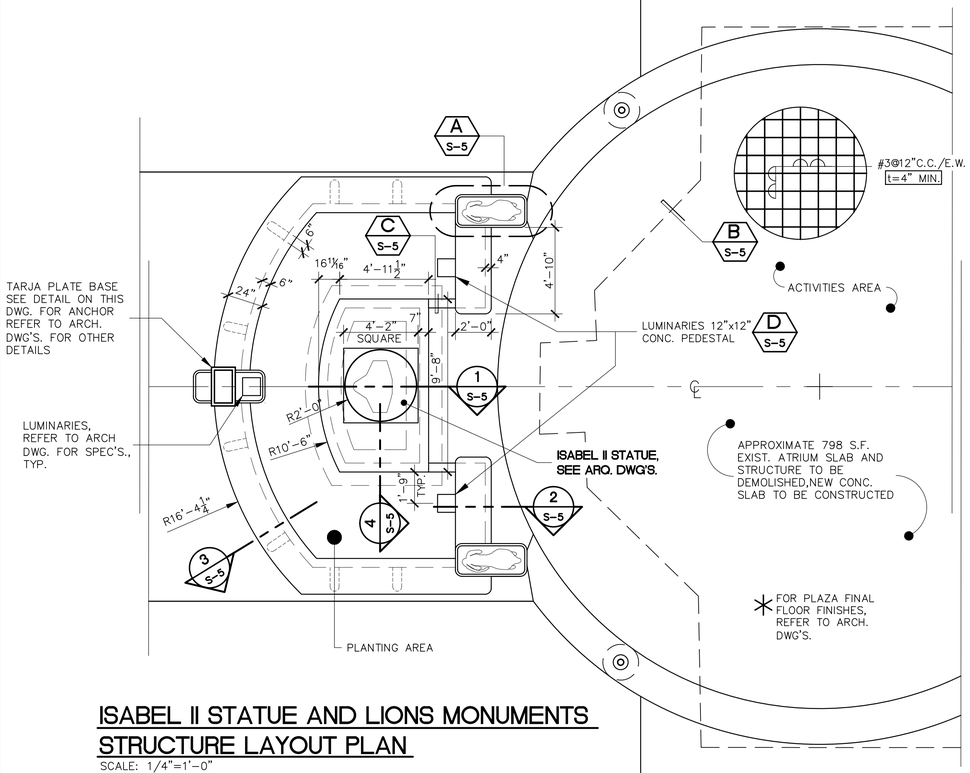

ISABEL II STATUE AND LIONS MONUMENTS STRUCTURE LAYOUT PLAN

SCALE: 1/4"=1'-0"

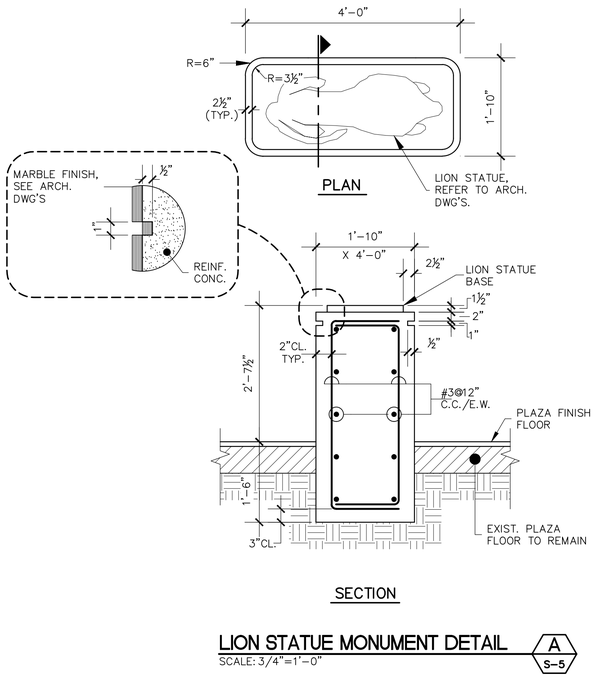

LION STATUE MONUMENT DETAIL (A S-5)

SCALE: 3/4"=1'-0"

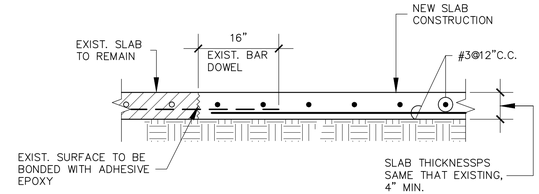

CONSTRUCTION JIONT FOR NEW EXISTNG SLAB (B S-5)

SCALE: 3/4"=1'-0"

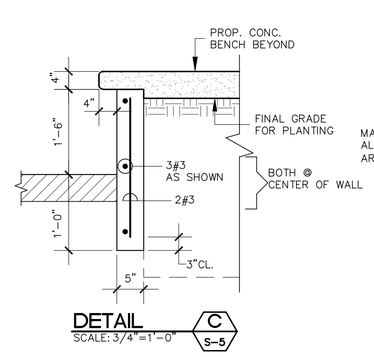

DETAIL (C S-5)

SCALE: 3/4"=1'-0"

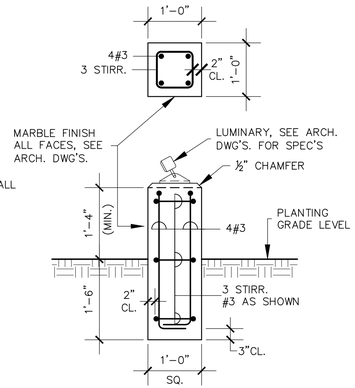

LUMINARIES CONC. BASE DETAIL (D S-5)

SCALE: 3/4"=1'-0"

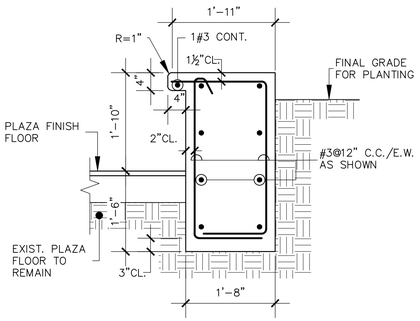

SECTION (2 S-5)

SCALE: 3/4"=1'-0"

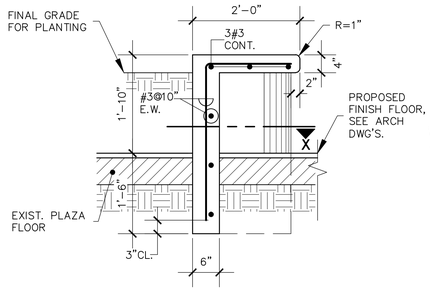

SECTION (3 S-5)

SCALE: 3/4"=1'-0"

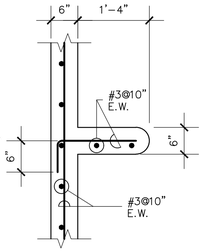

SECTION–X

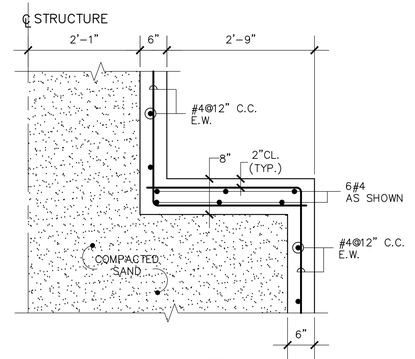

SECTION (4 S-5)

SCALE: 3/4"=1'-0"

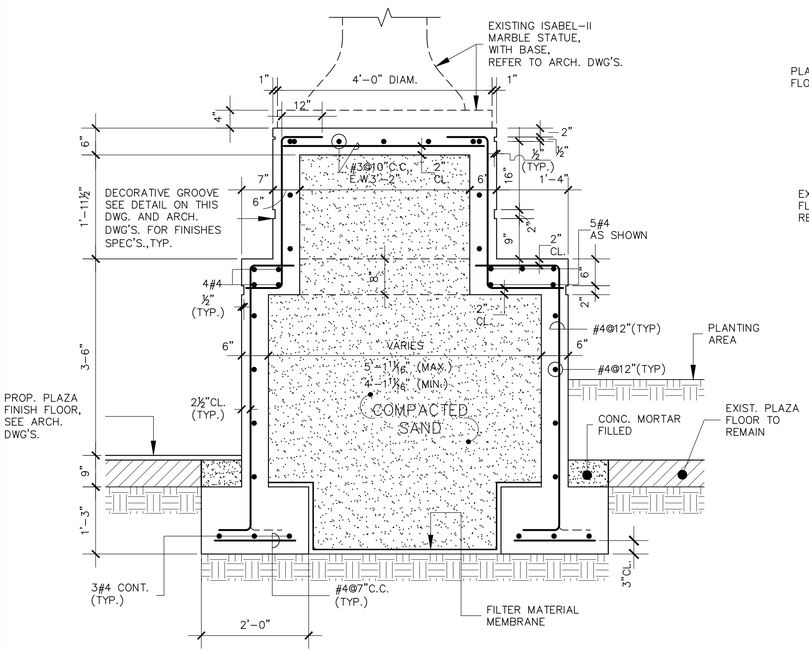

SECTION (1 S-5)

SCALE: 3/4"=1'-0"

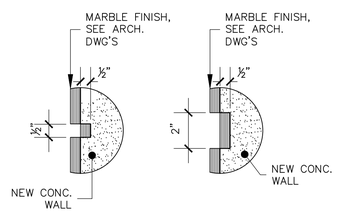

TYP DECORATIVE GROOVE FOR ISABEL-II STATUE STRUTURE

SCALE: 3/4"=1'-0"

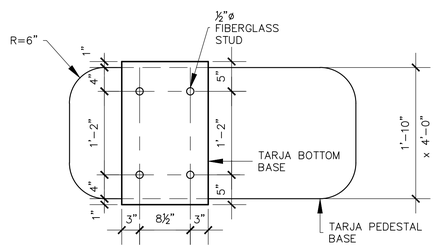

TARJA ANCHOR DETAIL

SCALE: 1"=1'-0"

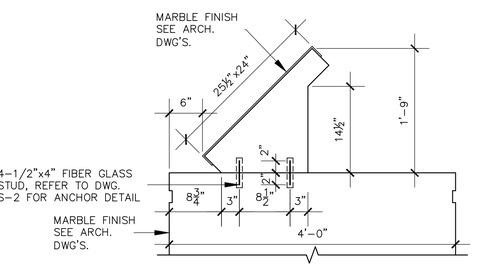

REVITALIZATION OF
LUIS MUÑOZ RIVERA PLAZA
IN THE URBAN CENTER
ARECIBO, PUERTO RICO

IGLESIAS•VAZQUEZ and ASSOCIATES
320 FORTALEZA STREET 2nd FLOOR SAN JUAN, PUERTO RICO 00902 TELS. 721-4545 721-4546
ENGINEERS • ARCHITECTS • PLANNERS

SHEET TITLE:
ISABEL II STATUE & LIONS MONUMENTS STRUCTURE LAYOUT, PLAN, SECTIONS AND DETAILS
SCALE: AS SHOWN

CODE NO: 08-903-

DRAWING NO: S-5

DATE	REVISIONS

SHEET NO: OF 00

N:\Pro\ARECIBO\903 PLAZA ARECIBO\DWG'S\035-903S-5.dwg

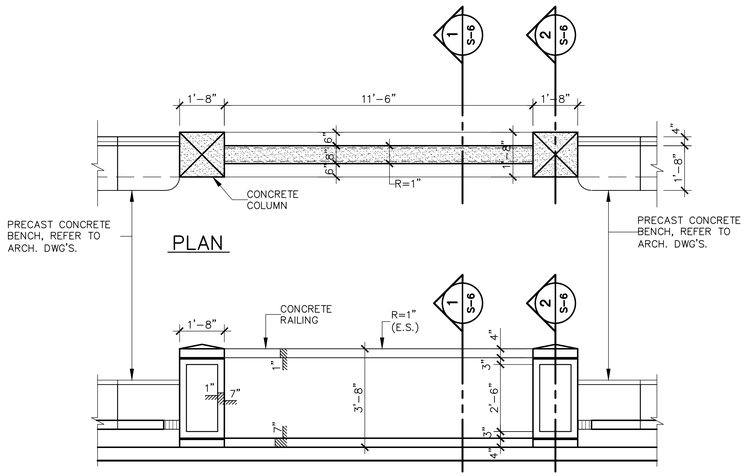

PLAN

ELEVATION

RAILING AND BENCH TYP. FLOOR PLAN

SCALE: 3/8" = 1'-0"

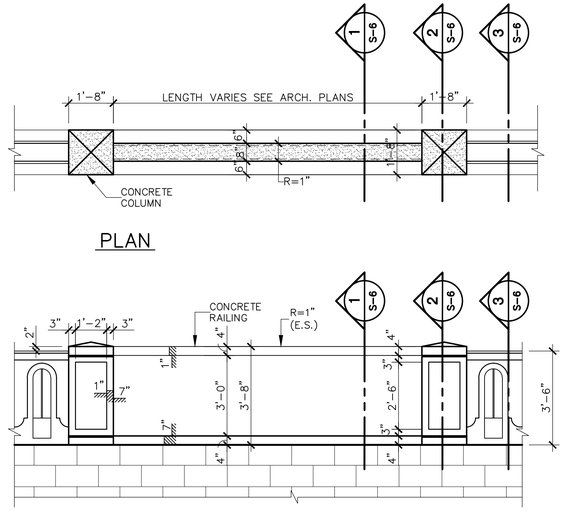

PLAN

ELEVATION

PROPOSED CONC. RAILING DETAIL

SCALE: 3/8" = 1'-0"

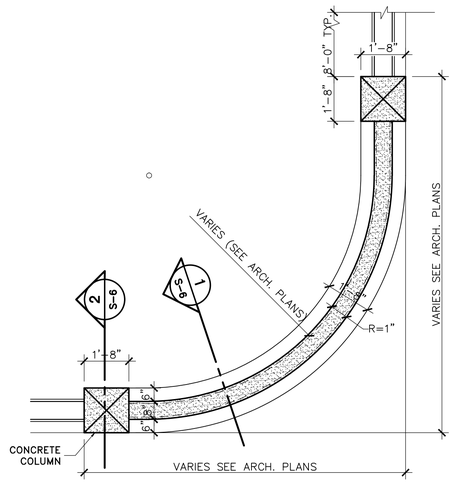

PLAN

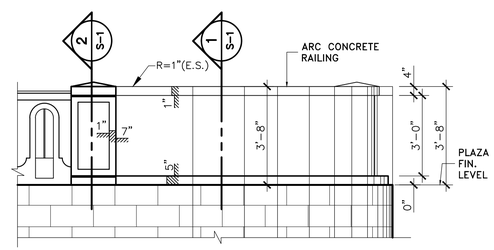

ELEVATION

PROPOSED CONC. RAILING DETAIL

SCALE: 3/8" = 1'-0"

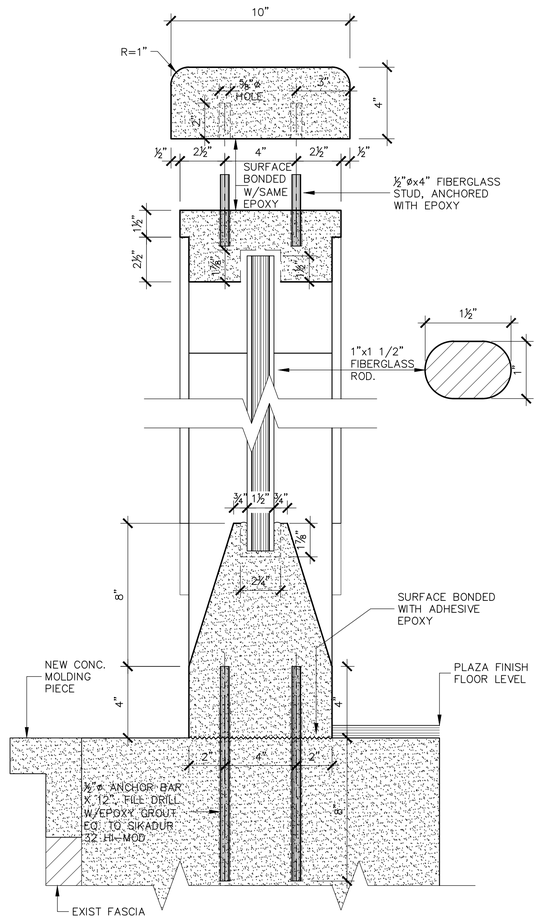

PREFABRICATED RAILING ANCHOR SECTION

SCALE: 3"=1'-0" — 3 / S-6

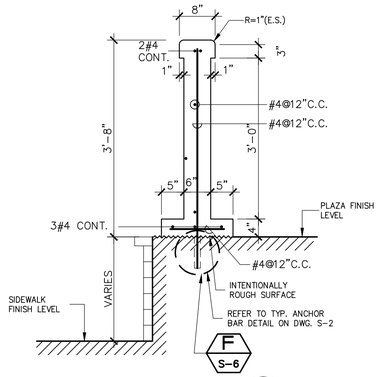

SECTION

SCALE: 3/4"=1'-0" — 1 / S-6

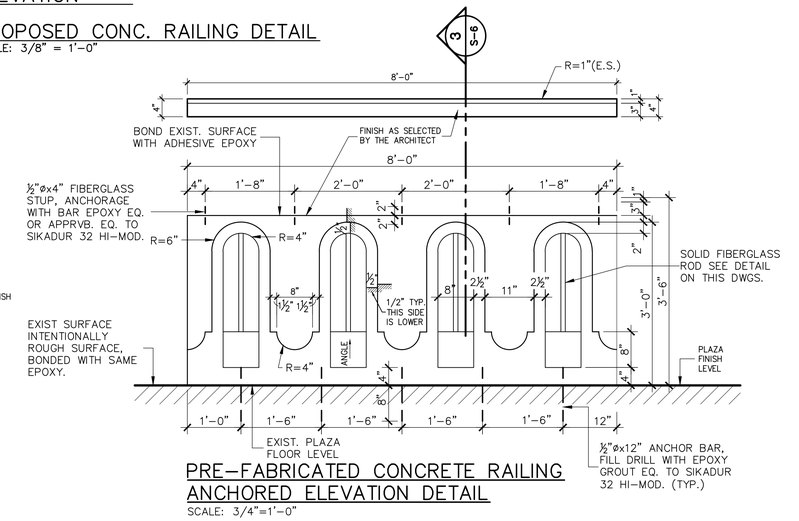

PRE-FABRICATED CONCRETE RAILING ANCHORED ELEVATION DETAIL

SCALE: 3/4"=1'-0"

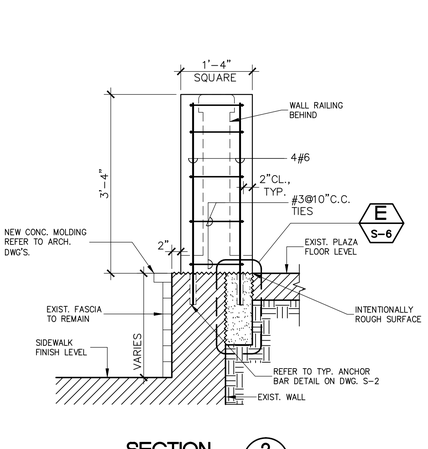

SECTION

SCALE: 3/4"=1'-0" — 2 / S-6

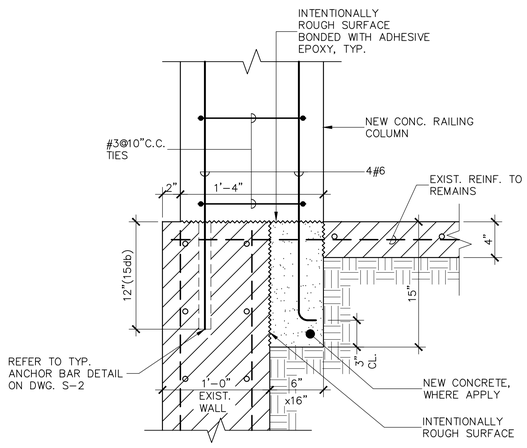

DETAIL

SCALE: 1 1/2"=1'-0" — E / S-6

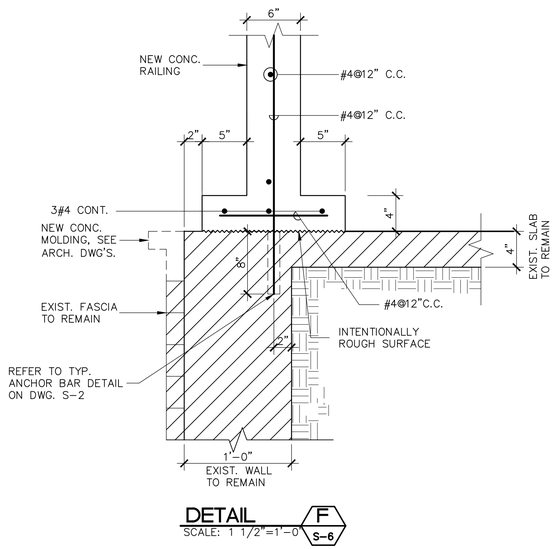

DETAIL

SCALE: 1 1/2"=1'-0" — F / S-6

REVITALIZATION OF
LUIS MUÑOZ RIVERA PLAZA
IN THE URBAN CENTER
ARECIBO, PUERTO RICO

IGLESIAS • VAZQUEZ and ASSOCIATES
ENGINEERS • ARCHITECTS • PLANNERS
320 FORTALEZA STREET 2nd FLOOR SAN JUAN, PUERTO RICO 00902 TELS. 721-4545 721-4546

SHEET TITLE:
CONCRETE RAILINGS PLAN, ELEV., STRUCTURAL SECTIONS AND DETAILS
SCALE: AS SHOWN

CODE NO: 08-903-

DRAWING NO: S-6

DATE	REVISIONS

SHEET NO: OF 00

N:\Pro\ARECIBO\903 PLAZA ARECIBO\DWG'S\036-903S-6.dwg

JOSE DE DIEGO AVE.

PALMA STREET

MARIA DE HOSTOS STREET

GONZALEZ MARIN STREET

3" C.O.G.

FLOOR BOX HYDRANT PIPE TO BE ABANDONED

VALVE

2"ø C.W. COPPER TYPE "K"

2"ø WATER METER BOX

1"ø C.W. COPP. "K"

EXISTING PIPE TO BE CAP (VARIES PIPE DIAMETER)

CHILL WATER COPP. "K"

2"ø C.W. TYPE K

2"ø WATER RETURN SCH. 80

EXISTING 4"ø PVC SDR 18 TO REMAIN

3/8"ø SHILL WATER TYPE K

3"ø SCH. 40 DRAIN PIPE

3"C.O.G.

1 1/2" DRAIN

EXISTING C.B.

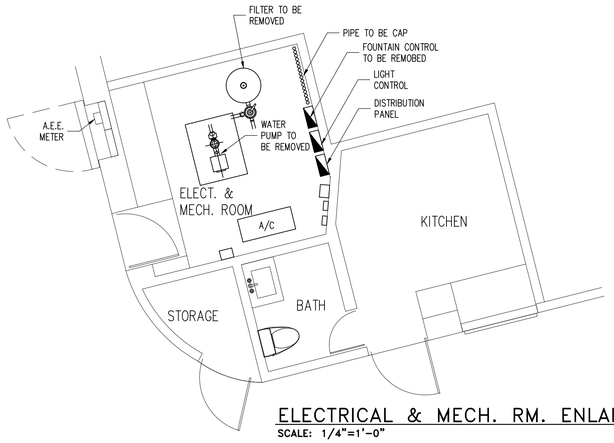

ELECTRICAL & MECH. RM. ENLARGED PLAN
SCALE: 1/4"=1'-0"

EXISTING AND DEMOLITION
PLAZA PLUMBING DISTRIBUTION PLAN
SCALE: 3/32"=1'-0"

NOTE:
1- THE CONTRACTOR WILL DISPOSE OF ALL THE EQUIPMENT AND MATERIALS REMOVED.

2- FOR DETAILS SEE ENLARGED PLAN IN THIS DWG.

3- THE CONTRACTOR WILL TRANSPORT AND STORE THESE MATERIALS / EQUIPMENT AT A LOCATION AS INSTRUCTED THE MUNICIPALITY.

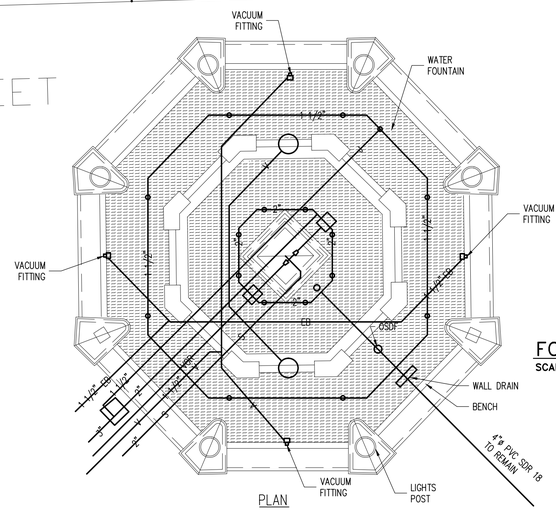

FOUNTAIN ENLARGED PLAN
SCALE: 1/4"=1'-0"

REVITALIZATION OF
LUIS MUÑOZ RIVERA PLAZA
IN THE URBAN CENTER
ARECIBO, PUERTO RICO

IGLESIAS • VAZQUEZ and ASSOCIATES
320 FORTALEZA STREET 2nd FLOOR SAN JUAN, PUERTO RICO 00902 TELS. 721-4545 721-4546
ENGINEERS • ARCHITECTS • PLANNERS

SHEET TITLE:
EXISTING AND DEMOLITION
PLAZA PLUMBING DIST. PLAN
SCALE: AS SHOWN

CODE NO:
08-903-

DRAWING NO:
PD-1

DATE	REVISIONS

SHEET NO:
OF
00

N:\Proj\ARECIBO\903 PLAZA ARECIBO\DWG'S\030-903PD-1.dwg

GENERAL PLUMBING NOTES

1	ALL PLUMBING SHALL BE IN STRICT ACCORDANCE WITH THE REGULATIONS OF THE DEPARTMENT OF HEALTH OF PUERTO RICO, THE LOCAL BUILDING CODE, THE INTERNATIONAL PLUMBING CODE 2015 AND THE SPECIFICATIONS ISSUED FOR THIS PROJECT.
2	SIZES SHOWN IN FIXTURES SCHEDULE ARE MINIMUM AND SHALL BE INCREASED AS NECESSARY TO COMPLY WITH CODE REQUIREMENTS OR AS SHOWN ON DRAWINGS
3	GATE VALVES SHALL BE EQUAL OR APPROVED EQUAL TO WATTS WGV-X IN ACCORDANCE WITH THESE SPECIFICATIONS OR AS CALLED ON DRAWINGS.
4	ALL VALVES NOT EXPOSED SHALL BE PROVIDED MAINTENANCE, ACCESS DOOR SHALL BE AS SPECIFIED OR AS REQUIRED BY THE ARCHITECT.
5	LONG SWEEP BENDS OR LONG SWEEP FITTINGS SHALL BE PROVIDED AT THE BASE OF ALL STACKS.
6	SINGLE AND DOUBLE SANITARY TEES AND QUARTER BENDS SHALL BE USED IN THE DRAINAGE LINES ONLY WHERE THE DIRECTION OF FLOW IS FROM HORIZONTAL TO VERTICAL
7	ALL HORIZONTAL PORTION OF SOIL OR WASTE STACK AND BRANCHES SMALLER THAN 4" SHALL SLOPE 1/4" PER FOOT, ALL OTHER SHALL SLOPE 1/8" PER FOOT
8	THE PLUMBING CONTRACTOR SHALL DETERMINE THE EXACT LOCATION OF EXIST. SANITARY AND WATER PIPING SERVING AND CONNECT TO THEM WITH THE PROPER SIZE AS SHOWN ON THE DRAWINGS. SEE NOTE NO. 17.
9	THE PLUMBING CONTRACTOR SHALL PROVIDE ROUGHING-IN AND INSTALL ALL PLUMBING FIXTURES AND/OR EQUIPMENT WHICH ARE SUPPLIED BY OTHERS.
10	THE PLUMBING CONTRACTOR SHALL DETERMINE THE EXACT LOCATION OF THE PIPING TO AVOID ANY INTERFERENCE WITH PIPING AND/OR EQUIPMENT BEING INSTALLED BY OTHER CONTRACTOR
11	THESE NOTES AS WELL AS THE LEGEND AND DETAILS APPLIES TO ALL PLUMBING WORKS FOR THE PROJECT.
12	FOR, FIXTURES AND EQUIPMENT NOT LISTED IN SCHEDULE, SEE CONTRACT SPECIFICATIONS
13	THE CONTRACTOR SHALL FURNISH AND SET IN PLACE BEFORE CONCRETE POURING ALL NECESSARY SLEEVES FOR WASTE OR SOIL, VENT HOT AND COLD WATER LINES, THESE SLEEVES SHALL BE AS SPECIFIED OR REQUIRED BY THE ARCHITECT.
14	CLEANOUTS SHALL BE NOT MORE THAN 50 FEET APART IN HORIZONTAL DRAINAGE LINES OF 4" NOMINAL DIAMETER OR LESS AND NOT MORE THAN 100 FEET APART FOR LARGER PIPES.
15	CLEANOUTS SHALL BE THE SAME NOMINAL SIZE OF THE PIPES UP TO 4" AND NOT LESS THAN 4" LARGER PIPING.
16	THE BUILDING SEWER, WHEN INSTALLED IN THE SAME TRENCH WITH THE WATER SERVICE PIPE, SHALL BE SO INSTALLED AS TO REMAIN WATERTIGHT AND ROOT RESISTANT, THE FOLLOWING CONDITION MUST BE MET: A. THE WATER-SERVICE PIPE MUST BE PLACED ON SOLID SHELF AT THE SIDE OF THE TRENCH AND MUST BE INSTALLED AT LEAST 12" ABOVE, THE TOP LEVEL OF THE BUILDING SEWER PIPE. B. THE WATER-SERVICE PIPE SHOULD BE IN ONE PIECE BETWEEN THE BLDG. AND THE WATER MAIN. C. THE BUILDING SEWER SHALL BE TESTED AFTER INSTALLATION WITH NOT LESS THAN 10'-0" HEAD WATER OR BY MEANS OF AN EQUIVALENT TEST.
17	THE PLUMBING CONTRACTOR SHALL LEAVE CLEAN AND CLEAR OF DEBRIS FOR ARCHITECT APPROVAL A SECTION OF 10'-0" LONG OF EXISTING SANITARY LINE BEFORE DOING ANY PLUMBING WORK OR CONNECTING NEW SOIL OR WASTE LINE.
18	IN EXISTING WALLS AND/OR FLOORS WHERE NEW WATER, SANITARY OR VENTILATION LINES RUN HORIZONTAL AND/OR VERTICAL WAY, THE CONTRACTOR SHALL CUT OR DEMOLISH THE NECESSARY AREA TO ALLOW THE WORK. AFTER FINISHING THE PIPE OR PIPES PLACING THE CONTRACTOR MUST REPAIR THE AFFECTED AREA, FINISHING IT WITH CEMENT PLASTER AND PAINT TO MATCH ADJACENT WALLS.
19	WHEN PLUMBING FIXTURES ARE TO BE INSTALLED IN NEW CONCRETE BLOCK WALL, CELLS SHALL BE WELL FILLED WITH CEMENT MORTAR.
20	WHEN IN EXISTING BUILDING NEW PLUMBING FIXTURES ARE TO BE INSTALLED IN SUBSTITUTION OF EXISTING FIXTURES, THE PLUMBING CONTRACTOR SHALL DETERMINE THE EXACT LOCATION OF EXISTING WATER, SANITARY AND VENTILATION PIPES AND CONNECT THEM WITH PROPER FITTINGS TO THE NEW FIXTURES ROUGHING-IN-. FOR REPAIRING THE AFFECTED AREA REFERS TO NOTE NO. 18.
21	VENT PIPING SHOULD BE INSTALLED IN PRACTICAL ALIGNMENT AND SLOPED UPWARD CONTINUOUSLY FROM ITS LOWEST CONNECTION WITH SOIL OR WASTE PIPING TO ITS TERMINAL IN THE ATMOSPHERE ABOVE BUILDING ROOF.
22	REQUIREMENTS: NO DRAINAGE OR PLUMBING SYSTEM OR PART THERE OF SHALL BE COVERED UNTIL IT HAS BEEN INSPECTED, TESTED AND ACCEPTED AS PRESCRIBED ON DRAWINGS AND/OR INTERNATIONAL PLUMBING CODE. THIS REQUIREMENT IS IN REFERENCE TO POSSIBLE TIGHTNESS OF THE PIPING UNDERGROUND OR BUILT INTO THE WALL IT IS FAR LESS COSTLY TO TEST THE WORK PROPERLY WHEN FIRST INSTALLED THAN LATER TO HAVE REMOVE A PLASTERED WALL OR CUT OUT A CONCRETE FLOOR. THE COST INVOLVED IN PROVIDING NECESSARY TEST PLUG, NIPPLES, PUMPS, AND LABOR TO PREPARE FOR THE TEST IS UP THE LICENSED PLUMBER OR PLUMBING CONTRACTOR. THE TEST AND INSPECTIONS SHOULD BE CONDUCTED AS REQUIRED BY SECTION 312 OF THE INTERNATIONAL PLUMBING CODE 2015.
23	ALL SANITARY AND WATER PIPES CONNECTING TO ALL STRUCTURES SHALL BE OF FLEXIBLE TYPE.
24	PROVIDE ELECTRICAL SUPPLY & OUTLET FOR PLUMBING FIXTURE OR ACCESSORIES ACCORDING TO THE MANUFACTURER BE REQUIRE IN COORDINATION WITH THE ELECTRICAL DESIGN.

SYMBOLS AND ABBREVIATIONS

ABBREVIATIONS		SYMBOLS AND LEGEND
S.	SOIL PIPE	S.
S.S.	SOIL STACK PIPE	S.S.
S.D.	STORM DRAIN PIPE	S.D.
R.L.	RAIN LEADER DRAIN PIPE	R.L.
W.	WASTE PIPE	W.
W.S.	WASTE STACK PIPE	W.S.
V.	VENT PIPE	V.
S.V.	STACK VENT PIPE	S.V.
V.S.	VENT STACK PIPE	V.S.
V.T.R	VENT THROUGH ROOF	V.T.R.
C.W.	COLD. WATER	CW
H.W.	HOT WATER	HW
H.W.R.	HOT WATER RETURN	HWR
C.O.F.W.G.	CLEANOUT FLUSH WITH GROUND	C.O.F.W.G.
C.O.F.W.F.	CLEANOUT FLUSH WITH FLOOR	C.O.F.W.F.
C.O.F.W.W.	CLEANOUT FLUSH WITH WALL	C.O.F.W.W.
C.O. PLUG	CLEANOUT PLUG	C.O. PLUG
F.D.	FLOOR DRAIN	F.D.
F.F.	FINISHED FLOOR	
A.F.F.	ABOVE FINISHED FLOOR	
A.F.R.	ABOVE FINISHED ROOF	
P.V.C.	POLYVINYL CHLORIDE PLASTIC OR RESIN)	
HANGER	HANGER LOCATION (NOT MORE THAN 6 FT. APPART)	
HANGER	HANGER LOCATION (NOT MORE THAN 6 FT. APPART)	

SOIL , WASTE AND VENT PIPES TO BE IN PVC SCH. 40 OR AS NOTED ON DRAWINGS

COLD WATER, HOT WATER AND HOT WATER RETURN PIPES WILL BE INSTALLED IN PEX TYPE PIPING. ALL PARTS TO TO BE USED FOR CONNECTION IN THIS PEX PIPE WILL BE IN COPPER. USE PEX BRASS FITTING WITH PEX TUBING AND TIGHTEN TO THE PIPE USING CRIMP RINGS OR PINCH CLAMPS WITH THE SPECIFIC TOOLS FOR PEX PIPE. FOLLOW ALL INSTRUCTION INCLUDED WITH TOOLS, ACCESSORIES AND FASTENERS.

OTHER TYPES OF MATERIAL IN THE PIPES WILL BE SPECIFIED ON THE DRAWINGS.

PLUMBING FIXTURES SCHEDULE

PLUMBING FIXTURES TO BE EQ. OR APP EQ. TO: AMERICAN STANDARD (A.S.), CHICAGO FAUCET (C.F.) McGUIRE (McG), ELKAY (E), WATTS (W), J.R.SMITH (J.R.S.), MUSTEE (M) & SLOAN ROYAL (S.R.).

ALL PLUMBING FIXTURES AND FITTING SHALL BE INSTALLED FOLLOWING MANUFACTURER'S RECOMMENDATIONS, INSTALLATION INSTRUCTIONS AND CURRENT ROUGHING-IN DIMENSIONS SHALL BE FURNISHED WITH EACH FIXTURES BY PLUMBING FIXTURES MANUFACTURER.
DO NOT ROUGH-IN WITHOUT CERTIFIED DIMENSIONS.

MK'D.	FIXTURES	SOIL/ WASTE	VENT	SUPPLY COLD	SUPPLY HOT	FIXTURES MFR'S AND MODEL NUMBER	QTY.	DESCRIPTION
1	NOZZLE 1	–	–	3"	–	RCN-300 ROMAN FONTAIN	1	
2	PENETRATION 1	–	–	3"	–	RWS-300-S ROMAN FONTAIN	1	
3	VALVE 1	–	–	3"	–	RBB-300-T ROMAN FONTAIN	1	
4	NOZZLE 2	–	–	6"	–	RCN-150 ROMAN FONTAIN	1	
5	PENETRATION 2	–	–	6"	–	RWS-150-S ROMAN FONTAIN	1	
6	VALVE 2	–	–	6"	–	RBB-150-T ROMAN FONTAIN	1	
7	ANTI-VORTEX 1	–	–	6"	–	RAVS-2400-CC ROMAN FONTAIN	2	
8	ANTI-VORTEX 2	–	–	2"	–	RAVS-800-F-SS ROMAN FONTAIN	2	
9	FLOOR DRAIN	–	–	2"	–	RFD-300 ROMAN FONTAIN	1	
10	WALL OVER FLOW	3"	–	–	–	ROVS-200-W ROMAN FONTAIN	2	
11	FILL MANIFOLD	–	–	–	–	ROVS-075-NS ROMAN FONTAIN	1	ON MECH. ROOM
12	INLET FITTING	–	–	1"	–	RIF-150-A ROMAN FONTAIN	1	
13	LIGHT RGB	–	–	–	–	RLF-FM-RGB-24VDC-36W ROMAN FONTAIN	16	TO CONTROL P
14	J-BOX	–	–	–	–	RJB-4-100-F ROMAN FONTAIN	4	TO CONTROL P
15	POTTING COMPOUND	–	–	–	–	RPC-2114-D ROMAN FONTAIN	6	
16	SKIMMER	–	–	2"	–	RPS-150-FA ROMAN FONTAIN	2	
17	RETURN FITTING	–	–	2"	–	REF-150-WS ROMAN FONTAIN	2	
18	DISPLAY PUMP SKID	–	–	–	–	RSM-2F-10HP-3PH ROMAN FONTAIN	1	ON MECH. ROOM
19	FILTER PUMP SKID	–	–	–	–	RSFS-60D-1HP-RBU ROMAN FONTAIN	1	ON MECH. ROOM
20	ANEMOMETER	–	–	–	–	RWC-A-BRCKT ROMAN FONTAIN	1	ON MECH. ROOM (ROOF AREA)
21	CONTROL PANEL	–	–	–	–	RPCP/RLCP-RGB ROMAN FONTAIN	1	ON MECH. ROOM
22	WATER LEBEL SENSOR	–	–	–	–	RCOM-WNA ROMAN FONTAIN	1	ON MECH. ROOM

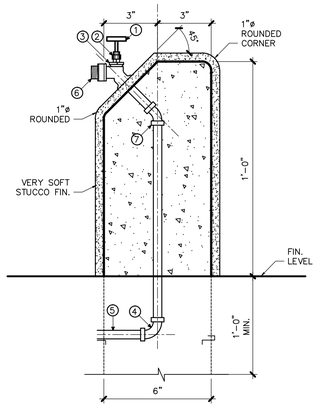

LEGEND:

MK'D	DESCRIPTION
①	LOCKSHIELD KEY-RED BRONZE
②	LOCKSHIELD-RED BRONZE
③	SILLCOCK EQUAL TO NIBCO FIG.NO.NIBCO 763 VB-LS
④	90° ELL CxC /12" CC
⑤	1/2"ø C.W.
⑥	BACKFLOW PREVENTER EQ. OR APP. EQ. TO WATTS 8A-CODE NO. 0061877-3/4" FEMALE INLET 3/4"ø MALE OUTLET.
⑦	45° ELL CxC /12" CC

HB P-1 HOSE BIBB INSTALLATION DET.

SCALE: AS NOTED

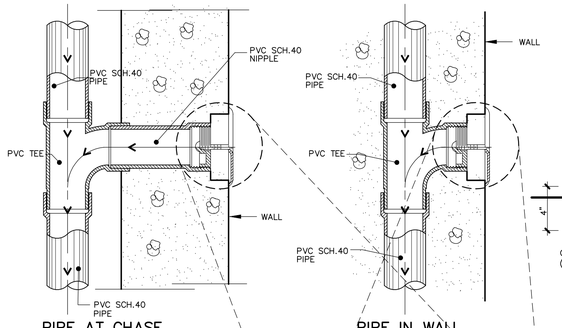

PIPE AT CHASE
N.T.S

PIPE IN WALL
N.T.S

CLEANOUT FLUSH WITH GROUND
SC. 1 1/2"=1'-0"

"A" PIPE DIAM. SIZE	"B" DIAM.
1 1/2"	4 1/4"
2"	
2 1/2"	
3"	5 1/2"
3 1/2"	
4"	
5"	7"
6"	9 1/4"
8"	11 1/4"
10"	

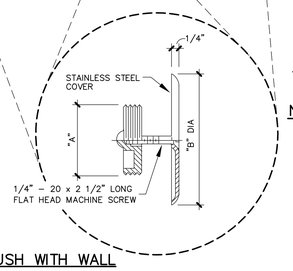

CLEANOUT FLUSH WITH WALL
EQ. OR APP. EQ. J.R. SMITH FIGURE NO. 4472

NOTE:

CLEANOUT FLUSH WITH FLOOR EQ. OR APP. EQ. J.R. SMITH FIGURE NO. 4052.

CLEANOUT FLUSH WITH GROUND EQ. OR APP. EQ. TO J.R.SMITH FIGURE NO.4292

CO P-1 CLEANOUT DETAILS

SCALE: AS NOTED

REVITALIZATION OF
LUIS MUÑOZ RIVERA PLAZA
IN THE URBAN CENTER
ARECIBO, PUERTO RICO

IGLESIAS•VAZQUEZ and ASSOCIATES
ENGINEERS • ARCHITECTS • PLANNERS
320 FORTALEZA STREET 2nd FLOOR SAN JUAN, PUERTO RICO 00902 TELS. 721-4545 721-4546

SHEET TITLE: GENERAL PLUMBING NOTES SCHEDULES AND DETAILS
SCALE: AS SHOWN

CODE NO: 08-903-

DRAWING NO: P-1

DATE	REVISIONS

SHEET NO: OF 00

N:\Users\Napi\2024\ARECIBO PLAZA PUBLICA\2024-26 Norberto Medina - Plomeria\003-903P-1 - P-2 - PD-1 Standard.zip (Unzipped Files)\031-903P-1 GENERAL NOTES AND DETAILS.dwg

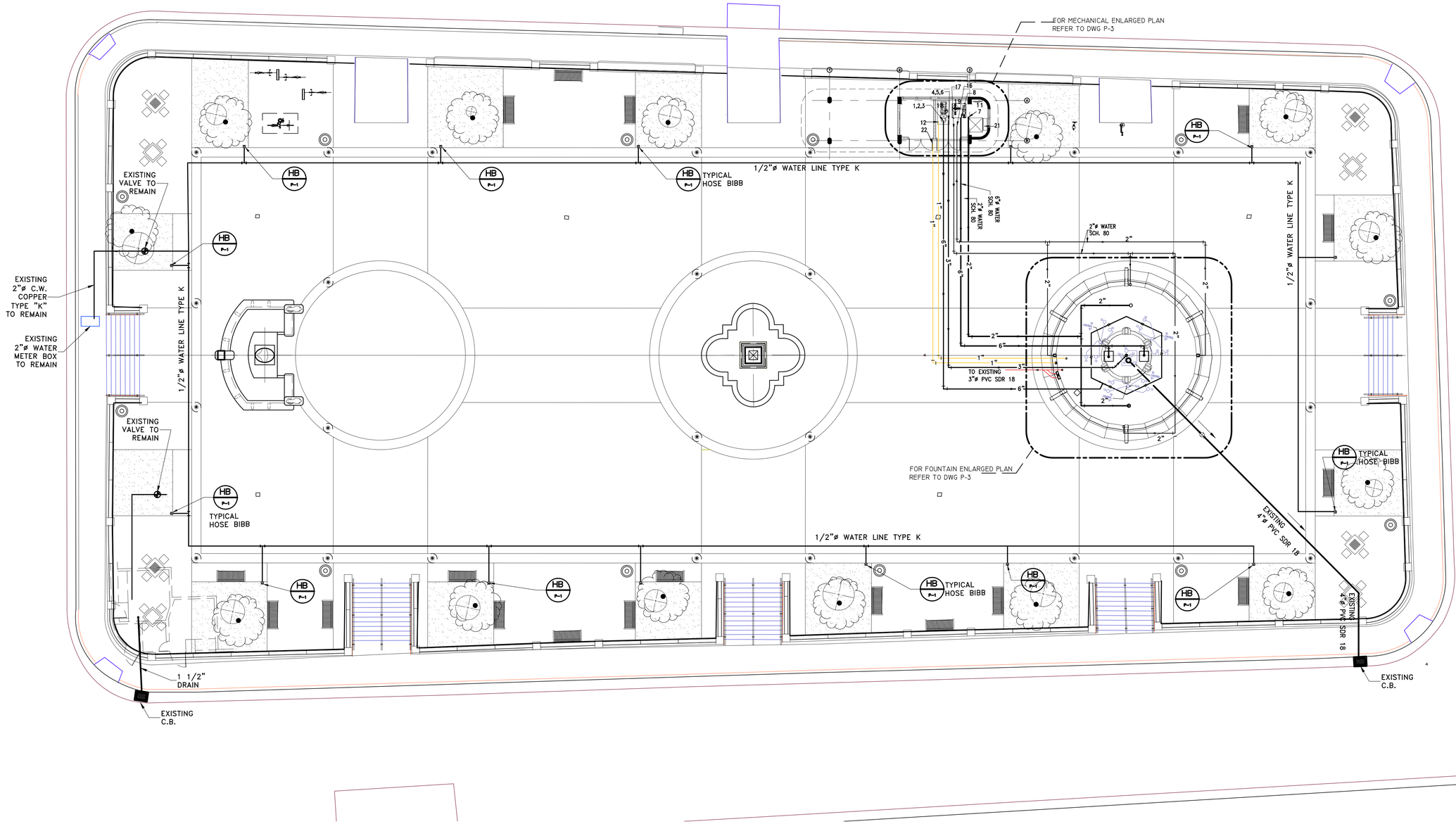

PROPOSED
PLAZA PLUMBING DISTRIBUTION PLAN

SCALE: 3/32"=1'-0"

NOTE:
1- FOR EQUIPMENT DESCRIPTION SEE SCHEDULE ON SHEET P-1

2- FOR HOSE BIBB DETAIL SEE SHEET P-1

REVITALIZATION OF
LUIS MUÑOZ RIVERA PLAZA
IN THE URBAN CENTER
ARECIBO, PUERTO RICO

IGLESIAS•VAZQUEZ and ASSOCIATES
320 FORTALEZA STREET 2nd FLOOR SAN JUAN, PUERTO RICO 00902 TELS. 721-4545 721-4546
ENGINEERS • ARCHITECTS • PLANNERS

SHEET TITLE:
PROPOSED
PLAZA PLUMBING DIST. PLAN
SCALE: AS SHOWN

CODE NO:
08-903-

DRAWING NO:
P-2

DATE	REVISIONS

SHEET NO:
OF
00

N:\Proj\ARECIBO\903 PLAZA ARECIBO\DWG'S\031-903P-2-P3.dwg

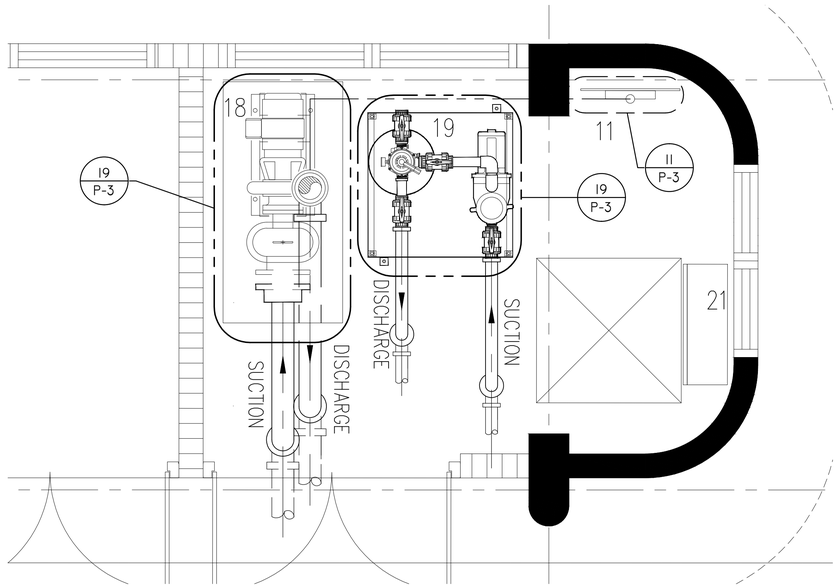

MECHANICAL ENLARGED PLAN
SCALE: 3/8"=1'-0"

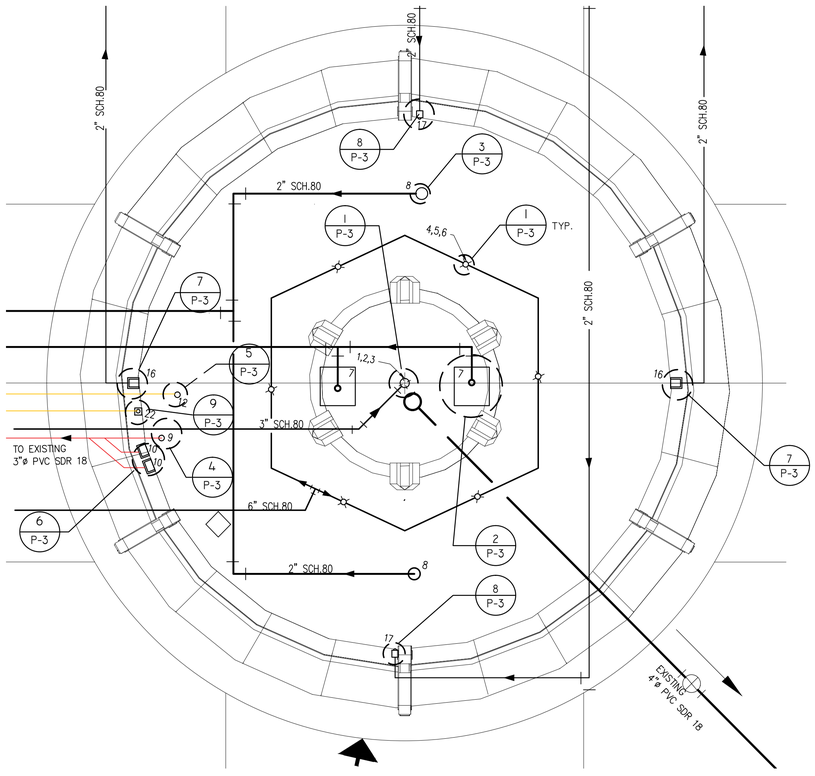

FOUNTAIN ENLARGED PLAN
SCALE: 1/4"=1'-0"

NOTE:
1- FOR ELECTRICAL EQUIPMENT SEE ELECTRICAL DWG ON SHEET E-
2- FOR

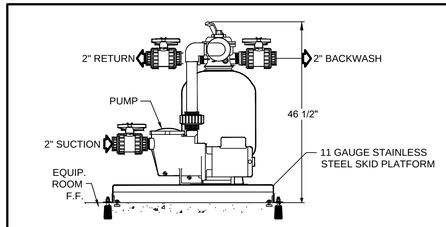

SIDE ELEVATION

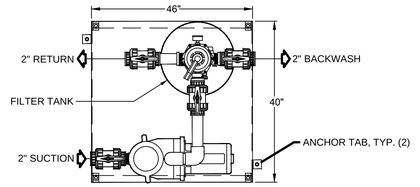

PLAN VIEW

19 P-3 FILTER PUMP SKID DET.
N.T.S

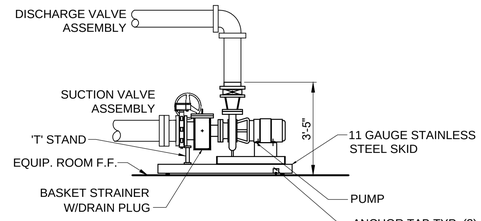

SIDE ELEVATION

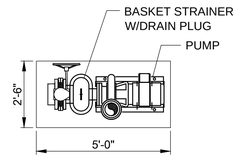

PLAN VIEW

18 P-3 PUMP SKID DET.
SCALE: 3/8"=1'-0"

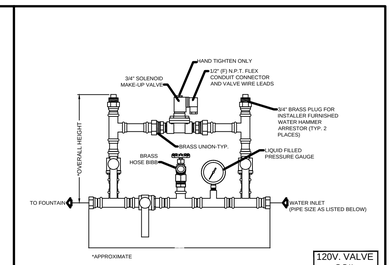

FLOW ORIENTATION
RIGHT-TO LEFT

TECHNICAL DATA

MODEL NO.	FILL LINE PIPE SIZE	APPROX. MANUAL FILL RATE/50 P.S.I.	*OVERALL LENGTH	*OVERALL HEIGHT
RMS-075-NS	3/4"	12 GPM	1'-11 1/2"	1'-0 1/2"
RMS-100-NS	1"	25 GPM	2'-0 1/2"	1'-0 7/8"
RMS-150-NS	1 1/2"	90 GPM	2'-3 1/2"	1'-0 1/2"
RMS-200-NS	2"	320 GPM	2'-8 1/2"	1'-3 3/8"

11 P-3 FILL MANIFOLD DET.
N.T.S

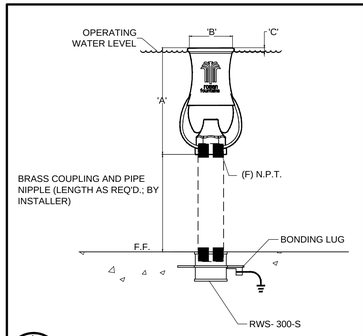

1 P-3 WATER NOZZLE DET.
N.T.S

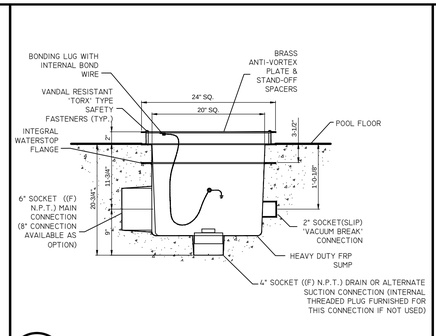

2 P-3 ANTI-VORTEX TYPE-1
N.T.S

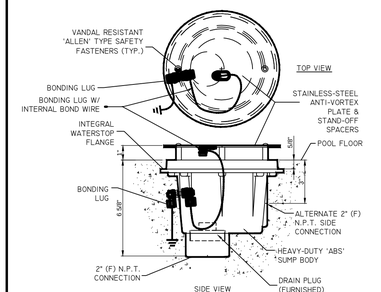

SIDE VIEW

3 P-3 ANTI-VORTEX TYPE-2
N.T.S

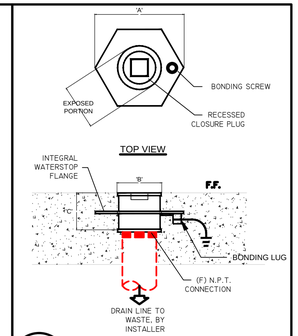

4 P-3 FLOOR DRAIN
N.T.S

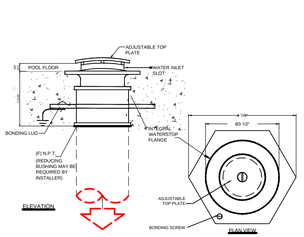

SIDE ELEVATION FRONT ELEVATION

TECHNICAL DATA

Model No.	Connection Size	Dimension 'A'	Dimension 'B'	Dimension 'C'	Dimension 'D'	Dimension 'E'	Open Area	Max. Drain Rate
ROVS-200-W	2"	10"	1-1/2"	6"	2-7/8	3.5" dia.	6.5 Sq. In.	20 GPM

6 P-3 WALL OVER FLOW DET.
N.T.S

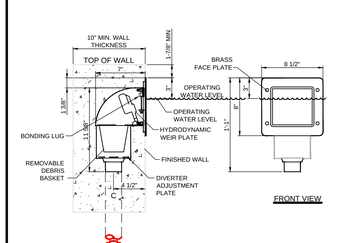

SIDE VIEW FRONT VIEW

7 P-3 SKIMMER DET.
N.T.S

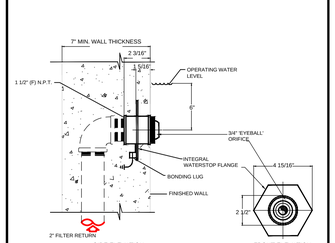

SIDE ELEVATION FRONT ELEVATION

NOTE: INSTALL WATERSTOP FLANGE FACE FLUSH TO FINISHED WALL.

8 P-3 RETURN FITTING DET.
N.T.S

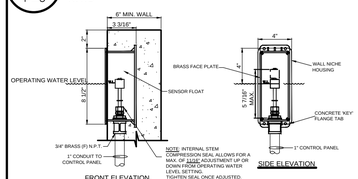

FRONT ELEVATION SIDE ELEVATION

9 P-3 INLET FITTING DET.
SCALE: 1 1/2"=1'-0"

5 P-3 INLET FITTING DET.
N.T.S

IGLESIAS•VAZQUEZ and ASSOCIATES
320 FORTALEZA STREET 2nd FLOOR SAN JUAN, PUERTO RICO 00902 TELS. 721-4545 721-4546
ENGINEERS • ARCHITECTS • PLANNERS

REVITALIZATION OF
LUIS MUÑOZ RIVERA PLAZA
IN THE URBAN CENTER
ARECIBO, PUERTO RICO

SHEET TITLE:
PROPOSED PLAZA PLUMBING DIST
ENLARGE PLAN AND DETAIL
SCALE: AS SHOWN

CODE NO:
08-903-

DRAWING NO:
P-3

SHEET NO:
OF
00

DATE	REVISIONS

N:\Proj\ARECIBO\903 PLAZA ARECIBO\DWG'S\031-903P-2-P3.dwg

NOTES:

1–THE ELECTRICAL INSTALLATION SHOWN ABOVE DEPICTS THE EXISTING ELECTRICAL INSTALLATION AT THE PLAZA & THE SURROUNDING SIDEWALK. ALL THE EXISTING LIGHTING POLES "●–◉R & ◉R" ARE TO BE REMOVED. THE EXISTING UNDERGROUND CONDUIT WORK AT THE PLAZA IS TO BE ABANDONED AND THE WIRING REMOVED. AT THE SIDEWALK, THE EXISTING CONDUIT IS TO REMAIN & BE REUSED, ALL WIRING IS NEW. ALL HOME RUNS IN THE EXISTING CONDUIT WORK TO BE RE–USED ARE TO BE RE–ROUTED TO NEW PANEL "PA".

2–THE USE OF THE TERM "REUSE EXISTING ELECTRICAL INSTALLATION AS MUCH AS POSSIBLE" MEANS THAT SAID INSTALLATION MUST BE IN ACCORDANCE WITH ALL EXISTING PREVAILING (CURRENT) SAFETY AND CONSTRUCTION CODES, STANDARDS AND PRACTICES AS WELL AS THE INSTALLATION BEING IN A WELL–PRESERVED STATE, BOTH PHYSICAL AND ELECTRICAL, SUITABLE FOR ITS REUSE.

KEY OF SYMBOLS:

- ●–◉R EXISTING POLE MOUNTED LIGHTING FIXTURE TO BE REMOVED IN SIDEWALK TOGETHER WITH POLE
- ◉R EXISTING POLE & LIGHTING FIXTURE TO BE REMOVED IN THE PLAZA AREA
- —R— EXISTING CONDUIT TO BE ABANDONED
- —RW— EXISTING CONDUIT TO BE RE–USED AS MUCH AS POSSIBLE, EXISTING WIRING TO BE REMOVED

EXISTING AND DEMOLITION PLAZA – ELECTRICAL INSTALLATION

SCALE: 1:200

NORTH

The Office of LEONARDO J. VIDAL
Consulting Engineers
Lic. no. 6092
P.O. Box 363164, San Juan, P.R. 00936-3164
Tels.: (787) 765-5631, Fax.: (787) 765-7399
Email: oficinaljv@gmail.com

LJV DRAWING HISTORY			LJV-DSB DESIGN STAGE	
PROJECT NO:	23-059		SCHEMATIC DWGS: (SD)	
DRAWING NO:	PE-1		PRELIMINARY DWGS: (PD)	
CAD FILE:	23-059/		DESIGN DEVELOPMENT DWGS: (DD)	
CAD SUBFILE:	23-059-PE001	-R00-BD	ADVANCED DWGS: (AD)	
PLOT DATE:	06.10.24		BID DWGS: (BD)	●
PLOT SCALE:	1:1		CONTRACT DWGS: (CD)	
ISSUE DATE:	06.10.24		RECORD DWGS: (RD)	
REMARKS:	NOT FOR CONSTRUCTION		-	%
RELATED PROJECTS:	-------------------------------			

DATE	REVISIONS

REVITALIZATION OF LUIS MUÑOZ RIVERA PLAZA IN THE URBAN CENTER
ARECIBO, PUERTO RICO

IGLESIAS • VAZQUEZ and ASSOCIATES
320 FORTALEZA STREET 2nd FLOOR SAN JUAN, PUERTO RICO 00902 TELS. 721-4545 721-4546
ENGINEERS · ARCHITECTS · PLANNERS

SHEET TITLE:
EXISTING AND DEMOLITION PLAZA–ELECTRICAL INSTALLATION
SCALE: AS SHOWN

CODE NO: 08–903–PE1

DRAWING NO: PE–1

SHEET NO: 3 OF 00

J:\2023\23-059 Plaza Publica Arecibo\00 Elec 2024-02-07\23-059-PE-001 demo plaza - Standard\23-059-PE-001 demo plaza.dwg

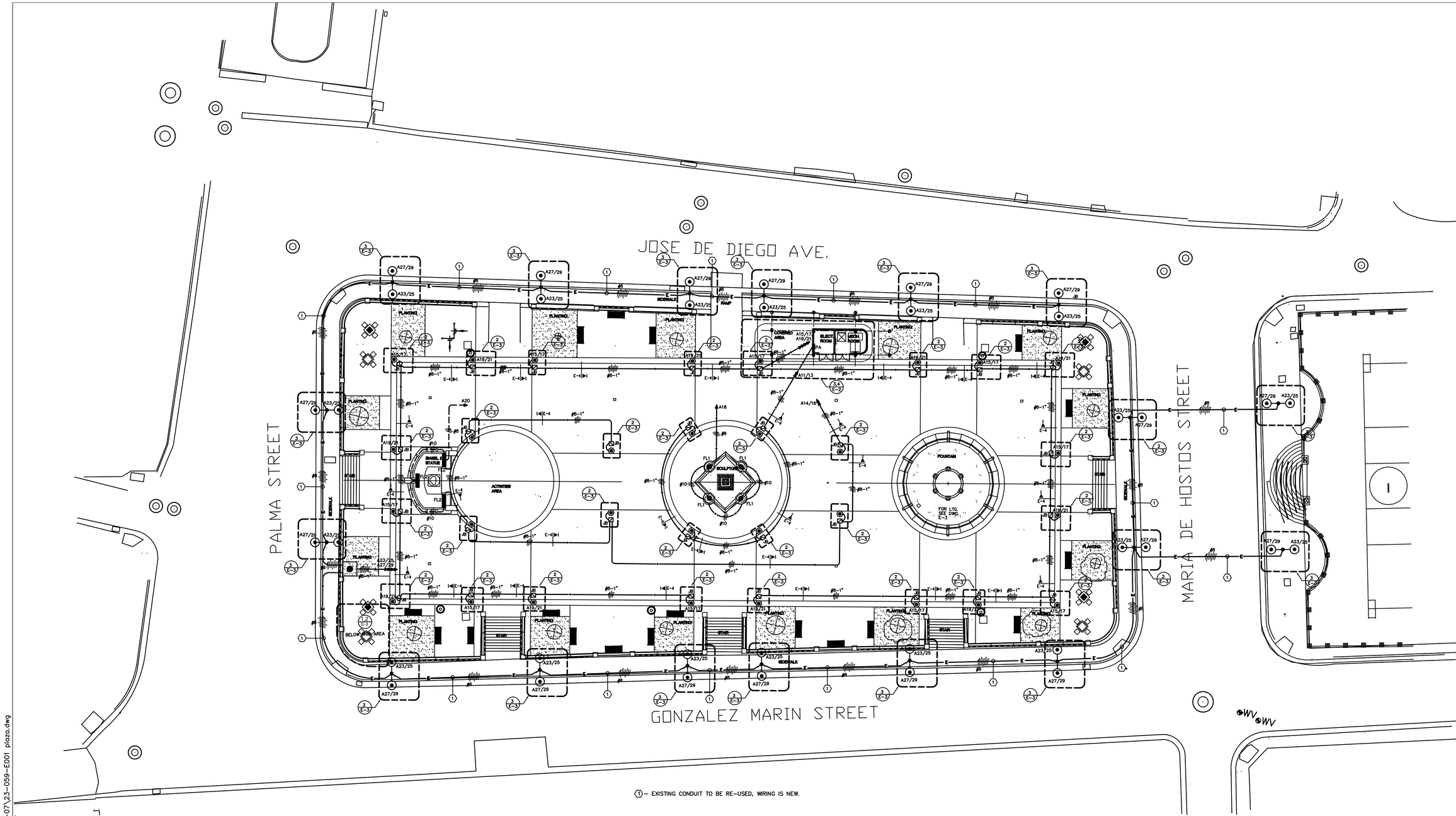

1 – EXISTING CONDUIT TO BE RE-USED, WIRING IS NEW.

PLAZA FLOOR PLAN – ELECTRICAL INSTALLATION

SCALE: 1/16"=1'-0"

NORTH

LJV DRAWING HISTORY		LJV-DSB DESIGN STAGE	
PROJECT NO:	23-059	SCHEMATIC DWGS: (SD)	
DRAWING NO:	E-1	PRELIMINARY DWGS: (PD)	
CAD FILE:	23-059/	DESIGN DEVELOPMENT DWGS: (DD)	
CAD SUBFILE:	23-059-E001 -R00- BD	ADVANCED DWGS: (AD)	
PLOT DATE:	06.10.24	BID DWGS: (BD)	●
PLOT SCALE:	1:1	CONTRACT DWGS: (CD)	
ISSUE DATE:	06.10.24	RECORD DWGS: (RD)	
REMARKS:	NOT FOR CONSTRUCTION	-	%
RELATED PROJECTS:	----------		

The Office of LEONARDO J. VIDAL Consulting Engineers
P.O. Box 362744, San Juan, P.R. 00936-2744
Tels.: (787) 765-5631 / Fax: (787) 765-7399
Email: info@ljvidal.com

DATE	REVISIONS

REVITALIZATION OF
LUIS MUÑOZ RIVERA PLAZA
IN THE URBAN CENTER
ARECIBO, PUERTO RICO

IGLESIAS • VAZQUEZ and ASSOCIATES
320 FORTALEZA STREET 2nd FLOOR SAN JUAN, PUERTO RICO 00902 TELS. 721-4545 721-4546
ENGINEERS • ARCHITECTS • PLANNERS

SHEET TITLE:
PLAZA FLOOR PLAN
ELECTRICAL INSTALLATION
SCALE: AS SHOWN

CODE NO:
08-903-

DRAWING NO:
E-1

SHEET NO:
OF
00

J:\2023\23-059 Plaza Publica Arecibo\00 Elec 2024-02-07\23-059-E001 plaza.dwg

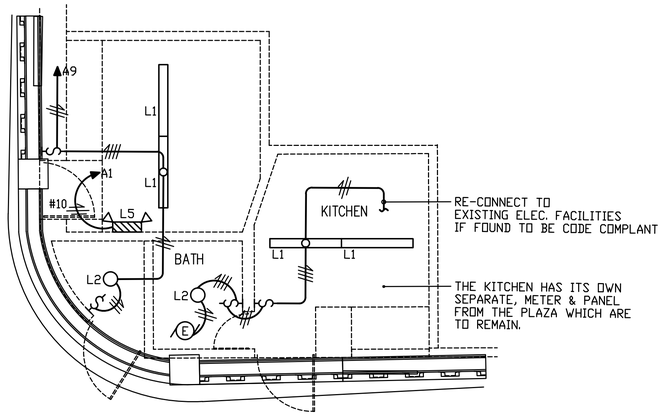

1 / E-2 KIOSK ELECTRICAL BLOW-UP-LIGHTING
SCALE: 1/4"=1'-0"

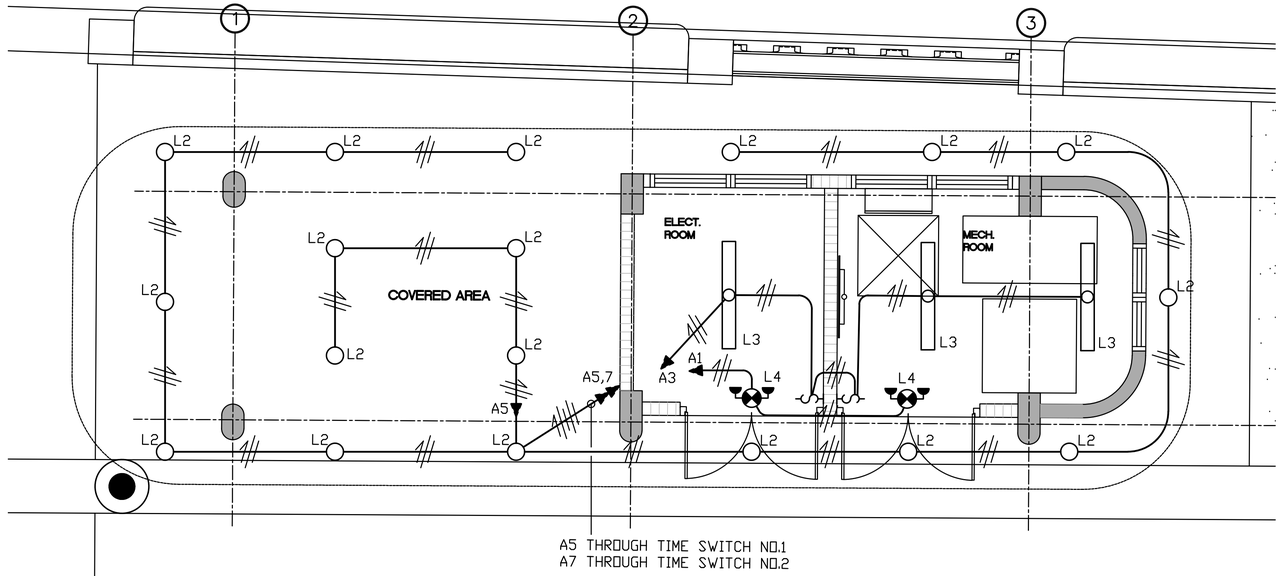

3 / E-2 ELECTRICAL & MECHANICAL ROOMS BLOW-UP-LIGHTING
SCALE: 3/8"=1'-0"

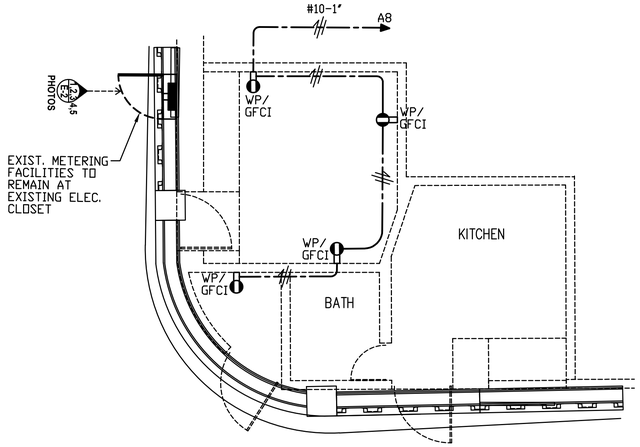

2 / E-2 KIOSK ELECTRICAL BLOW-UP-POWER
SCALE: 1/4"=1'-0"

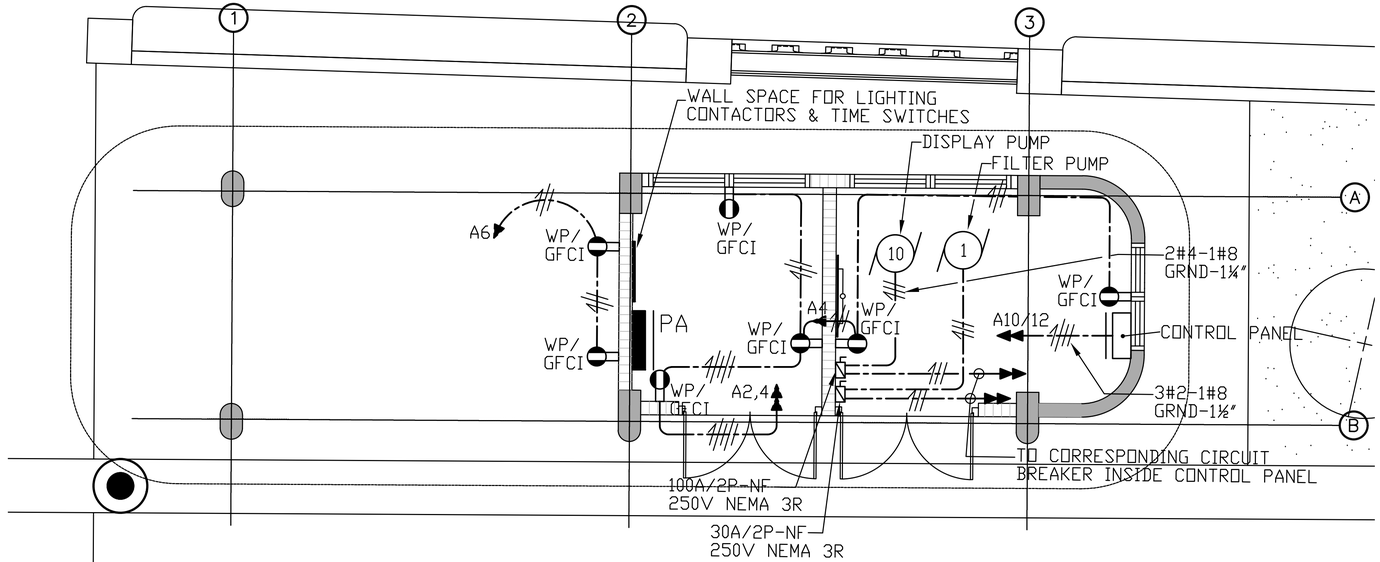

4 / E-2 ELECTRICAL & MECHANICAL ROOMS BLOW-UP-POWER
SCALE: 3/8"=1'-0"

LJV DRAWING HISTORY		LJV-DSB DESIGN STAGE	
PROJECT NO:	23-059	SCHEMATIC DWGS: (SD)	
DRAWING NO:	E-2	PRELIMINARY DWGS: (PD)	
CAD FILE:	23-059/	DESIGN DEVELOPMENT DWGS: (DD)	
CAD SUBFILE:	23-059-E002 -R00-BD	ADVANCED DWGS: (AD)	
PLOT DATE:	06.10.24	BID DWGS: (BD)	●
PLOT SCALE:	1:1	CONTRACT DWGS: (CD)	
ISSUE DATE:	06.10.24	RECORD DWGS: (RD)	
REMARKS:	NOT FOR CONSTRUCTION	-	℅
RELATED PROJECTS:	----------		

DATE	REVISIONS

REVITALIZATION OF
LUIS MUÑOZ RIVERA PLAZA
IN THE URBAN CENTER
ARECIBO, PUERTO RICO

IGLESIAS•VAZQUEZ and ASSOCIATES
320 FORTALEZA STREET 2nd FLOOR SAN JUAN, PUERTO RICO 00902 TELS. 721-4545 721-4546
ENGINEERS • ARCHITECTS • PLANNERS

SHEET TITLE:
ELECT. & MECH. ROOMS, KIOSK & FOUNTAIN AREA BLOW-UPS
SCALE: AS SHOWN

CODE NO:
08-903-

DRAWING NO:
E-2

SHEET NO:
OF
00

J:\2023\23-059 Plaza Publica Arecibo\00 Elec 2024-02-07\23-059-E002 blow-ups 1.dwg

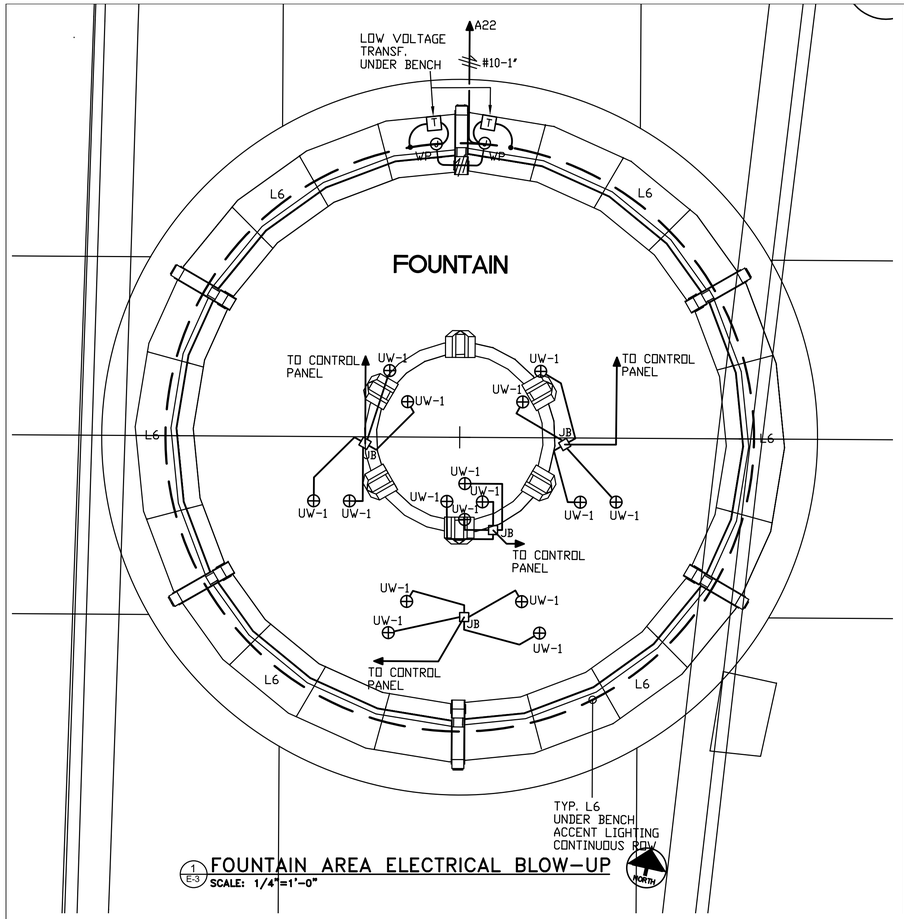

1 E-3 FOUNTAIN AREA ELECTRICAL BLOW-UP
SCALE: 1/4"=1'-0"

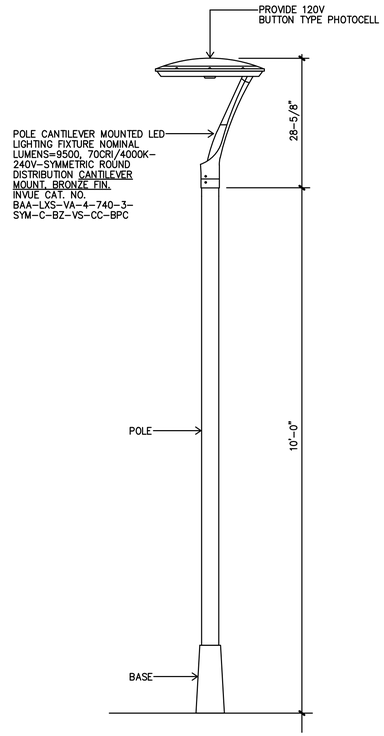

2 E-3 POLE LIGHT DETAIL-SINGLE MOUNTING
SCALE: NOT TO SCALE

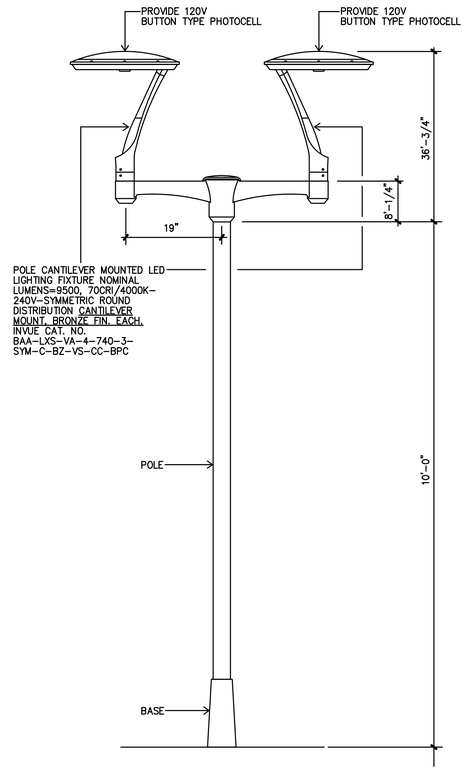

3 E-3 POLE LIGHT DETAIL-TWIN MOUNTING-180° APART
SCALE: NOT TO SCALE

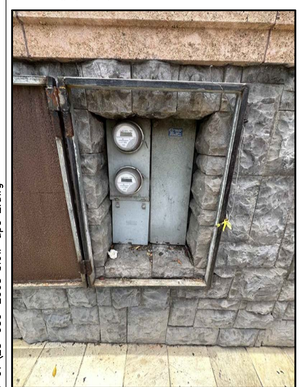

4 E-3 PHOTO #1
EXISTING METER BANK

5 E-3 PHOTO #2
EXISTING METER BANK

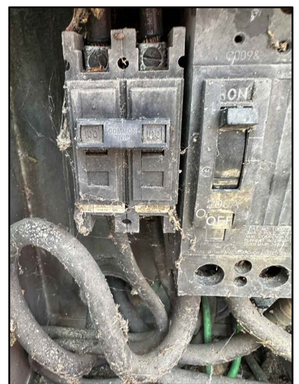

6 E-3 PHOTO #3
EXISTING METER BANK

7 E-3 PHOTO #4
EXISTING METER BANK

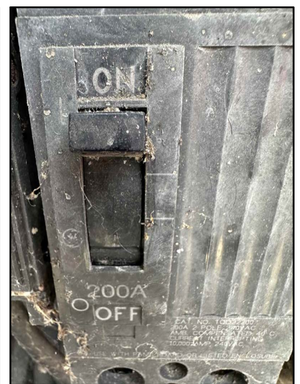

8 E-3 PHOTO #5
EXISTING METER BANK

LJV DRAWING HISTORY		LJV-DSB DESIGN STAGE	
PROJECT NO:	23-059	SCHEMATIC DWGS: (SD)	
DRAWING NO:	E-3	PRELIMINARY DWGS: (PD)	
CAD FILE:	23-059/	DESIGN DEVELOPMENT DWGS: (DD)	
CAD SUBFILE:	23-059-E003 -R00-BD	ADVANCED DWGS: (AD)	
PLOT DATE:	06.12.24	BID DWGS: (BD)	●
PLOT SCALE:	1:1	CONTRACT DWGS: (CD)	
ISSUE DATE:	06.12.24	RECORD DWGS: (RD)	
REMARKS:	NOT FOR CONSTRUCTION	-	%
RELATED PROJECTS:	----------		

DATE	REVISIONS

REVITALIZATION OF
LUIS MUÑOZ RIVERA PLAZA
IN THE URBAN CENTER
ARECIBO, PUERTO RICO

IGLESIAS • VAZQUEZ and ASSOCIATES
ENGINEERS • ARCHITECTS • PLANNERS
320 FORTALEZA STREET 2nd FLOOR SAN JUAN, PUERTO RICO 00902 TELS. 721-4545 721-4546

SHEET TITLE:
ELECT. & MECH. ROOMS, KIOSK & FOUNTAIN AREA BLOW-UPS
SCALE: AS SHOWN

CODE NO:
08-903-

DRAWING NO:
E-3

SHEET NO:
OF
00

J:\2023\23-059 Plaza Publica Arecibo\00 Elec 2024-02-07\23-059-E003 blow-ups 2.dwg

(1) DEMOLITION NOTES - ELECTRICAL:

1.– **GENERAL:**

AS PART OF HIS/HER BID, THE CONTRACTOR SHALL VISIT THE SITE IN ORDER TO VERIFY ALL DIMENSIONS AND EXISTING CONDITIONS AT THE PROJECT. THE CONTRACTOR IS HEREBY NOTIFIED THAT NOT ALL THE EXISTING ELEMENTS MAY HAVE BEEN INDICATED ON THE DRAWINGS AND THAT SOME EXISTING ELEMENTS MAY NOT HAVE BEEN SHOWN IN THEIR ACTUAL LOCATION. THE CONTRACTOR SHALL NOTIFY THE ARCHITECT/ ENGINEER OF ANY DISCREPANCIES BETWEEN THE EXISTING CONDITIONS AND THE CONTRACT DOCUMENTS THAT COULD AFFECT THE PROPER DEMOLITION AND CONSTRUCTION WORK SCHEDULE AND/OR PERFORMANCE.

2.– **NOTIFICATION:**

THE CONTRACTOR SHALL NOTIFY THE OWNER AT LEAST TWO (2) WEEKS PRIOR TO BEGINNING THE DEMOLITION WORK. THE CONTRACTOR SHALL COORDINATE WITH THE ARCHITECT/ENGINEER ALL THE ELEMENTS OF THE ELECTRICAL INSTALLATION THAT ARE TO BE REMOVED AND THOSE THAT ARE TO REMAIN. REFER TO ITEM NO. 12.

3.– **COMPLIANCE:**

THE CONTRACTOR MUST COMPLY WITH ALL THE CODES, STANDARDS AND REGULATIONS THAT APPLY TO DEMOLITION WORK AS WELL AS WITH THE REQUIREMENTS OF ALL THE INSURANCE COMPANIES THAT PROVIDE COVERAGE FOR THIS PROJECT.

4.– **SCHEDULING:**

THE CONTRACTOR SHALL SCHEDULE ALL DEMOLITION WORK IN A CAREFUL MANNER SO AS NOT TO INTERFERE WITH NORMAL DAILY OPERATIONS AND WITH ALL THE NECESSARY COORDINATION FOR ANY ONGOING WORK AT THE PROJECT AND AT ANY AREAS IN PRESENT USE. IN ADDITION, THE DEMOLITION WORK SHALL ALSO BE COORDINATED WITH ALL THE NEIGHBORS AND THE PUBLIC GIVING THEM ALL THE NECESSARY CONSIDERATIONS FOR THE SAFE USE OF THEIR PROPERTIES AND PUBLIC AREAS.

5.– **SAFETY:**

THE CONTRACTOR SHALL ERECT ALL THE NECESSARY SECURITY BARRIERS, FENCES, GUARD RAILS, ETC. IN ORDER TO PROVIDE THE REQUIRED LEVEL OF PROTECTION TO THE PUBLIC AND ALL PERSONNEL AT THE PROJECT SITE. THE CONTRACTOR SHALL AVOID ANY INTERFERENCE WITH THE USE OF ADJACENT BUILDINGS AND FACILITIES AS WELL AS AVOIDING RESTRICTING THE PASSAGE TO AND FROM SAID BUILDINGS AND FACILITIES. DO NOT CLOSE OR OBSTRUCT ANY STREETS OR SIDEWALKS WITHOUT PREVIOUSLY OBTAINING THE REQUIRED PERMISSION FROM ALL THE AUTHORITHIES HAVING JURISDICTION.

6.– **PROTECTION:**

THE CONTRACTOR SHALL USE ALL THE MEANS NECESSARY TO PROTECT ALL THE CONSTRUCTION MATERIALS BEFORE, DURING AND AFTER THE DEMOLITION WORK AS WELL AS ALSO PROTECTING ALL THE ELEMENTS OR THE ELECTRICAL INSTALLATION THAT ARE TO REMAIN. IN THE EVENT OF ANY DAMAGE, THE CONTRACTOR SHALL IMMEDIATELY MAKE ALL THE NECESSARY REPAIRS AND REPLACEMENTS IN ORDER TO RESTORE ALL THE DAMAGED ITEMS TO THEIR ORIGINAL CONDITIONS. ALL OF THIS WORK SHALL BE SUBJECT TO THE APPROVAL OF THE ARCHITECT/ENGINEER. THIS SHALL BE DONE AT NO ADDITIONAL COST TO THE OWNER.

7.– **DUST CONTROL:**

THE CONTRACTOR SHALL USE ALL THE NECESSARY MEANS TO CONTROL DUST ON AND NEAR THE WORK BEING CARRIED OUT. ALL SURFACES SHALL BE THOROUGHLY MOISTEN AS REQUIRED BY THE ENVIRONMENTAL QUALITY BOARD (EQB) AND THE JUNTA DE CALIDAD AMBIENTAL (JCA) IN ORDER TO PREVENT DUST FROM BECOMING A NUISANCE TO ANY BUILDING OCCUPANTS, THE PUBLIC, THE NEIGHBORS AND THE CONSTRUCTION CREW. COVER ALL EQUIPMENT AND MATERIALS AS REQUIRED IN ORDER TO PROTECT THEM FROM DUST AND DEBRIS. THE CONTRACTOR SHALL ALSO USE ALL THE NECESSARY MEANS IN ORDER TO AVOID ANY TYPE OF FLOODING THAT CAN INTERFERE WITH THE CONSTRUCTION OF THE PROJECT, THE NEIGHBORS AND THE PUBLIC.

8.– **BURNING:**

ON-SITE BURNING WILL NOT BE PERMITTED. THE USE OF EXPLOSIVES IS STRICTLY PROHIBITED.

9.– **DISPOSAL:**

THE CONTRACTOR SHALL COORDINATE WITH THE ARCHITECT/ENGINEER A LOCATION WITHIN THE LIMITS OF THE PROJECT IN WHICH TO STORE ALL THE ELEMENTS OF THE EXISTING ELECTRICAL INSTALLATION WHICH ARE INDICATED TO BE REMOVED. THE CONTRACTOR SHALL ALSO COORDINATE WITH THE OWNER OR THE APPOINTED OWNER'S REPRESENTATIVE WHICH OF SAID ELEMENTS SHALL BE TURNED OVER TO THE OWNER OR ARE TO BE DISCARDED. THOSE ELEMENTS CHOSEN TO BE RETAINED SHALL BE CLEANED AND TURNED OVER TO THE OWNER IN GOOD CONDITIONS AT THE SITE STORE LOCATION INDICATED ABOVE. NO LATER THAN EACH FRIDAY OF THE SAME WEEK THE CONTRACTOR SHALL REMOVE FROM THE SITE ALL THE MATERIALS THAT ARE TO BE DISCARDED AS WELL AS ALL THE RELATED DEBRIS. DURING THE WEEKENDS THE SITE MUST BE FREE FROM MATERIALS AND DEBRIS. THE CONTRACTOR SHALL DISPOSE LEGALLY OF SAID MATERIALS AND DEBRIS.

10.– **UTILITIES:**

THE CONTRACTOR SHALL LOCATE AL THE EXISTING POWER (FEEDERS, BRANCH CIRCUITS, CONTROL CIRCUITS, ETC.) AND TELECOMMUNICATION LINES WHICH ARE NECESSARY TO PERFORM THE WORK. THE CONTRACTOR SHALL COORDINATE WITH THE ENGINEERING DEPARTMENT OF THE VETERANS ADMINISTRATION TO MAKE SURE THAT ALL THE LINES ARE DE-ENERGIZED BEFORE PROCEEDING WITH THE REMOVAL OR RELOCATION OF SAID LINES AND ALSO TO PREVENT THE INTERRUPTION OF ANY SERVICE TO AREAS OUTSIDE OF THE LIMITS OF THE PROJECT. THE CONTRACTOR SHALL PROVIDE (FURNISH AND INSTALL) ALL THE NECESSARY LABOR AND MATERIALS, INCLUDING TEMPORARY POWER AND TELECOMMUNICATION LINES TO PREVENT SUCH INTERRUPTIONS.

11.– **SPECIAL CONDITIONS:**

IF THE PROJECT SITE AND BUILDING IS FOUND TO BE PLAGUED WITH TERMITE AND RODENT INFESTATION, COORDINATE WORK WITH THE ACTIVITIES OF THE OWNER'S EXTERMINATOR FOR EXTERMINATING WORK TO BE PERFORMED PRIOR TO DEMOLITION. IN ADDITION, IF ANY ENVIRONMENTAL HAZARD IS FOUND WITHIN THE PROJECT, NOTIFY IMMEDIATELY THE OWNER OR THE APPOINTED OWNER'S REPRESENTATIVE FOR PROPER ACTION AND/OR INSTRUCTIONS.

12.– **SCOPE OF WORK:**

a.– THE SCOPE OF WORK INCLUDES THE FURNISHING OF ALL MATERIALS, EQUIPMENT, CUTTING, EXTENDING, CONNECTING, REPAIRING, ADAPTING AND ANY OTHER WORK COINCIDENTAL HERETO. IT ALSO INCLUDES ALL THE NECESSARY TEMPORARY INSTALLATIONS TO SATISFY THE DEMOLITION PROGRAM. APPROVAL SHALL BE SECURED FROM THE ARCHITECT/ENGINEER PRIOR TO CUTTING/DRILLING ANY STRUCTURAL SUPPORT.

b.– ALL BUILDING CONSTRUCTION DESIGNATED TO REMAIN AND AFFECTED BY THE REMOVAL, RELOCATION OR INSTALLATION OF ANY PIECE OF EQUIPMENT SHALL BE REPAIRED AND FINISHED TO MATCH EXISTING CONDITIONS. IN ADDITION, WHERE OPENINGS ARE LEFT DUE TO THE REMOVAL OF DUCTS, PIPES, CONDUITS, EQUIPMENT AND APPARATUS, SAID OPENINGS SHALL BE REPAIRED OR CLOSED UP TO CORRESPOND IN MATERIAL, QUALITY, SHAPE AND FINISH WITH THAT OF SIMILAR AND ADJOINING WORK. UNLESS OTHERWISE CALLED FOR WHERE DAMAGED IS UN-REPAIRABLE, NEW ITEMS OR EQUIPMENT SHALL BE PROVIDED. CONTRACTOR SHALL PROVIDE ALL THE NECESSARY WATERPROOFING, FIRE STOPPING AND SEALING OF PENETRATIONS LEFT FROM REMOVED EQUIPMENT OR PRODUCED BY THIS WORK.

c.– BEFORE PROCEEDING WITH ANY ELECTRICAL DEMOLITION WORK, THE CONTRACTOR SHALL COMPLETELY AND FULLY DE-ENERGIZE OR COORDINATE THE DE-ENERGIZING OF THE EXISTING ELECTRICAL INSTALLATION. BOTH POWER AND TELECOMMUNICATIONS, TO BE REMOVED. A CERTIFICATION TO THIS EFFECT SHALL BE FURNISHED BY THE CONTRACTOR TO THE OWNER OR THE APPOINTED OWNER'S REPRESENTATIVE.

d.– REMOVE ALL THE EXISTING ELECTRICAL EQUIPMENT, WIRING DEVICES, COVER PLATES AND LIGHTING FIXTURES AS INDICATED ON THE DRAWINGS. THE ELECTRICAL EQUIPMENT SHALL INCLUDE BUT NOT LIMITED TO LOAD CENTERS, PANELBOARDS, DISCONNECT SWITCHES, STARTERS, MOTOR CONTROL CENTERS, SWITCHBOARDS, TRANSFORMERS, TRANSFER SWITCHES, EMERGENCY GENERATORS AND SUBSTATIONS.

e.– REMOVE ALL THE EXISTING BRANCH CIRCUIT WIRING AND FEEDERS WHICH FORM PART OF THE ELECTRICAL INSTALLATION INDICATED TO BE REMOVED.

f.– REMOVE ALL THE EXISTING EXPOSED CONDUITS RELATED TO THE ELECTRICAL DEMOLITION INDICATED ABOVE. ALL THE EXISTING CONDUITS WHICH ARE EMBEDDED IN CONCRETE WALLS, FLOORS AND CEILINGS OR IN CONCRETE BLOCK WALLS SHALL BE ABANDONED AND THEIR RELATED ELECTRICAL BOXES SHALL BE FILLED WITH CONCRETE AND PLASTERED OVER TO MATCH THE ADJOINING FINAL SURFACE CONDITIONS. REMOVE ALL THE EXISTING CONDUITS LOCATED ABOVE HUNG CEILINGS, IN FURRING WALLS AND/OR COLUMNS AND BELOW RAISED FLOORS. REMOVE ALL THEIR RELATED ELECTRICAL BOXES. THE EXISTING CONDUITS CAN ONLY BE REMOVED OR ABANDONED AFTER THEIR CORRESPONDING CONDUCTORS ARE REMOVED AND THE CONDUITS ARE EMPTY.

g.– REMOVE ALL THE EXISTING UNDERGROUND PULL BOXES, JUNCTION BOXES, AND SPLICING BOXES INDICATED TO BE REMOVED. REMOVE ALL THE EXISTING POLE BASES BELONGING TO THE POLES INDICATED TO BE REMOVED. THE OPENINGS LEFT AFTER THEIR REMOVAL SHALL BE FILLED WITH COMPACTED EARTH AND THE GROUND SURFACE SHALL BE FINISHED TO MATCH THOSE OF THE FINAL ADJOINING AREAS.

h.– MAINTAIN AND RESTORE, IF INTERRUPTED, ALL THE BRANCH CIRCUITS WIRING, FEEDERS AND TELE-COMMUNICATION LINES PASSING THROUGH RENOVATED AREAS AND SERVICING UNDISTURBED AREAS.

(2) GENERAL NOTES:

1 – UNLESS OTHERWISE INDICATED ALL CONDUCTORS SHALL BE #12-AWG. UP TO #10-AWG USE SOLID CONDUCTORS, ALL LARGER SIZES SHALL BE STRANDED CONDUCTORS. CONTROL CONDUCTORS TO BE #14 AWG. MINIMUM SIZE.

2 – ALL CONDUCTORS SHALL BE THWN/THHN-600V. INSULATION.

3 – UNLESS OTHERWISE INDICATED ALL CONDUCTORS SHALL BE COPPER.

4 – PROVIDE GROUND CONDUCTOR IN ALL THE CONDUITS.

5 – PROVIDE #12-AWG GREEN JUMPER BETWEEN RECEPTACLE GROUNDING SCREW AND OUTLET BOX GROUNDING SCREW.

6 – UNLESS OTHERWISE INDICATED ALL CONDUITS SHALL BE 3/4" IN DIAMETER MINIMUM.

7 – ALL UNDERGROUND CONDUIT COUPLING SHALL BE WATERTIGHT.

8 – PROVIDE AN EXPANSION JOINT COUPLING OF THE REQUIRED TYPE AND SIZE WHENEVER A CONDUIT CROSSES AN EXPANSION JOINT.

9 – PROVIDE PLASTIC CONDUIT DIVIDERS IN ALL UNDERGROUND CONDUIT RUNS. MAXIMUM DISTANCE BETWEEN DIVIDERS TO BE 4'-0'.

10 – CONTRACTOR MUST MAKE SURE THAT THE ENTIRE ELECTRICAL SYSTEM HAS GROUND CONTINUITY.

11 – ALL THE ELECTRICAL INSTALLATION SHALL BE DONE IN A NEAT & WORKMANLIKE MANNER, ACCORDING TO THE LAST EDITION OF THE NATIONAL ELECTRICAL CODE, THE LUMA ENERGY LATEST STANDARDS & THE NEGOCIADO DE TELECOMUNICACIONES LATEST PRACTICES.

12 – THE CONTRACTOR SHALL VISIT THE JOB SITE AND BECOME ACQUAINTED WITH THE EXISTING FIELD CONDITIONS. IT SHALL BE THE DIRECT RESPONSIBILITY OF THE CONTRACTOR TO BRING PROMPTLY TO THE ATTENTION OF THE ENGINEER ANY DISCREPANCIES BETWEEN THE EXISTING FIELD CONDITIONS AND THOSE THAT WERE USED FOR DESIGN PURPOSES. THIS SHALL BE DONE BEFORE THE CONTRACTOR SUBMITS HIS BID, SO THAT THE ENGINEER CAN RENDER A DECISION ON THE MATTER BEFORE THE BIDS ARE RECEIVED. THE SUBMITTAL OF THE BID BY THE CONTRACTOR WILL BE HELD AS PROOF THAT THE CONTRACTOR UNDERSTAND THROUGHLY AND COMPLETELY THE SCOPE OF THE WORK INVOLVED, HAS FAMILIARIZED HIMSELF WITH THE EXISTING FIELD CONDITIONS, AND HAS INCLUDED IN HIS BID ALL THE ITEMS NECESSARY TO PERFORM THE ELECTRICAL WORK. NO ALLOWANCE WILL BE PERMITTED ON THIS MATTER AFTER THE BIDS ARE RECEIVED.

13 – UNLESS OTHERWISE INDICATED ALL OUTLETS SHALL BE FLUSH MOUNTED AND SHALL HAVE THEIR OWN INDEPENDENT OUTLET BOXES. MINIMUM SIZE OF OUTLET BOX TO BE 4" SQUARE & 1-1/2" DEEP. EXACT SIZE OF OUTLET BOX SHALL BE DETERMINED ACCORDING TO THE MAXIMUM NUMBER OF CONDUCTORS IN THE BOX PER N.E.C. ARTICLE 370-SECTION 6.

14 – ALL INDICATED HEIGHTS ARE FROM CENTER OF BOX TO FINISHED FLOOR.

15 – CONTRACTOR SHALL BALANCE ALL LOADS.

16 – ROUTE OF CONDUITS SHOWN IN THE LAYOUT IS SCHEMATIC AND INTENDED ONLY TO INDICATE INTER-CONNECTIONS BETWEEN OUTLETS. EXACT CONDUIT ROUTING SHALL BE DETERMINED AT THE JOB SITE TO CONFORM WITH THE STRUCTURAL CONDITIONS AND SHALL BE SUBJECT TO THE FINAL APPROVAL OF THE ARCHITECT/ENGINEER.

17 – LEAVE A #12-AWG-TW FISHWIRE IN ALL EMPTY CONDUITS.

18 – ALL PANELBOARDS AND LOAD CENTERS SHALL BE PROVIDED WITH A FACTORY INSTALLED GROUND BUS FOR CONNECTING TO GROUND ALL THE GROUND WIRES OR CABLES ENTERING OR LEAVING THE PANELBOARD. THE GROUND BUS SHALL BE SIMILAR IN SIZE AND CHARACTERISTICS TO THE NEUTRAL BUS. ALL PANELBOARDS SHALL HAVE A MONOFLAT FRONT AND KEY LOCK.

19 – WHEN TWO OR MORE WIRING DEVICES ARE SHOWN TOGETHER IN ADJACENT POSITIONS AND AT THE SAME HEIGHT, THEY SHALL BE INSTALLED IN A MULTIPLE GANG OUTLET BOX OF THE PROPER SIZE SO THAT ONLY ONE RAISED COVER PLATE OF THE REQUIRED TYPE AND SIZE ARE USED.

20 – UNLESS OTHERWISE INDICATED, ALL WIRING DEVICES SHALL BE WHITE COLORED WITH 302 STAINLESS STEEL COVER PLATES, EXCEPT THE WEATHERPROOF OUTLETS WHICH SHALL HAVE THEIR STANDARD GRAY COVER PLATES.

21 – WHEN TWO OR MORE PANELBOARDS OR CABINETS ARE SHOWN TOGETHER IN ADJACENT LOCATIONS, THE TOP OF ALL PANELBOARDS OR CABINETS SHALL BE ALIGNED WITH THE TOP OF THE BIGGEST ONE SO THAT ALL THE TOPS ARE AT EXACTLY THE SAME HEIGHT FROM THE FINISHED FLOOR.

22 – IN CONDUIT RUNS, THE NUMBER OF ARROWS DESIGNATE THE NUMBER OF CIRCUITS IN THE CONDUIT (ONE POLE IN THE PANELBOARD PER EACH CIRCUIT), THE NUMBER OF LINES DESIGNATE THE NUMBER OF CONDUCTORS IN THE CONDUIT , THE LONGER LINE BEING A NEUTRAL CONDUCTOR AND " / " BEING THE GROUND CONDUCTOR.

23 – CI ◯ IN LIGHTING OUTLET, C1 INDICATES THE CIRCUIT NUMBER, L1 INDICATES THE LUMINARY L1 TYPE FROM THE LUMINARY SCHEDULE AND 1 INDICATES THE SWITCH CONTROLLING UNIT.
1
C3 IN RECEPTACLE OUTLET, C3 INDICATES THE CIRCUIT NUMBER.

24 – TELEPHONE TERMINALS CABINET SHALL BE APPROVED EQUAL TO COLUMBIA METAL TYPE "PF" WITH THE DOOR HINGES, LOCK AND 3/4" PLYWOOD BACKBOARD COVER AT THE BOTTOM OF THE CABINET.

25 – IT SHALL BE THE RESPONSIBILITY OF THE CONTRACTOR TO VERIFY THE VOLTAGE CHARACTERISTICS AT THE SITE WITH THE UTILITY COMPANY AT THE TIME OF INSTALLATION BEFORE ORDERING ANY PRIMARY EQUIPMENT.

26 – ALL WIRING DEVICES SHALL BE SPECIFICATION GRADE.

27 – ALL THE SELF-STANDING AND SURFACE MOUNTED ELECTRICAL EQUIPMENT AS WELL AS THE LUMINARIES SHALL ALL BE BRACED FOR SEISMIC SHOCK ACCORDING TO THE SEISMIC RESTRAINT MANUAL GUIDELINES FOR MECHANICAL SYSTEMS. THE SAME APPLIES TO ALL THE CONDUIT WORK. THE DETAILS AND INSTALLATION METHODS IN SAID MANUAL SHALL BE MODIFIED AS REQUIRED TO FIT THE ELECTRICAL INSTALLATION OF THE PROJECT.

28 – FOR FINAL LOCATION OF MECHANICAL EQUIPMENT SEE CORRESPONDING MECHANICAL AND ARCHITECTURAL DRAWINGS. CONTRACTOR TO RELOCATE ELECTRICAL ROUGH-IN ACCORDINGLY AT NO ADDITIONAL COST TO OWNER.

29 – CONDUIT WORK:

A – ALL CONDUITS INSTALLED UNDERGROUND SHALL BE PVC SCH. 40.

B – ALL CONDUITS INSTALLED EMBEDED IN FLOOR SLABS WHICH ARE IN DIRECT CONTACT WITH THE EARTH SHALL BE PVC SCH. 40.

C – ALL CONDUITS INSTALLED EMBEDED IN WALLS, CEILING SLABS AND IN FLOOR SLABS WHICH ARE NOT IN DIRECT CONTACT WITH THE EARTH SHALL BE EMT.

D – ALL CONDUITS INSTALLED IN THE AREA BETWEEN HUNG CEILINGS AND CEILING SLABS OR METAL DECKS SHALL BE EMT.

E – ALL CONDUITS INSTALLED EXPOSED IN INDOOR AREAS SHALL BE EMT.

F – ALL CONDUITS INSTALLED EXPOSED IN OUTDOOR AREAS SHALL BE PVC COATED HEAVY WALL RIGID GALVANIZED STEEL.

G – FINAL CONNECTIONS TO ALL MOTORS AND ELECTRICAL EQUIPMENT SHALL BE DONE WITH LIQUIDTIGHT FLEXIBLE STEEL CONDUIT.

H – 'ENT' CONDUIT IS NOT ALLOWED IN THIS PROJECT.

30 – ALL CONDUCTORS SHALL BE #12-AWG, EXCEPT WHEN OTHERWISE INDICATED IN THE DRAWINGS OR AS INDICATED BELOW FOR 20 AMPS. CKTS. CONDUCTOR SIZING.

1 – ALL 20 AMP. 120VOLT CIRCUIT RUNS SHALL BE AS FOLLOWS:
5' TO 100' IN LENGTH, #12-AWG.
100' TO 200' IN LENGTH, #10-AWG.
200' TO 300' IN LENGTH, #8-AWG.
300' TO 400' IN LENGTH, #6-AWG.

31 – ALL PENDANT MOUNTED LUMINARIES SHALL BE INSTALLED USING STEMS, 2 STEMS PER EACH 4' LUMINARY. STEMS SHALL BE PAINTED OF THE COLOR REQUIRED BY THE ARCHITECT.

32 – ALL DIMMERS SHALL BE OF THE SLIDE TYPE.

33 – THE ELECTRICAL CONTRACTOR SHALL PROVIDE ALL THE POWER AND CONTROL INTERCONNECTIONS AMONG ALL THE DIFFERENT PARTS OF THE AIR CONDITIONING SYSTEMS (FAN COILS/AHU'S, CONDENSING UNITS, THERMOSTATS, ETC.). THE CONTRACTOR SHALL ALSO PROVIDE ALL THE STARTING AND DISCONNECT EQUIPMENT FOR SAID SYSTEMS.

34 – ALL 15A OR 20A/1P-125V. RECEPTACLES LOCATED OUTDOORS SHALL BE PROVIDED WITH INTEGRAL GROUND FAULT PROTECTION AND WEATHERPROOF COVER PLATES.

35 – ALL THE SMOKE DETECTORS SHALL BE INTERCONNECTED SO THAT IF ONE SMOKE DETECTOR IS ACTIVATED ALL THE SMOKE DETECTORS WILL SOUND THE ALARM.

36 – ALL FLOOR OUTLETS SHALL BE PROVIDED WITH PVC FLOOR BOXES AND GASKETED FLUSH BRONZE COVER PLATES.

(3) LEGEND

CEILING LIGHTING OUTLET.

SURFACE MOUNTED LED LUMINARY.

SURFACE MOUNTED EMERGENCY EXIT LUMINARY.

WALL MOUNTED EMERGENCY LUMINARY, 7'-0" A.F.F. UNLESS OTHERWISE INDICATED IN THE DRAWINGS.

SINGLE POLE SWITCH, 20 AMPS, 125/277 VOLTS, 48" A.F.F.

DUPLEX GROUNDING POWER OUTLET, 20 AMPS, 125 VOLTS, 1'-6" A.F.F.

PANELBOARD, CENTER LINE AT 5'-0" A.F.F. SEE ELECTRICAL DRAWINGS FOR DETAILS.

MOTOR (HP).

(E) EXHAUST FAN OUTLET, SEE MECHANICAL AND ARCHITECTURAL DRAWINGS FOR EXACT LOCATION.

WP WEATHERPROOF COVER PLATE TO BE PROVIDED IN ALL OUTLETS THIS SYMBOL IS SHOWN ADJACENT TO.

GF INTEGRAL GROUND FAULT PROTECTION TO BE PROVIDED IN ALL RECEPTACLES THIS SYMBOL IS SHOWN ADJACENT TO.

CONDUIT INSTALLED IN THE CEILING SLAB.

CONDUIT INSTALLED BETWEEN THE HUNG CEILING AND THE CEILING SLAB.

CONDUIT INSTALLED IN THE FLOOR SLAB.

CONDUIT INSTALLED IN WALL.

—X— CONDUIT INSTALLED EXPOSED.

CONDUIT INSTALLED UNDERGROUND.

(4) PANELBOARD SCHEDULE

PANELBOARD DESIGNATION : PA

120/240 VOLTS 1 PH. 3 WIRES ● SOLID NEUTRAL 225 AMPERES BUS BARS 22000 AMPS. SYM. INT. CAP.
MAINS: -- AMPS. MAIN LUGS, 200 AMPS. MAIN CIRCUIT BREAKER 2 POLES 250 VOLTS, GRND. BAR ●
MOUNTING: ● FLUSH -- SURFACE, FED FROM: -- TOP ● BOTTOM, LOCATION: ELECTRICAL ROOM
NEMA TYPE: I MANUFACTURER: SQUARE D - NQ

CKT NO.	DESCRIPTION	AMPS	* A	B	AMPS	DESCRIPTION	CKT No.
1	EMERGENCY EXIT LIGHTS	1	4		3	ELECTRICAL ROOM RECEPTACLES	2
3	ELEC. & MECH. ROOM LIGHTS	2		4	2	MECHANICAL ROOM RECEPTACLES	4
5	EXTERIOR BUILDING LIGHTS	2	5		3	COVERED AREA RECEPTACLES	6
7	EXTERIOR BUILDING LIGHTS	3		6	3	STORAGE RECEPTACLES	8
9	STORAGE & KITCHEN LIGHTS	2	60		58	FOUNTAIN CONTROL PANEL	10
11	SCULPTURE PERIMETER POLE LIGHTS	3		61	58		12
13		3	3		.	CENTRAL AREA POLE LTS.	14
15	PERIPHERY PLAZA LIGHTING	4		4	.		16
17		4	8		4	SCULPTURE LTG.	18
19	PERIPHERY PLAZA LIGHTING	4		6	2	STATUE LTG.	20
21		4	8		4	UNDER BENCH CONTINUOUS ACCENT LTG.	22
23	SIDEWALK LIGHTING	6		6	.	SPARE	24
25		6	6		.	SPARE	26
27	SIDEWALK LIGHTING	6		6	.	SPARE	28
29		6	6		.	SPACE	30
31	FOUNTAIN LIGHTS	6		6	.	SPACE	32
33	SPACE	.	.		.	SPACE	34
35	SPACE	.		.	.	SPACE	36
37	SPACE	.	.		.	SPACE	38
39	SPACE	.		.	.	SPACE	40
41	SPACE	.	.		.	SPACE	42

100 | 99
AMPS. SUB TOTALS

SPECIAL FEATURES:
--- COLUMN WIDTH TYPE PANEL
--- TWO SECTIONS PANEL
FEED-THRU TYPE PANEL
LIGHTING CONTACTOR PANEL
● MONOFLAT FRONT
● EXTRA WIDE GUTTERS
SPLIT BUS
● COPPER BUS BARS

NOTES:
1-ALL BREAKERS TO BE 20A, UNLESS OTHERWISE NOTED.
2-PROVIDE WITH HINGED DOOR & DOOR LOCK WITH KEY.
3-

STD. NO. : LJVPS-2

SPECIAL FEATURES:
ISOLATED GROUND BAR
* LOCK-ON DEVICE
▲ GROUND FAULT TYPE BREAKER
● "BOLT-ON" TYPE BREAKERS
OUTDOOR CONSTRUCTION
STAINLESS STEEL CONSTRUCTION
● DOOR-IN-DOOR FRONT

1 E-4 SECTION
NOT TO SCALE

REVITALIZATION OF LUIS MUÑOZ RIVERA PLAZA IN THE URBAN CENTER
ARECIBO, PUERTO RICO

IGLESIAS●VAZQUEZ and ASSOCIATES
320 FORTALEZA STREET 2nd FLOOR SAN JUAN, PUERTO RICO 00902 TELS. 721-4545 721-4546
ENGINEERS · ARCHITECTS · PLANNERS

The Office of LEONARDO J. VIDAL
Consulting Engineers
Lic. no. 6092
P.O. Box 363164, San Juan. P.R. 00936-3164
Tels.: (787) 765-5631, Fax.: (787) 765-7399
Email: oficinaljv@gmail.com

LJV DRAWING HISTORY			LJV-DSB DESIGN STAGE	
PROJECT NO:	23-059		SCHEMATIC DWGS: (SD)	
DRAWING NO:	E-4		PRELIMINARY DWGS: (PD)	
CAD FILE:	23-059/		DESIGN DEVELOPMENT DWGS: (DD)	
CAD SUBFILE:	23-059-E004	-R00-BD	ADVANCED DWGS: (AD)	
PLOT DATE:	06.10.24		BID DWGS: (BD)	●
PLOT SCALE:	1:1		CONTRACT DWGS: (CD)	
ISSUE DATE:	06.10.24		RECORD DWGS: (RD)	
REMARKS:	NOT FOR CONSTRUCTION		-	%
RELATED PROJECTS:	------------------------------			

DATE	REVISIONS

SHEET TITLE:
NOTES, LEGEND & DETAIL
SCALE: AS SHOWN

CODE NO:
08-903-

DRAWING NO:
E-4

SHEET NO:
OF
00

J:\2023\23-059 Plaza Publica Arecibo\00 Elec 2024-02-07\23-059-E004 schedules.dwg

① LUMINARY SCHEDULE

DESIGNATION	LIGHT SOURCE TYPE	DESCRIPTION	MOUNTING	VOLTS	DRIVER	LED					TOTAL WATTS	MANUFACTURER	CATALOG NO.	REMARKS NO.
						CRI	°K	WATTS	LUMENS	EFFICIENCY				
L1	LED	WRAPAROUND	CEILING	120	ELEC.	70	4000	43.8	4424	101	43.8	METALUX	4WSNLED-LD4-44SL-F-UNV-L840-CD-I-U	1,2
L2	LED	CANOPY LTG. FIXTURE	CEILING	120	ELEC.	70	4000	56	7320	129.11	56	LUMARK	CLCS-55-SM-UNV	1
L3	LED	INDUSTRIAL	CEILING	120	ELEC.	70	4000	33.5	3484	104	33.5	FAIL SAFE	HVSL4-4-LD4-I-STD-40-UNV-0-EDC1	3
L4	LED	COMBINATION EXIT/EMERG.	CEILING	120	ELEC.	--	---	1	---	---	1	AMERICAN LITE	LEDCXTEU-2-R-W-STD	
L5	LED	EMERGENCY	WALL	120	ELEC.	--	---	1.2	205	---	1.2	AMERICAN LITE	LEDR5-120V-W-STD	
L6	LED	LINEAR LIGHT STRIP	UNDER BENCH	120	ELEC.	80	3000	4.2W/FT	113LM/FT	109	114	DURAFLEX	DFA-SB-42-0-30-24	4
FL1	LED	FLOODLIGHT	SURFACE	120	ELEC.	80	4000	100	12483	124.8	100	TARGETTI	KPLM-41-HE-SP-L2-40-1E2525-1DU2521-1DU2530-1T1711-1E2523	
FL2	LED	FLOODLIGHT	SURFACE	120	ELEC.	80	4000	14	1419	14	101	TARGETTI	KPLM-41-HE-FL-L2-30-1E2525-1DU2521-1DU2530-1T1711-1E2523	
UW-1	LED	UNDERGROUND	INGROUND	120	ELEC.	80	3000	14	1420	101	14	TARGETTI KEPLERD	KEPLERD MINI-41-HE-FL-12-30	

② LUMINARY SCHEDULE REMARKS

VALS-1

NO.	DESCRIPTION
1	SURFACE MOUNT
2	DIMMING DRIVER
3	VANDAL RESISTANT, MATE WHITE FINISH
4	4.2W/FT

③ TIME SWITCHES SCHEDULE

VATSS 1

DESIGNATION	VOLTS	POLES	AMPS/POLE	NEMA TYPE	MOUNTING	BATTERY BACK-UP	DAY-OMITTING DEVICE	ON	OFF	MANUFACTURER	CATALOG NUMBER	REMARKS	CONTROL CIRCUITS		
													PANEL DESIGNATION	CIRCUITS NUMBER	LOCATION
TS-1	120	3PST	40	1	SURFACE	●	●	AS REQUIRED BY OWNER		TORK	7300ZL	CONTROLS LIGHTING CONTACTOR LC1	PA	A15/17	PERIMETER AREA LTG.
TS-2	120	3PST	40	1	SURFACE	●	●			TORK	7300ZL	CONTROLS LIGHTING CONTACTOR LC2	PA	A19/21	PERIMETER AREA LTG.
TS-3	120	3PST	40	1	SURFACE	●	●			TORK	7300ZL	CONTROLS LIGHTING CONTACTOR LC3	PA	A11/13	CENTRAL AREA LTG.
.						●	●								
.						●	●								

④ LIGHTING CONTACTORS SCHEDULE

VALCS-1

DESIGNATION	VOLTS	POLES			AMPS/POLE	NEMA TYPE	HOLDING		CONTROL TRANSF.	CONTROL DEVICE				MANUFACTURER	CATALOG NO.	REMARKS NO.	LOCATION	CONTROLLED LOADS	
		ACTIVE	SPARE	TOTAL			ELEC.	MECH.		HAND-OFF-AUTO SELECTOR SWITCH	ON/OFF PUSH-BUTTON	OTHERS, SEE REMARKS						PANEL DESIGNATION	CIRCUITS NUMBER
LC1	250	6	–	6	30	1	●	–	●	●	--	--		SQUARE D	8903-LG60-V03-C-FF4T-P1	1	ELEC ROOM	PA	A15/17
LC2	250	6	–	6	30	1	●	–	●	●	--	--		SQUARE D	8903-LG60-V03-C-FF4T-P1	2	ELEC ROOM	PA	A19/21
LC3	250	6	–	6	30	1	●	–	●	●	--	--		SQUARE D	8903-LG60-V03-C-FF4T-P1	3	ELEC ROOM	PA	A11/13
.	.	.	.	.	.	.	.	.	.					.	.	.	.	.	.
.	.	.	.	.	.	.	.	.	.					.	.	.	.	.	.

⑤ LIGHTING CONTACTORS SCHEDULE - REMARKS

NUMBER	DESCRIPTION
1	CONTROLS PERIMETER AREA POLE LTS.
2	CONTROLS PERIMETER AREA POLE LTS.
3	CONTROLS CENTRAL AREA POLE LTS.
4	.
5	.
6	.
7	.

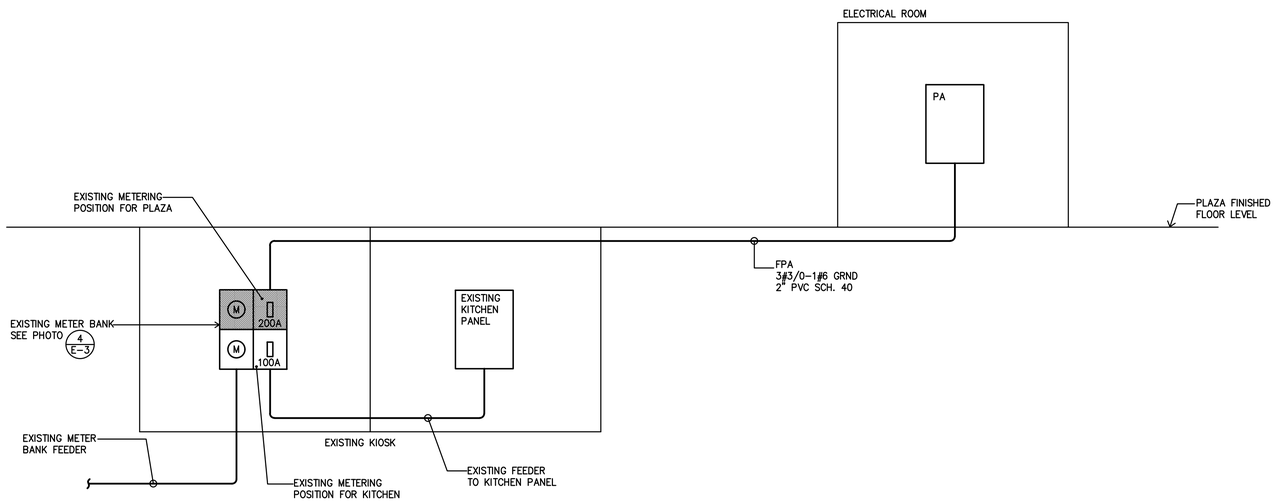

ONE LINE DIAGRAM

NOT TO SCALE

LJV DRAWING HISTORY		LJV-DSB DESIGN STAGE	
PROJECT NO:	23-059	SCHEMATIC DWGS: (SD)	
DRAWING NO:	E-5	PRELIMINARY DWGS: (PD)	
CAD FILE:	23-059/	DESIGN DEVELOPMENT DWGS: (DD)	
CAD SUBFILE:	23-059-E005 -R00-BD	ADVANCED DWGS: (AD)	
PLOT DATE:	06.10.24	BID DWGS: (BD)	●
PLOT SCALE:	1:1	CONTRACT DWGS: (CD)	
ISSUE DATE:	06.10.24	RECORD DWGS: (RD)	
REMARKS:	NOT FOR CONSTRUCTION	–	%
RELATED PROJECTS:	----------		

DATE	REVISIONS

The Office of LEONARDO J. VIDAL Consulting Engineers
P.O. Box 363748, San Juan, P.R. 00936-3748
Tels. (787) 765-3833, Fax. (787) 765-1388
E-mail: vidalleo@gmail.com
Lic. No. 6006

REVITALIZATION OF
LUIS MUÑOZ RIVERA PLAZA
IN THE URBAN CENTER
ARECIBO, PUERTO RICO

IGLESIAS • VAZQUEZ and ASSOCIATES
ENGINEERS • ARCHITECTS • PLANNERS
320 FORTALEZA STREET 2nd FLOOR SAN JUAN, PUERTO RICO 00902 TELS. 721-4545 721-4546

SHEET TITLE: LUMINARY & TIME SWITCHES SCHEDULES
SCALE: AS SHOWN

CODE NO: 08-903-

DRAWING NO: E-5

SHEET NO: OF 00

J:\2023\23-059 Plaza Publica Arecibo\00 Elec 2024-02-07\23-059-E005 schedules.dwg

Appendix C:
Airport Hazards

PR-CRP-000771 Civil Airport Map

Address: Pueblo Ward, Arecibo, PR 00612
Coordinates: 18.471980°, -66.715910°

August 13, 2025

Search Result (point)

Airport Polygons

Airport Points

Source:https://nepassisttool.epa.gov/nepassist/nepamap.aspx

1:288,895

0 2.25 4.5 9 mi

0 3.75 7.5 15 km

Earthstar Geographics, Sources: Esri, TomTom, Garmin, FAO, NOAA, USGS, (c) OpenStreetMap contributors, and the GIS User Community, EPA

PR-CRP-000771 Military Airport Hazards Map

Address: Pueblo Ward, Arecibo, PR 00612
Coordinates: 18.471980°, -66.715910°

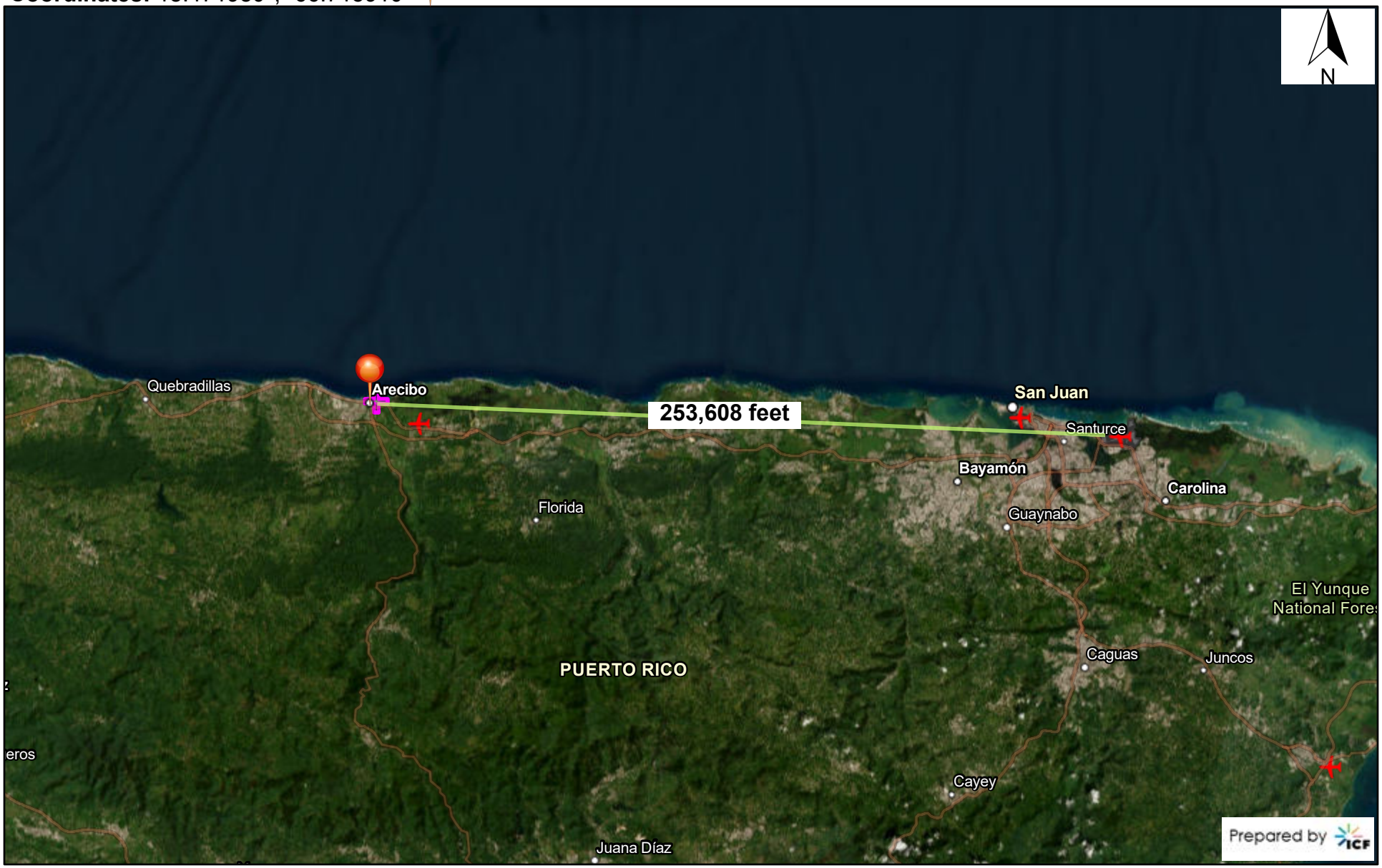

August 1, 2025

Search Result (point) Airport Polygons

Airport Points

1:577,791

0 4.75 9.5 19 mi

0 5 10 20 km

Earthstar Geographics, Sources: Esri, TomTom, Garmin, FAO, NOAA, USGS, (c) OpenStreetMap contributors, and the GIS User Community, EPA

Source: https://nepassisttool.epa.gov/nepassist/nepamap.aspx

Appendix D:
Coastal Barrier Resources

PR-CRP-000771 CBRS Map

Address: Pueblo Ward, Arecibo, PR 00612
Coordinates: 18.471980°, -66.715910°

U.S. Fish and Wildlife Service
Coastal Barrier Resources System

August 1, 2025

CBRS Buffer Zone

CBRS Units

Otherwise Protected Area

System Unit

This map is for general reference only. The Coastal Barrier Resources System (CBRS) boundaries depicted on this map are representations of the controlling CBRS boundaries, which are shown on the official maps, accessible at https://www.fws.gov/library/collections/official-coastal-barrier-resources-system-maps. All CBRS related data should be used in accordance with the layer metadata found on the CBRS Mapper website.

The CBRS Buffer Zone represents the area immediately adjacent to the CBRS boundary where users are advised to contact the Service for an official determination (https://www.fws.gov/service/coastal-barrier-resources-system-property-documentation) as to whether the property or project site is located "in" or "out" of the CBRS.

CBRS Units normally extend seaward out to the 20- or 30-foot bathymetric contour (depending on the location of the unit). The true seaward

Source: https://fwsprimary.wim.usgs.gov/CBRSMapper-v2/

Appendix E:
Flood Insurance

PR-CRP-000771 National Flood Hazard Layer FIRMette

FEMA

66°43'16"W 18°28'36"N

Address: Pueblo Ward, Arecibo, PR 00612
Coordinates: 18.471980°, -66.715910°

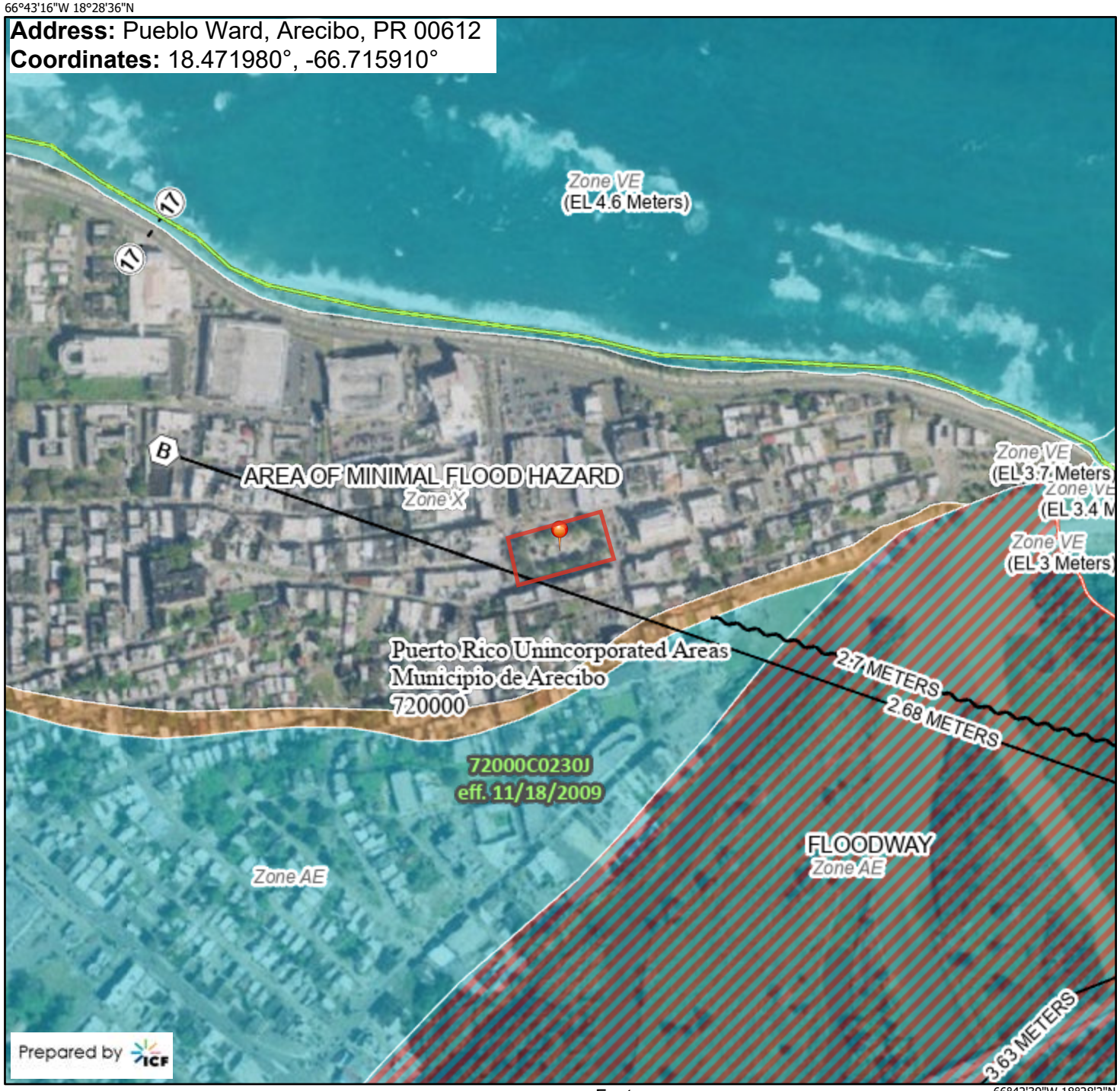

66°42'39"W 18°28'2"N

0 250 500 1,000 1,500 2,000 Feet

1:6,000

Basemap Imagery Source: USGS National Map 2023

Legend

SEE FIS REPORT FOR DETAILED LEGEND AND INDEX MAP FOR FIRM PANEL LAYOUT

SPECIAL FLOOD HAZARD AREAS
- Without Base Flood Elevation (BFE) *Zone A, V, A99*
- With BFE or Depth *Zone AE, AO, AH, VE, AR*
- Regulatory Floodway

OTHER AREAS OF FLOOD HAZARD
- 0.2% Annual Chance Flood Hazard, Areas of 1% annual chance flood with average depth less than one foot or with drainage areas of less than one square mile *Zone X*
- Future Conditions 1% Annual Chance Flood Hazard *Zone X*
- Area with Reduced Flood Risk due to Levee. See Notes. *Zone X*
- Area with Flood Risk due to Levee *Zone D*

OTHER AREAS
- NO SCREEN Area of Minimal Flood Hazard *Zone X*
- Effective LOMRs
- Area of Undetermined Flood Hazard *Zone D*

GENERAL STRUCTURES
- Channel, Culvert, or Storm Sewer
- Levee, Dike, or Floodwall

OTHER FEATURES
- 20.2 Cross Sections with 1% Annual Chance
- 17.5 Water Surface Elevation
- Coastal Transect
- Base Flood Elevation Line (BFE)
- Limit of Study
- Jurisdiction Boundary
- Coastal Transect Baseline
- Profile Baseline
- Hydrographic Feature

MAP PANELS
- Digital Data Available
- No Digital Data Available
- Unmapped

N

The pin displayed on the map is an approximate point selected by the user and does not represent an authoritative property location.

This map complies with FEMA's standards for the use of digital flood maps if it is not void as described below. The basemap shown complies with FEMA's basemap accuracy standards

The flood hazard information is derived directly from the authoritative NFHL web services provided by FEMA. This map was exported on 8/1/2025 at 7:38 PM and does not reflect changes or amendments subsequent to this date and time. The NFHL and effective information may change or become superseded by new data over time.

This map image is void if the one or more of the following map elements do not appear: basemap imagery, flood zone labels, legend, scale bar, map creation date, community identifiers, FIRM panel number, and FIRM effective date. Map images for unmapped and unmodernized areas cannot be used for regulatory purposes.

Source: https://hazards-fema.maps.arcgis.com/apps/webappviewer/index.html?id=8b0adb51996444d4879338b5529aa9cd&extent

Appendix F:
Clean Air

PR-CRP-000771 Clean Air Map

Address: Pueblo Ward, Arecibo, PR 00612
Coordinates: 18.471980°, -66.715910°

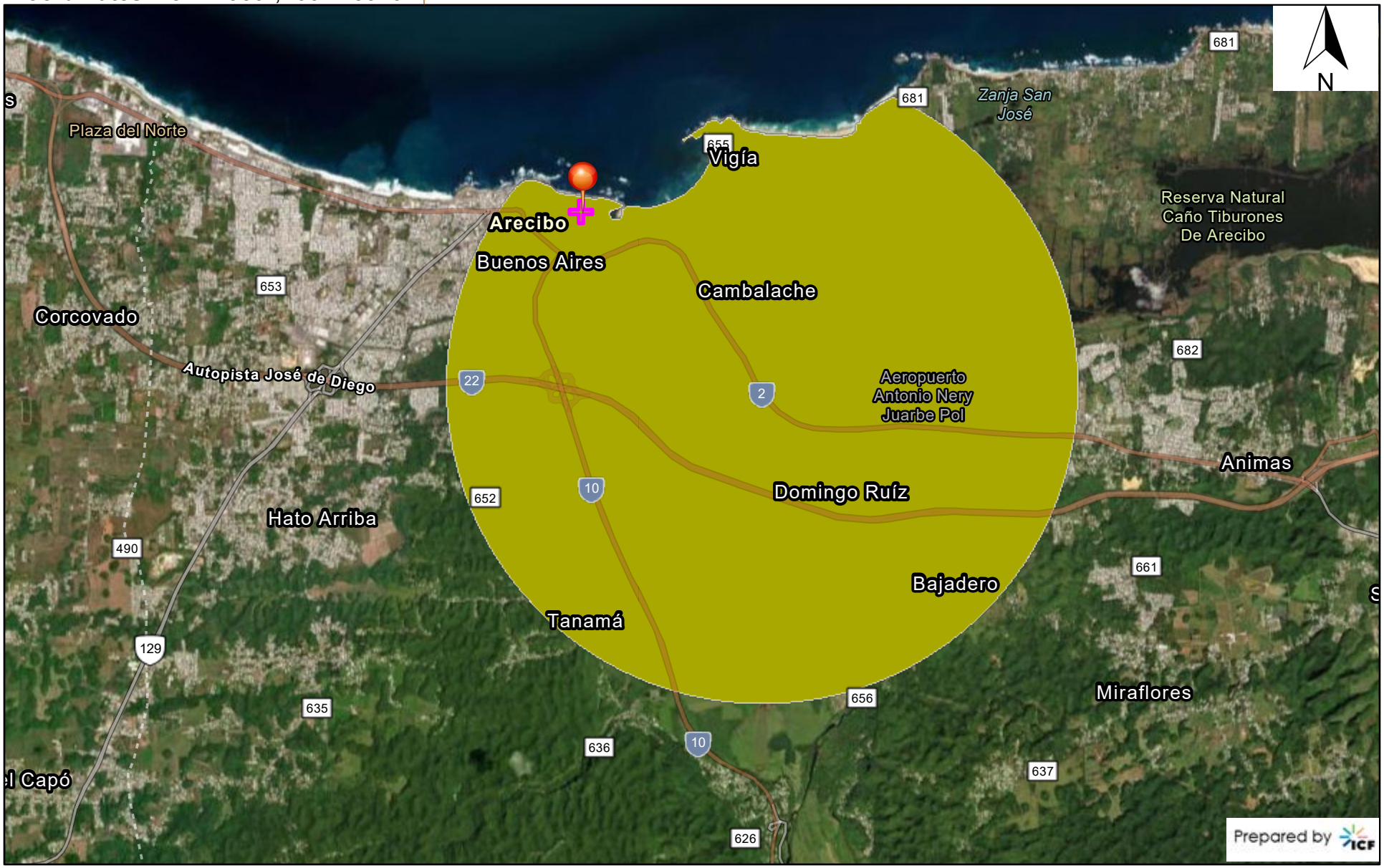

August 1, 2025

Search Result (point)

Lead (2008 standard)

Nonattainment

1:72,224

0 0.5 1 2 mi

0 0.75 1.5 3 km

Earthstar Geographics, Sources: Esri, TomTom, Garmin, FAO, NOAA, USGS, (c) OpenStreetMap contributors, and the GIS User Community, U.S.

Source: https://nepassisttool.epa.gov/nepassist/nepamap.aspx

Puerto Rico Nonattainment/Maintenance Status for Each County by Year for All Criteria Pollutants

Data is current as of July 31, 2025

Listed by County, NAAQS, Area. The 8-hour Ozone (1997) standard was revoked on April 6, 2015 and the 1-hour Ozone (1979) standard was revoked on June 15, 2005.

* The 1997 Primary Annual PM-2.5 NAAQS (level of 15 μg/m^3) is revoked in attainment and maintenance areas for that NAAQS. For additional information see the PM-2.5 NAAQS SIP Requirements Final Rule, effective October 24, 2016. (81 FR 58009)

Change the State:
PUERTO RICO GO

Important Notes

Download National Dataset: dbf | xls | Data dictionary (PDF)

County	NAAQS	Area Name	Nonattainment in Year	Redesignation to Maintenance	Classification	Whole or/ Part County	Population (2010)
PUERTO RICO							
Arecibo Municipio	Lead (2008)	Arecibo, PR	11 12 13 14 15 16 17 18 19 20 21 22 23 24 25	/ /		Part	32,185
Bayamon Municipio	Sulfur Dioxide (2010)	San Juan, PR	18 19 20 21 22 23 24 25	/ /		Part	22,921
Catano Municipio	Sulfur Dioxide (2010)	San Juan, PR	18 19 20 21 22 23 24 25	/ /		Whole	28,140
Guaynabo Municipio	PM-10 (1987)	Mun. of Guaynabo, PR	92 93 94 95 96 97 98 99 00 01 02 03 04 05 06 07 08 09	02/11/2010	Moderate	Part	90,470
Guaynabo Municipio	Sulfur Dioxide (2010)	San Juan, PR	18 19 20 21 22 23 24 25	/ /		Part	23,802
Salinas Municipio	Sulfur Dioxide (2010)	Guayama-Salinas, PR	18 19 20 21 22 23 24 25	/ /		Part	23,401
San Juan Municipio	Sulfur Dioxide (2010)	San Juan, PR	18 19 20 21 22 23 24 25	/ /		Part	147,963
Toa Baja Municipio	Sulfur Dioxide (2010)	San Juan, PR	18 19 20 21 22 23 24 25	/ /		Part	52,441

Important Notes

Appendix G:
Coastal Zone Management

PR-CRP-000771 Coastal Zone Management Map

Address: Pueblo Ward, Arecibo, PR 00612
Coordinates: 18.471980°, -66.715910°

9/12/2025

CoastalZoneManagementAct - Coastal Zone Management Act

coastal zone

World Imagery

Low Resolution 15m Imagery

High Resolution 60cm Imagery

High Resolution 30cm Imagery

Citations

1:27,389

0 0.23 0.45 0.9 mi

0 0.35 0.7 1.4 km

Maxar

Source: https://www.arcgis.com/apps/mapviewer/index.html?url=https://coast.noaa.gov:443/arcgis/rest/services/Hosted/CoastalZoneManagementAct/FeatureServer/0&source=sd

July 23, 2025

Angel G. López Guzmán
Director
Permits and Environmental Compliance Division
Disaster Recovery Office
PR Department of Housing
PO Box 21365
San Juan, PR 00928-1365

Federal Consistency Certification with the Puerto Rico Coastal Zone Management Program (PRCZMP)
CZ-2025-1118-006
Federal Assistance with CDBG funds from the City Revitalization Program
PR-CRP-000771
Revitalization of Plaza Luis Muñoz Rivera
Arecibo, Puerto Rico

Dear Mr. López:

The Puerto Rico Planning Board (PRPB) emitted a Federal Consistency Certification for the project at reference on January 15, 2025, with the condition that the applicant submits a copy of the required endorsements within 120 days from receipt of the conditioned certification emitted by the PRPB Office of Geology and Hydrogeology. The applicant submitted the following documents on March 10, 2025, and June 10, 2025:

1- Determination of Environmental Compliance for Environmental Evaluation emitted by the PR Permit Management Office under case number 2023-516182-DEA-300662 on April 2, 2025.

2- Copy of the Favorable recommendation emitted by the Puerto Rican Culture Institute on October 19, 2023.

The applicant provided all the required endorsements to evidence Consistency with the PRCZMP. Therefore, the Federal Assistance provided through the CDBG-City Revitalization Program to finance the project at reference is consistent with PRCZMP.

This determination does not preclude the possibility of obtaining any other permit or endorsement from other Commonwealth or Federal Agencies.

Thanks for your cooperation with our Program. If you have any questions concerning this matter, please contact Rose A. Ortiz Díaz at 787-723-6200 ext. 16012 or her e-mail address: ortiz_r@jp.pr.gov.

Cordially,

Luis E. Lamboy Torres
Director
Geology and Hydrogeology Office

C: Department of Housing, environmentalcdbg@vivienda.pr.gov
Angel López Guzman, Department of Housing,

ROD/

Appendix H: Contamination and Toxic Substances

PR-CRP-000771 EPA Facilities Map

Address: Pueblo Ward, Arecibo, PR 00612
Coordinates: 18.471980°, -66.715910°

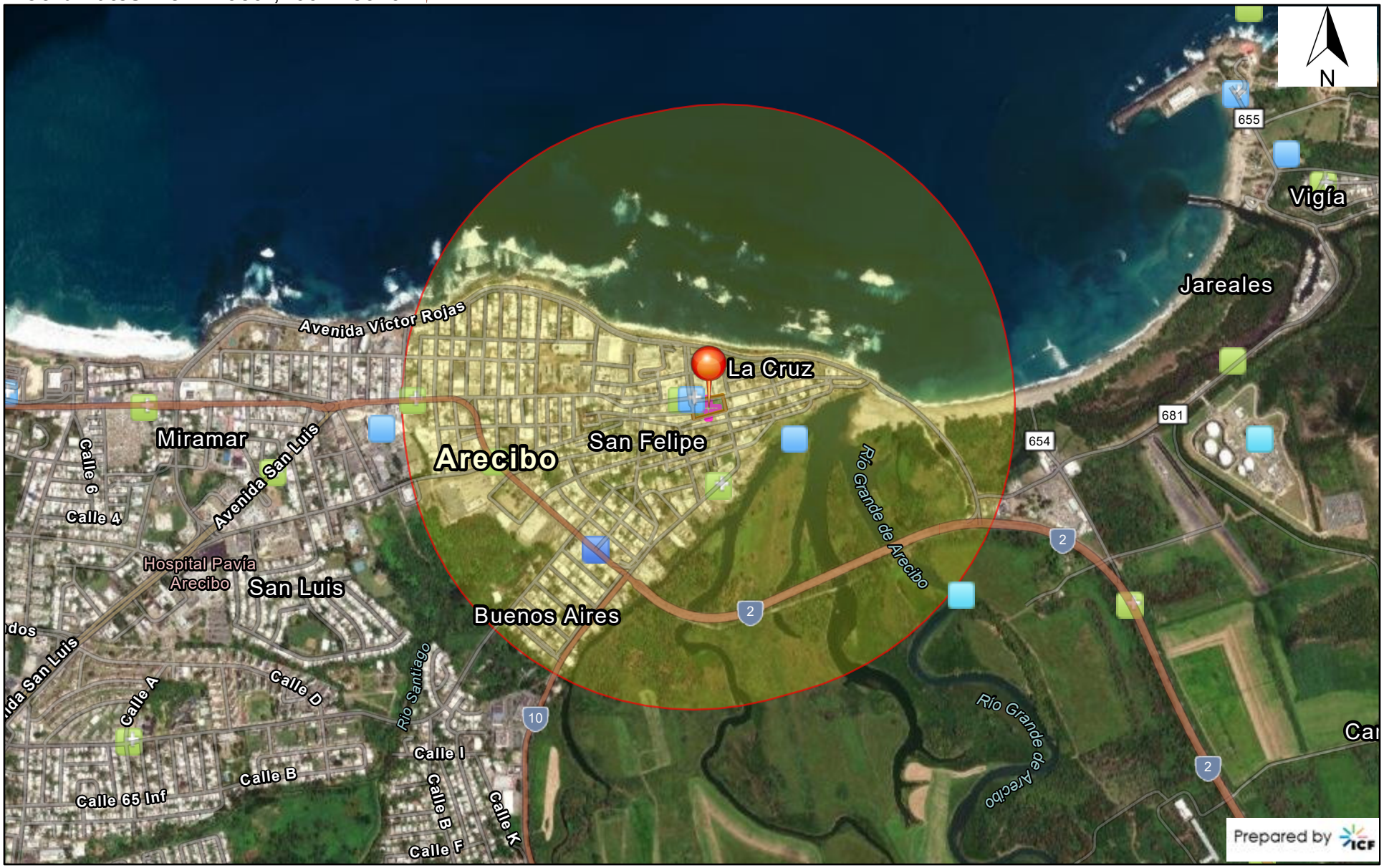

August 12, 2025

1:18,056

0 0.13 0.25 0.5 mi
0 0.23 0.45 0.9 km

- Toxic Releases (TRI)
- Water Dischargers (NPDES)
- Water Dischargers (NPDES)
- Hazardous Waste (RCRAInfo)
- Hazardous Waste (RCRAInfo)
- Air Pollution (ICIS-AIR)
- Project Buffer
- Project Area
- Search Result (point)

Sources: Esri, TomTom, Garmin, FAO, NOAA, USGS, (c) OpenStreetMap contributors, and the GIS User Community, Maxar

Source: EPA https://nepassisttool.epa.gov/nepassist/nepamap.aspx

PR-CRP-000771 NPL & Brownfields Map

Address: Pueblo Ward, Arecibo, PR 00612
Coordinates: 18.471980°, -66.715910°

August 13, 2025

Project Buffer

Search Result (point)

1:36,112

0 0.28 0.55 1.1 mi

0 0.45 0.9 1.8 km

Sources: Esri, TomTom, Garmin, FAO, NOAA, USGS, (c) OpenStreetMap contributors, and the GIS User Community, Maxar

Source:https://nepassisttool.epa.gov/nepassist/nepamap.aspx

Detailed Facility Report

Facility Summary

ARECIBO MUNICIPALITY

NUMBER 100 JOSE DE DIEGO AVENUE, ARECIBO, PR 00613

FRS (Facility Registry Service) ID: 110064622635

EPA Region: 02

Latitude: 18.47223

Longitude: -66.71642

Locational Data Source: FRS

Industries: --

Indian Country: N

Enforcement and Compliance Summary

Statute	CWA
Compliance Monitoring Activities (5 years)	1
Date of Last Compliance Monitoring Activity	04/21/2025
Compliance Status	Unknown
Qtrs in Noncompliance (of 12)	0
Qtrs with Significant Violation	0
Informal Enforcement Actions (5 years)	--
Formal Enforcement Actions (5 years)	--
Penalties from Formal Enforcement Actions (5 years)	--
EPA Cases (5 years)	--
Penalties from EPA Cases (5 years)	--

Regulatory Information

Clean Air Act (CAA): No Information

Clean Water Act (CWA): Non-Major, Permit Expired; Compliance Tracking Partially Off (PRR040029)

Resource Conservation and Recovery Act (RCRA): No Information

Safe Drinking Water Act (SDWA): No Information

Other Regulatory Reports

Air Emissions Inventory (EIS): No Information

Greenhouse Gas Emissions (eGGRT): No Information

Toxic Releases (TRI): No Information

Compliance and Emissions Data Reporting Interface (CEDRI): No Information

Go To Enforcement/Compliance Details

Known Data Problems <https://epa.gov/resources/echo-data/known-data-problems>

Facility/System Characteristics

Facility/System Characteristics

System	Statute	Identifier	Universe	Status	Areas	Permit Expiration Date	Indian Country	Latitude	Longitude
FRS		110064622635					N	18.47223	-66.71642
ICIS-NPDES	CWA	PRR040029	Non-Major: General Permit Covered Facility	Expired; Compliance Tracking Partially Off	Urban Stormwater (Small MS4)	06/30/2021	N	18.47223	-66.71642

Facility Address

System	Statute	Identifier	Facility Name	Facility Address	Facility County
FRS		110064622635	ARECIBO MUNICIPALITY	NUMBER 100 JOSE DE DIEGO AVENUE, ARECIBO, PR 00613	Arecibo Municipio
ICIS-NPDES	CWA	PRR040029	ARECIBO MUNICIPALITY	NUMBER 100 JOSE DE DIEGO AVENUE, ARECIBO, PR 00613	

Facility SIC (Standard Industrial Classification) Codes

System	Identifier	SIC Code	SIC Description
ICIS-NPDES	PRR040029	9199	General Government

Facility NAICS (North American Industry Classification System) Codes

System	Identifier	NAICS Code	NAICS Description

No data records returned

Facility Industrial Effluent Guidelines

Identifier	Effluent Guideline (40 CFR Part)	Effluent Guideline Description

No data records returned

Facility Tribe Information

Reservation Name	Tribe Name	EPA Tribal ID	Distance to Tribe (miles)

No data records returned

Enforcement and Compliance

Compliance Monitoring History

Last 5 Years

Statute	Source ID	System	Activity Type	Compliance Monitoring Type	Lead Agency	Date	Finding (if applicable)
CWA	PRR040029	ICIS-NPDES	Offsite Record Review	Urban Stormwater (MS4) - Desk Audit	EPA	04/21/2025	

Entries in italics are not included in ECHO's Compliance Monitoring Activity counts because they are not compliance monitoring strategy <https://www.epa.gov/compliance/compliance-monitoring-programs> *activities or because they are not counted as inspections within EPA's Annual Results* <https://www.epa.gov/enforcement/enforcement-data-and-results>.

Compliance Summary Data

Statute	Source ID	Current SNC (Significant Noncompliance)/HPV (High Priority Violation)	Current As Of	Qtrs with NC (Noncompliance) (of 12)	Data Last Refreshed
CWA	PRR040029	No	03/31/2025	0	08/08/2025

Three-Year Compliance History by Quarter

Statute	Program/Pollutant/Violation Type	QTR 1	QTR 2	QTR 3	QTR 4	QTR 5	QTR 6	QTR 7	QTR 8	QTR 9	QTR 10	QTR 11
CWA (Source ID: PRR040029)		04/01-06/30/22	07/01-09/30/22	10/01-12/31/22	01/01-03/31/23	04/01-06/30/23	07/01-09/30/23	10/01-12/31/23	01/01-03/31/24	04/01-06/30/24	07/01-09/30/24	10/01-12/31/24
	Facility-Level Status	Unknown	Unknown	Unknown	Unknown	Unknown	Unknown	Unknown	Unknown	Unknown	Unknown	Unknown
	Quarterly Noncompliance Report History	Undetermined	Undetermined	Undetermined	Undetermined	Undetermined	Undetermined	Undetermined	Undetermined	Undetermined	Undetermined	Undetermined

Informal Enforcement Actions

Last 5 Years

Statute	System	Source ID	Type of Action	Lead Agency	Date

No data records returned

Entries in italics are not counted as "informal enforcement actions" in EPA policies pertaining to enforcement response tools.

Formal Enforcement Actions

Last 5 Years

Statute	System	Law/ Section	Source ID	Type of Action	Case No.	Lead Agency	Case Name	Issued/ Filed Date	Settlements/ Actions	Settlement/ Action Date	Federal Penalty Assessed	State/ Local Penalty Assessed	Penalty Amount Collected	SEP Value	Comp Action Cost

No data records returned

Environmental Conditions

Watersheds

12-Digit WBD (Watershed Boundary Dataset) HUC (RAD (Reach Address Database))	WBD (Watershed Boundary Dataset) Subwatershed Name (RAD (Reach Address Database))	State Water Body Name (ICIS (Integrated Compliance Information System))	Beach Closures Within Last Year	Beach Closures Within Last Two Years	Pollutants Potentially Related to Impairment	Watershed with ESA (Endangered Species Act)-listed Aquatic Species?
210100020414	Rio Grande de Arecibo at mouth	--	No	No	--	Yes

Assessed Waters From Latest State Submission (ATTAINS)

State	Report Cycle	Assessment Unit ID	Assessment Unit Name	Water Condition	Cause Groups Impaired	Drinking Water Use	Ecological Use	Fish Consumption Use	Recreation Use	Other Use
PR	2024	PRNR7A1a	RIO SANTIAGO	Impaired - With Restoration Plan	PATHOGENS	Not Assessed	Insufficient Information	--	Not Supporting	--

Air Quality Nonattainment Areas

Pollutant	Within Nonattainment Status Area?	Nonattainment Status Applicable Standard(s)	Within Maintenance Status Area?	Maintenance Status Applicable Standard(s)
Ozone	No	--	No	--
Lead	Yes	Lead (2008)	No	--
Particulate Matter	No	--	No	--
Carbon Monoxide	No	--	No	--
Sulfur Dioxide	No	--	No	--

Pollutants

Toxics Release Inventory History of Reported Chemicals Released or Transferred in Pounds per Year at Site

TRI Facility ID	Year	Air Emissions	Surface Water Discharges	Off-Site Transfers to POTWs (Publicly Owned Treatment Works)	Underground Injections	Disposal to Land	Total On-Site Releases	Total Off-Site Transfers

No data records returned

Toxics Release Inventory Total Releases and Transfers in Pounds by Chemical and Year

Chemical Name

No data records returned

CWA (Clean Water Act) Discharge Monitoring Report (DMR) Pollutant Loadings

DMR and TRI Multi-Year Loading Report

NPDES ID	Description

No data records returned

Community

Demographic Profile of Surrounding Area (1-Mile Radius)

This section provides demographic information regarding the community surrounding the facility. ECHO compliance data alone are not sufficient to determine whether violations at a particular facility had negative impacts on public health or the environment. Statistics are based upon the 2022 American Community Survey (ACS) 5-year Summary and are accurate to the extent that the facility latitude and longitude listed below are correct. Census boundaries and demographic data for U.S. Territories are based on the "2020 Island Areas Demographic Profiles" from the U.S. Census Bureau. EPA's spatial processing methodology considers the overlap between the selected radii and ACS census block groups in determining the demographics surrounding the facility. For more detail about this methodology, see the DFR Data Dictionary <https://epa.gov/help/reports/dfr-data-dictionary#demographic>.

General Statistics (ACS (American Community Survey))	
Total Persons	3,334
Population Density	2,007/sq.mi.
Housing Units in Area	2,262
Percent People of Color	100%
Households in Area	1,413
Households on Public Assistance	116
Persons With Low Income	2,830
Percent With Low Income	86%

Geography	
Radius of Selected Area	1 mi.
Center Latitude	18.47223
Center Longitude	-66.71642
Total Area	3.121 sq.mi.
Land Area	53%
Water Area	47%

Income Breakdown (ACS (American Community Survey)) - Households (%)	
Less than $15,000	698 (49.33%)

Age Breakdown (ACS (American Community Survey)) - Persons (%)	
Children 5 years and younger	177 (5%)
Minors 17 years and younger	618 (19%)
Adults 18 years and older	2,716 (81%)
Seniors 65 years and older	853 (26%)

Race Breakdown (ACS (American Community Survey)) - Persons (%)	
White	1,213 (36%)
African-American	115 (3%)
Hispanic-Origin	3,319 (100%)
Asian	64 (2%)
Hawaiian/Pacific Islander	0 (0%)
American Indian	2 (0%)
Other/Multiracial	736 (22%)

Education Level (Persons 25 & older) (ACS (American Community Survey)) - Persons (%)	
Less than 9th Grade	221 (9.12%)
9th through 12th Grade	241 (9.95%)
High School Diploma	727 (30.02%)
Some College/2-year	304 (12.55%)

Income Breakdown (ACS (American Community Survey)) - Households (%)	
$15,000 - $25,000	294 (20.78%)
$25,000 - $50,000	286 (20.21%)
$50,000 - $75,000	94 (6.64%)
Greater than $75,000	43 (3.04%)

Education Level (Persons 25 & older) (ACS (American Community Survey)) - Persons (%)	
B.S./B.A. (Bachelor of Science/Bachelor of Arts) or More	739 (30.51%)

Detailed Facility Report

Facility Summary

BUENOS AIRES COMMUNITY MS4

PO BOX 1086, ARECIBO, PR 00613

FRS (Facility Registry Service) ID: 110039184254

EPA Region: 02

Latitude: 18.471111

Longitude: -66.713333

Locational Data Source: NPDES

Industries: --

Indian Country: N

Enforcement and Compliance Summary

Statute	CWA
Compliance Monitoring Activities (5 years)	--
Date of Last Compliance Monitoring Activity	11/16/2010
Compliance Status	Not Applicable
Qtrs in Noncompliance (of 12)	0
Qtrs with Significant Violation	0
Informal Enforcement Actions (5 years)	--
Formal Enforcement Actions (5 years)	--
Penalties from Formal Enforcement Actions (5 years)	--
EPA Cases (5 years)	--
Penalties from EPA Cases (5 years)	--

Regulatory Information

Clean Air Act (CAA): No Information

Clean Water Act (CWA): Non-Major, (PRU000525)

Resource Conservation and Recovery Act (RCRA): No Information

Safe Drinking Water Act (SDWA): No Information

Other Regulatory Reports

Air Emissions Inventory (EIS): No Information

Greenhouse Gas Emissions (eGGRT): No Information

Toxic Releases (TRI): No Information

Compliance and Emissions Data Reporting Interface (CEDRI): No Information

Go To Enforcement/Compliance Details

Known Data Problems <https://epa.gov/resources/echo-data/known-data-problems>

Facility/System Characteristics

Facility/System Characteristics

System	Statute	Identifier	Universe	Status	Areas	Permit Expiration Date	Indian Country	Latitude	Longitude
FRS		110039184254					N	18.471111	-66.713333
ICIS-NPDES	CWA	PRU000525	Non-Major: Unpermitted Facility				N	18.471111	66.713333

Facility Address

System	Statute	Identifier	Facility Name	Facility Address	Facility County
FRS		110039184254	BUENOS AIRES COMMUNITY MS4	PO BOX 1086, ARECIBO, PR 00613	

System	Statute	Identifier	Facility Name	Facility Address	Facility County
ICIS-NPDES	CWA	PRU000525	BUENOS AIRES COMMUNITY MS4	PO BOX 1086, ARECIBO, PR 00613	Arecibo Municipio

Facility SIC (Standard Industrial Classification) Codes

System	Identifier	SIC Code	SIC Description

No data records returned

Facility NAICS (North American Industry Classification System) Codes

System	Identifier	NAICS Code	NAICS Description

No data records returned

Facility Industrial Effluent Guidelines

Identifier	Effluent Guideline (40 CFR Part)	Effluent Guideline Description

No data records returned

Facility Tribe Information

Reservation Name	Tribe Name	EPA Tribal ID	Distance to Tribe (miles)

No data records returned

Enforcement and Compliance

Compliance Monitoring History

Last 5 Years

Statute	Source ID	System	Activity Type	Compliance Monitoring Type	Lead Agency	Date	Finding (if applicable)

No data records returned

Entries in italics are not included in ECHO's Compliance Monitoring Activity counts because they are not compliance monitoring strategy <https://www.epa.gov/compliance/compliance-monitoring-programs> *activities or because they are not counted as inspections within EPA's Annual Results* <https://www.epa.gov/enforcement/enforcement-data-and-results>.

Compliance Summary Data

Statute	Source ID	Current SNC (Significant Noncompliance)/HPV (High Priority Violation)	Current As Of	Qtrs with NC (Noncompliance) (of 12)	Data Last Refreshed
CWA	PRU000525	No	03/31/2025	0	08/08/2025

Three-Year Compliance History by Quarter

Statute	Program/Pollutant/Violation Type	QTR 1	QTR 2	QTR 3	QTR 4	QTR 5	QTR 6	QTR 7	QTR 8	QTR 9	QTR 10	QTR 11
CWA (Source ID: PRU000525)		04/01-06/30/22	07/01-09/30/22	10/01-12/31/22	01/01-03/31/23	04/01-06/30/23	07/01-09/30/23	10/01-12/31/23	01/01-03/31/24	04/01-06/30/24	07/01-09/30/24	10/01-12/31/24
	Facility-Level Status	Not Applicable	Not Applicable	Not Applicable	Not Applicable	Not Applicable	Not Applicable	Not Applicable	Not Applicable	Not Applicable	Not Applicable	Not Applicable
	Quarterly Noncompliance Report History											

Informal Enforcement Actions

Last 5 Years

Statute	System	Source ID	Type of Action	Lead Agency	Date

No data records returned

Entries in italics are not counted as "informal enforcement actions" in EPA policies pertaining to enforcement response tools.

Formal Enforcement Actions

Last 5 Years

Statute	System	Law/ Section	Source ID	Type of Action	Case No.	Lead Agency	Case Name	Issued/ Filed Date	Settlements/ Actions	Settlement/ Action Date	Federal Penalty Assessed	State/ Local Penalty Assessed	Penalty Amount Collected	SEP Value	Comp Action Cost

No data records returned

Environmental Conditions

Watersheds

12-Digit WBD (Watershed Boundary Dataset) HUC (RAD (Reach Address Database))	WBD (Watershed Boundary Dataset) Subwatershed Name (RAD (Reach Address Database))	State Water Body Name (ICIS (Integrated Compliance Information System))	Beach Closures Within Last Year	Beach Closures Within Last Two Years	Pollutants Potentially Related to Impairment	Watershed with ESA (Endangered Species Act)-listed Aquatic Species?
210100020414	Rio Grande de Arecibo at mouth	--	No	No	--	Yes

Assessed Waters From Latest State Submission (ATTAINS)

State	Report Cycle	Assessment Unit ID	Assessment Unit Name	Water Condition	Cause Groups Impaired	Drinking Water Use	Ecological Use	Fish Consumption Use	Recreation Use	Other Use
PR	2024	PRNR7A1a	RIO SANTIAGO	Impaired - With Restoration Plan	PATHOGENS	Not Assessed	Insufficient Information	--	Not Supporting	--

Air Quality Nonattainment Areas

Pollutant	Within Nonattainment Status Area?	Nonattainment Status Applicable Standard(s)	Within Maintenance Status Area?	Maintenance Status Applicable Standard(s)
Ozone	No	--	No	--
Lead	Yes	Lead (2008)	No	--
Particulate Matter	No	--	No	--
Carbon Monoxide	No	--	No	--
Sulfur Dioxide	No	--	No	--

Pollutants

Toxics Release Inventory History of Reported Chemicals Released or Transferred in Pounds per Year at Site

TRI Facility ID	Year	Air Emissions	Surface Water Discharges	Off-Site Transfers to POTWs (Publicly Owned Treatment Works)	Underground Injections	Disposal to Land	Total On-Site Releases	Total Off-Site Transfers

No data records returned

Toxics Release Inventory Total Releases and Transfers in Pounds by Chemical and Year

Chemical Name

No data records returned

CWA (Clean Water Act) Discharge Monitoring Report (DMR) Pollutant Loadings

DMR and TRI Multi-Year Loading Report

NPDES ID	Description

No data records returned

Community

Demographic Profile of Surrounding Area (1-Mile Radius)

This section provides demographic information regarding the community surrounding the facility. ECHO compliance data alone are not sufficient to determine whether violations at a particular facility had negative impacts on public health or the environment. Statistics are based upon the 2022 American Community Survey (ACS) 5-year Summary and are accurate to the extent that the facility latitude and longitude listed below are correct. Census boundaries and demographic data for U.S. Territories are based on the "2020 Island Areas Demographic Profiles" from the U.S. Census Bureau. EPA's spatial processing methodology considers the overlap between the selected radii and ACS census block groups in determining the demographics surrounding the facility. For more detail about this methodology, see the DFR Data Dictionary <https://epa.gov/help/reports/dfr-data-dictionary#demographic>.

General Statistics (ACS (American Community Survey))	
Total Persons	2,460
Population Density	1,330/sq.mi.
Housing Units in Area	1,813
Percent People of Color	100%
Households in Area	1,054
Households on Public Assistance	64
Persons With Low Income	2,014
Percent With Low Income	84%

Geography	
Radius of Selected Area	1 mi.
Center Latitude	18.471111
Center Longitude	-66.713333
Total Area	3.121 sq.mi.
Land Area	59%
Water Area	41%

Income Breakdown (ACS (American Community Survey)) - Households (%)	
Less than $15,000	462 (43.87%)
$15,000 - $25,000	225 (21.37%)
$25,000 - $50,000	248 (23.55%)
$50,000 - $75,000	80 (7.6%)
Greater than $75,000	38 (3.61%)

Age Breakdown (ACS (American Community Survey)) - Persons (%)	
Children 5 years and younger	101 (4%)
Minors 17 years and younger	396 (16%)
Adults 18 years and older	2,063 (84%)
Seniors 65 years and older	722 (29%)

Race Breakdown (ACS (American Community Survey)) - Persons (%)	
White	897 (36%)
African-American	92 (4%)
Hispanic-Origin	2,455 (100%)
Asian	47 (2%)
Hawaiian/Pacific Islander	0 (0%)
American Indian	4 (0%)
Other/Multiracial	530 (22%)

Education Level (Persons 25 & older) (ACS (American Community Survey)) - Persons (%)	
Less than 9th Grade	171 (9.13%)
9th through 12th Grade	178 (9.51%)
High School Diploma	521 (27.83%)
Some College/2-year	248 (13.25%)
B.S./B.A. (Bachelor of Science/Bachelor of Arts) or More	597 (31.89%)

Detailed Facility Report

Facility Summary

CARIBBEAN RCCYCLING INC

415 JUAN ROSADO AVE, ARECIBO, PR 00612

FRS (Facility Registry Service) ID: 110066978462

EPA Region: 02

Latitude: 18.46981

Longitude: -66.71557

Locational Data Source: FRS

Industries: --

Indian Country: N

Enforcement and Compliance Summary

Statute	RCRA
Compliance Monitoring Activities (5 years)	--
Date of Last Compliance Monitoring Activity	06/04/2015
Compliance Status	No Violation Identified
Qtrs in Noncompliance (of 12)	0
Qtrs with Significant Violation	0
Informal Enforcement Actions (5 years)	--
Formal Enforcement Actions (5 years)	--
Penalties from Formal Enforcement Actions (5 years)	--
EPA Cases (5 years)	--
Penalties from EPA Cases (5 years)	--

Regulatory Information

Clean Air Act (CAA): No Information

Clean Water Act (CWA): No Information

Resource Conservation and Recovery Act (RCRA): Inactive Other, (PRN008028235)

Safe Drinking Water Act (SDWA): No Information

Other Regulatory Reports

Air Emissions Inventory (EIS): No Information

Greenhouse Gas Emissions (eGGRT): No Information

Toxic Releases (TRI): No Information

Compliance and Emissions Data Reporting Interface (CEDRI): No Information

Go To Enforcement/Compliance Details

Known Data Problems <https://epa.gov/resources/echo-data/known-data-problems>

Facility/System Characteristics

Facility/System Characteristics

System	Statute	Identifier	Universe	Status	Areas	Permit Expiration Date	Indian Country	Latitude	Longitude
FRS		110066978462					N	18.46981	-66.71557
RCRAInfo	RCRA	PRN008028235	Other	Inactive ( )			N	18.464857	-66.720251

Facility Address

System	Statute	Identifier	Facility Name	Facility Address	Facility County
FRS		110066978462	CARIBBEAN RCCYCLING INC	415 JUAN ROSADO AVE, ARECIBO, PR 00612	Arecibo Municipio
RCRAInfo	RCRA	PRN008028235	CARIBBEAN RCCYCLING INC	415 JUAN ROSADO AVE, ARECIBO, PR 00612	Arecibo Municipio

Facility SIC (Standard Industrial Classification) Codes

System	Identifier	SIC Code	SIC Description

No data records returned

Facility NAICS (North American Industry Classification System) Codes

System	Identifier	NAICS Code	NAICS Description

No data records returned

Facility Tribe Information

Reservation Name	Tribe Name	EPA Tribal ID	Distance to Tribe (miles)

No data records returned

Enforcement and Compliance

Compliance Monitoring History

Last 5 Years

Statute	Source ID	System	Activity Type	Compliance Monitoring Type	Lead Agency	Date	Finding (if applicable)

No data records returned

Entries in italics are not included in ECHO's Compliance Monitoring Activity counts because they are not compliance monitoring strategy <https://www.epa.gov/compliance/compliance-monitoring-programs> *activities or because they are not counted as inspections within EPA's Annual Results* <https://www.epa.gov/enforcement/enforcement-data-and-results>.

Compliance Summary Data

Statute	Source ID	Current SNC (Significant Noncompliance)/HPV (High Priority Violation)	Current As Of	Qtrs with NC (Noncompliance) (of 12)	Data Last Refreshed
RCRA	PRN008028235	No	08/09/2025	0	08/08/2025

Three-Year Compliance History by Quarter

Statute	Program/Pollutant/Violation Type		QTR 1	QTR 2	QTR 3	QTR 4	QTR 5	QTR 6	QTR 7	QTR 8	QTR 9	QTR 10	QTR 11
RCRA (Source ID: PRN008028235)			10/01-12/31/22	01/01-03/31/23	04/01-06/30/23	07/01-09/30/23	10/01-12/31/23	01/01-03/31/24	04/01-06/30/24	07/01-09/30/24	10/01-12/31/24	01/01-03/31/25	04/01-06/30/25
	Facility-Level Status		No Violation Identified	No Violation Identified	No Violation Identified	No Violation Identified	No Violation Identified	No Violation Identified	No Violation Identified	No Violation Identified	No Violation Identified	No Violation Identified	No Violation Identified
	Violation	Agency											

Informal Enforcement Actions

Last 5 Years

Statute	System	Source ID	Type of Action	Lead Agency	Date

No data records returned

Entries in italics are not counted as "informal enforcement actions" in EPA policies pertaining to enforcement response tools.

Formal Enforcement Actions

Last 5 Years

Statute	System	Law/ Section	Source ID	Type of Action	Case No.	Lead Agency	Case Name	Issued/ Filed Date	Settlements/ Actions	Settlement/ Action Date	Federal Penalty Assessed	State/ Local Penalty Assessed	Penalty Amount Collected	SEP Value	Comp Action Cost

No data records returned

Environmental Conditions

Watersheds

12-Digit WBD (Watershed Boundary Dataset) HUC (RAD (Reach Address Database))	WBD (Watershed Boundary Dataset) Subwatershed Name (RAD (Reach Address Database))	State Water Body Name (ICIS (Integrated Compliance Information System))	Beach Closures Within Last Year	Beach Closures Within Last Two Years	Pollutants Potentially Related to Impairment	Watershed with ESA (Endangered Species Act)-listed Aquatic Species?

No data records returned

Assessed Waters From Latest State Submission (ATTAINS)

State	Report Cycle	Assessment Unit ID	Assessment Unit Name	Water Condition	Cause Groups Impaired	Drinking Water Use	Ecological Use	Fish Consumption Use	Recreation Use	Other Use

No data records returned

Air Quality Nonattainment Areas

Pollutant	Within Nonattainment Status Area?	Nonattainment Status Applicable Standard(s)	Within Maintenance Status Area?	Maintenance Status Applicable Standard(s)
Ozone	No	--	No	--
Lead	Yes	Lead (2008)	No	--
Particulate Matter	No	--	No	--
Carbon Monoxide	No	--	No	--
Sulfur Dioxide	No	--	No	--

Pollutants

Toxics Release Inventory History of Reported Chemicals Released or Transferred in Pounds per Year at Site

TRI Facility ID	Year	Air Emissions	Surface Water Discharges	Off-Site Transfers to POTWs (Publicly Owned Treatment Works)	Underground Injections	Disposal to Land	Total On-Site Releases	Total Off-Site Transfers

No data records returned

Toxics Release Inventory Total Releases and Transfers in Pounds by Chemical and Year

Chemical Name

No data records returned

Community

Demographic Profile of Surrounding Area (1-Mile Radius)

This section provides demographic information regarding the community surrounding the facility. ECHO compliance data alone are not sufficient to determine whether violations at a particular facility had negative impacts on public health or the environment. Statistics are based upon the 2022 American Community Survey (ACS) 5-year Summary and are accurate to the extent that the facility latitude and longitude listed below are correct. Census boundaries and demographic data for U.S. Territories are based on the "2020 Island Areas Demographic Profiles" from the U.S. Census Bureau. EPA's spatial processing methodology considers the overlap between the selected radii and ACS census block groups in determining the demographics surrounding the facility. For more detail about this methodology, see the DFR Data Dictionary <https://epa.gov/help/reports/dfr-data-dictionary#demographic>.

General Statistics (ACS (American Community Survey))	
Total Persons	3,723
Population Density	1,899/sq.mi.
Housing Units in Area	2,433
Percent People of Color	100%
Households in Area	1,560
Households on Public Assistance	137
Persons With Low Income	3,183
Percent With Low Income	87%

Geography	
Radius of Selected Area	1 mi.
Center Latitude	18.46981
Center Longitude	-66.71557
Total Area	3.121 sq.mi.
Land Area	63%
Water Area	37%

Income Breakdown (ACS (American Community Survey)) - Households (%)	
Less than $15,000	785 (50.32%)
$15,000 - $25,000	324 (20.77%)
$25,000 - $50,000	305 (19.55%)
$50,000 - $75,000	99 (6.35%)
Greater than $75,000	47 (3.01%)

Age Breakdown (ACS (American Community Survey)) - Persons (%)	
Children 5 years and younger	216 (6%)
Minors 17 years and younger	738 (20%)
Adults 18 years and older	2,987 (80%)
Seniors 65 years and older	908 (24%)

Race Breakdown (ACS (American Community Survey)) - Persons (%)	
White	1,337 (36%)
African-American	124 (3%)
Hispanic-Origin	3,702 (99%)
Asian	64 (2%)
Hawaiian/Pacific Islander	0 (0%)
American Indian	3 (0%)
Other/Multiracial	861 (23%)

Education Level (Persons 25 & older) (ACS (American Community Survey)) - Persons (%)	
Less than 9th Grade	237 (8.96%)
9th through 12th Grade	275 (10.4%)
High School Diploma	815 (30.82%)
Some College/2-year	341 (12.9%)
B.S./B.A. (Bachelor of Science/Bachelor of Arts) or More	776 (29.35%)

Detailed Facility Report

Facility Summary

DEPT OF ED - MARIA CADILLA

AVE ESTEBAN PADILLA, ARECIBO, PR 00613

FRS (Facility Registry Service) ID: 110007802324

EPA Region: 02

Latitude: 18.4715

Longitude: -66.72185

Locational Data Source: FRS

Industries: --

Indian Country: N

Enforcement and Compliance Summary

Statute	RCRA
Compliance Monitoring Activities (5 years)	--
Date of Last Compliance Monitoring Activity	--
Compliance Status	No Violation Identified
Qtrs in Noncompliance (of 12)	0
Qtrs with Significant Violation	0
Informal Enforcement Actions (5 years)	--
Formal Enforcement Actions (5 years)	--
Penalties from Formal Enforcement Actions (5 years)	--
EPA Cases (5 years)	--
Penalties from EPA Cases (5 years)	--

Regulatory Information

Clean Air Act (CAA): No Information

Clean Water Act (CWA): No Information

Resource Conservation and Recovery Act (RCRA): Inactive Other, (PR0000012625)

Safe Drinking Water Act (SDWA): No Information

Other Regulatory Reports

Air Emissions Inventory (EIS): No Information

Greenhouse Gas Emissions (eGGRT): No Information

Toxic Releases (TRI): No Information

Compliance and Emissions Data Reporting Interface (CEDRI): No Information

Go To Enforcement/Compliance Details

Known Data Problems <https://epa.gov/resources/echo-data/known-data-problems>

Facility/System Characteristics

Facility/System Characteristics

System	Statute	Identifier	Universe	Status	Areas	Permit Expiration Date	Indian Country	Latitude	Longitude
FRS		110007802324					N	18.4715	-66.72185
RCRAInfo	RCRA	PR0000012625	Other	Inactive ( )			N		

Facility Address

System	Statute	Identifier	Facility Name	Facility Address	Facility County
FRS		110007802324	DEPT OF ED - MARIA CADILLA	AVE ESTEBAN PADILLA, ARECIBO, PR 00613	Arecibo Municipio
RCRAInfo	RCRA	PR0000012625	DEPT OF ED - MARIA CADILLA	AVE ESTEBAN PADILLA, ARECIBO, PR 00613	Arecibo Municipio

Facility SIC (Standard Industrial Classification) Codes

System	Identifier	SIC Code	SIC Description

No data records returned

Facility NAICS (North American Industry Classification System) Codes

System	Identifier	NAICS Code	NAICS Description

No data records returned

Facility Tribe Information

Reservation Name	Tribe Name	EPA Tribal ID	Distance to Tribe (miles)

No data records returned

Enforcement and Compliance

Compliance Monitoring History

Last 5 Years

Statute	Source ID	System	Activity Type	Compliance Monitoring Type	Lead Agency	Date	Finding (if applicable)

No data records returned

Entries in italics are not included in ECHO's Compliance Monitoring Activity counts because they are not compliance monitoring strategy <https://www.epa.gov/compliance/compliance-monitoring-programs> *activities or because they are not counted as inspections within EPA's Annual Results* <https://www.epa.gov/enforcement/enforcement-data-and-results>.

Compliance Summary Data

Statute	Source ID	Current SNC (Significant Noncompliance)/HPV (High Priority Violation)	Current As Of	Qtrs with NC (Noncompliance) (of 12)	Data Last Refreshed
RCRA	PR0000012625	No	08/09/2025	0	08/08/2025

Three-Year Compliance History by Quarter

Statute	Program/Pollutant/Violation Type		QTR 1	QTR 2	QTR 3	QTR 4	QTR 5	QTR 6	QTR 7	QTR 8	QTR 9	QTR 10	QTR 11
RCRA (Source ID: PR0000012625)			10/01-12/31/22	01/01-03/31/23	04/01-06/30/23	07/01-09/30/23	10/01-12/31/23	01/01-03/31/24	04/01-06/30/24	07/01-09/30/24	10/01-12/31/24	01/01-03/31/25	04/01-06/30/25
	Facility-Level Status		No Violation Identified	No Violation Identified	No Violation Identified	No Violation Identified	No Violation Identified	No Violation Identified	No Violation Identified	No Violation Identified	No Violation Identified	No Violation Identified	No Violation Identified
	Violation	Agency											

Informal Enforcement Actions

Last 5 Years

Statute	System	Source ID	Type of Action	Lead Agency	Date

No data records returned

Entries in italics are not counted as "informal enforcement actions" in EPA policies pertaining to enforcement response tools.

Formal Enforcement Actions

Last 5 Years

Statute	System	Law/ Section	Source ID	Type of Action	Case No.	Lead Agency	Case Name	Issued/ Filed Date	Settlements/ Actions	Settlement/ Action Date	Federal Penalty Assessed	State/ Local Penalty Assessed	Penalty Amount Collected	SEP Value	Comp Action Cost

No data records returned

Environmental Conditions

Watersheds

12-Digit WBD (Watershed Boundary Dataset) HUC (RAD (Reach Address Database))	WBD (Watershed Boundary Dataset) Subwatershed Name (RAD (Reach Address Database))	State Water Body Name (ICIS (Integrated Compliance Information System))	Beach Closures Within Last Year	Beach Closures Within Last Two Years	Pollutants Potentially Related to Impairment	Watershed with ESA (Endangered Species Act)-listed Aquatic Species?

No data records returned

Assessed Waters From Latest State Submission (ATTAINS)

State	Report Cycle	Assessment Unit ID	Assessment Unit Name	Water Condition	Cause Groups Impaired	Drinking Water Use	Ecological Use	Fish Consumption Use	Recreation Use	Other Use

No data records returned

Air Quality Nonattainment Areas

Pollutant	Within Nonattainment Status Area?	Nonattainment Status Applicable Standard(s)	Within Maintenance Status Area?	Maintenance Status Applicable Standard(s)
Ozone	No	--	No	--
Lead	Yes	Lead (2008)	No	--
Particulate Matter	No	--	No	--
Carbon Monoxide	No	--	No	--
Sulfur Dioxide	No	--	No	--

Pollutants

Toxics Release Inventory History of Reported Chemicals Released or Transferred in Pounds per Year at Site

TRI Facility ID	Year	Air Emissions	Surface Water Discharges	Off-Site Transfers to POTWs (Publicly Owned Treatment Works)	Underground Injections	Disposal to Land	Total On-Site Releases	Total Off-Site Transfers

No data records returned

Toxics Release Inventory Total Releases and Transfers in Pounds by Chemical and Year

Chemical Name

No data records returned

Community

Demographic Profile of Surrounding Area (1-Mile Radius)

This section provides demographic information regarding the community surrounding the facility. ECHO compliance data alone are not sufficient to determine whether violations at a particular facility had negative impacts on public health or the environment. Statistics are based upon the 2022 American Community Survey (ACS) 5-year Summary and are accurate to the extent that the facility latitude and longitude listed below are correct. Census boundaries and demographic data for U.S. Territories are based on the "2020 Island Areas Demographic Profiles" from the U.S. Census Bureau. EPA's spatial processing methodology considers the overlap between the selected radii and ACS census block groups in determining the demographics surrounding the facility. For more detail about this methodology, see the DFR Data Dictionary <https://epa.gov/help/reports/dfr-data-dictionary#demographic>.

General Statistics (ACS (American Community Survey))	
Total Persons	6,805
Population Density	3,854/sq.mi.
Housing Units in Area	4,037
Percent People of Color	100%
Households in Area	2,848
Households on Public Assistance	238
Persons With Low Income	5,955
Percent With Low Income	89%

Geography	
Radius of Selected Area	1 mi.
Center Latitude	18.4715
Center Longitude	-66.72185
Total Area	3.121 sq.mi.
Land Area	57%
Water Area	43%

Income Breakdown (ACS (American Community Survey)) - Households (%)	
Less than $15,000	1,627 (57.11%)
$15,000 - $25,000	509 (17.87%)
$25,000 - $50,000	514 (18.04%)
$50,000 - $75,000	143 (5.02%)
Greater than $75,000	56 (1.97%)

Age Breakdown (ACS (American Community Survey)) - Persons (%)	
Children 5 years and younger	418 (6%)
Minors 17 years and younger	1,559 (23%)
Adults 18 years and older	5,247 (77%)
Seniors 65 years and older	1,484 (22%)

Race Breakdown (ACS (American Community Survey)) - Persons (%)	
White	2,397 (35%)
African-American	157 (2%)
Hispanic-Origin	6,741 (99%)
Asian	122 (2%)
Hawaiian/Pacific Islander	0 (0%)
American Indian	1 (0%)
Other/Multiracial	1,557 (23%)

Education Level (Persons 25 & older) (ACS (American Community Survey)) - Persons (%)	
Less than 9th Grade	581 (12.37%)
9th through 12th Grade	469 (9.99%)
High School Diploma	1,645 (35.04%)
Some College/2-year	479 (10.2%)
B.S./B.A. (Bachelor of Science/Bachelor of Arts) or More	1,140 (24.28%)

Detailed Facility Report

Facility Summary

ESSO STANDARD OIL CO - PR CO-117

AVE JUAN ROSADO 253, ARECIBO, PR 00612

FRS (Facility Registry Service) ID: 110004894393

EPA Region: 02

Latitude: 18.46801

Longitude: -66.71763

Locational Data Source: FRS

Industries: --

Indian Country: N

Enforcement and Compliance Summary

Statute	RCRA
Compliance Monitoring Activities (5 years)	--
Date of Last Compliance Monitoring Activity	09/15/2000
Compliance Status	No Violation Identified
Qtrs in Noncompliance (of 12)	0
Qtrs with Significant Violation	0
Informal Enforcement Actions (5 years)	--
Formal Enforcement Actions (5 years)	--
Penalties from Formal Enforcement Actions (5 years)	--
EPA Cases (5 years)	--
Penalties from EPA Cases (5 years)	--

Regulatory Information

Clean Air Act (CAA): No Information

Clean Water Act (CWA): No Information

Resource Conservation and Recovery Act (RCRA): Active VSQG, (PRR000009530)

Safe Drinking Water Act (SDWA): No Information

Other Regulatory Reports

Air Emissions Inventory (EIS): No Information

Greenhouse Gas Emissions (eGGRT): No Information

Toxic Releases (TRI): No Information

Compliance and Emissions Data Reporting Interface (CEDRI): No Information

Go To Enforcement/Compliance Details

Known Data Problems <https://epa.gov/resources/echo-data/known-data-problems>

Facility/System Characteristics

Facility/System Characteristics

System	Statute	Identifier	Universe	Status	Areas	Permit Expiration Date	Indian Country	Latitude	Longitude
FRS		110004894393					N	18.46801	-66.71763
RCRAInfo	RCRA	PRR000009530	VSQG	Active (H)			N	18.469097	-66.716377

Facility Address

System	Statute	Identifier	Facility Name	Facility Address	Facility County
FRS		110004894393	ESSO STANDARD OIL CO - PR CO-117	AVE JUAN ROSADO 253, ARECIBO, PR 00612	Arecibo Municipio
RCRAInfo	RCRA	PRR000009530	ESSO STANDARD OIL CO - PR CO-117	AVE JUAN ROSADO 253, ARECIBO, PR 00612	Arecibo Municipio

Facility SIC (Standard Industrial Classification) Codes

System	Identifier	SIC Code	SIC Description

No data records returned

Facility NAICS (North American Industry Classification System) Codes

System	Identifier	NAICS Code	NAICS Description

No data records returned

Facility Tribe Information

Reservation Name	Tribe Name	EPA Tribal ID	Distance to Tribe (miles)

No data records returned

Enforcement and Compliance

Compliance Monitoring History

Last 5 Years

Statute	Source ID	System	Activity Type	Compliance Monitoring Type	Lead Agency	Date	Finding (if applicable)

No data records returned

Entries in italics are not included in ECHO's Compliance Monitoring Activity counts because they are not compliance monitoring strategy <https://www.epa.gov/compliance/compliance-monitoring-programs> *activities or because they are not counted as inspections within EPA's Annual Results* <https://www.epa.gov/enforcement/enforcement-data-and-results>.

Compliance Summary Data

Statute	Source ID	Current SNC (Significant Noncompliance)/HPV (High Priority Violation)	Current As Of	Qtrs with NC (Noncompliance) (of 12)	Data Last Refreshed
RCRA	PRR000009530	No	08/09/2025	0	08/08/2025

Three-Year Compliance History by Quarter

Statute	Program/Pollutant/Violation Type		QTR 1	QTR 2	QTR 3	QTR 4	QTR 5	QTR 6	QTR 7	QTR 8	QTR 9	QTR 10	QTR 11
RCRA (Source ID: PRR000009530)			10/01-12/31/22	01/01-03/31/23	04/01-06/30/23	07/01-09/30/23	10/01-12/31/23	01/01-03/31/24	04/01-06/30/24	07/01-09/30/24	10/01-12/31/24	01/01-03/31/25	04/01-06/30/25
	Facility-Level Status		No Violation Identified	No Violation Identified	No Violation Identified	No Violation Identified	No Violation Identified	No Violation Identified	No Violation Identified	No Violation Identified	No Violation Identified	No Violation Identified	No Violation Identified
	Violation	Agency											

Informal Enforcement Actions

Last 5 Years

Statute	System	Source ID	Type of Action	Lead Agency	Date

No data records returned

Entries in italics are not counted as "informal enforcement actions" in EPA policies pertaining to enforcement response tools.

Formal Enforcement Actions

Last 5 Years

Statute	System	Law/ Section	Source ID	Type of Action	Case No.	Lead Agency	Case Name	Issued/ Filed Date	Settlements/ Actions	Settlement/ Action Date	Federal Penalty Assessed	State/ Local Penalty Assessed	Penalty Amount Collected	SEP Value	Comp Action Cost

No data records returned

Environmental Conditions

Watersheds

12-Digit WBD (Watershed Boundary Dataset) HUC (RAD (Reach Address Database))	WBD (Watershed Boundary Dataset) Subwatershed Name (RAD (Reach Address Database))	State Water Body Name (ICIS (Integrated Compliance Information System))	Beach Closures Within Last Year	Beach Closures Within Last Two Years	Pollutants Potentially Related to Impairment	Watershed with ESA (Endangered Species Act)-listed Aquatic Species?

No data records returned

Assessed Waters From Latest State Submission (ATTAINS)

State	Report Cycle	Assessment Unit ID	Assessment Unit Name	Water Condition	Cause Groups Impaired	Drinking Water Use	Ecological Use	Fish Consumption Use	Recreation Use	Other Use

No data records returned

Air Quality Nonattainment Areas

Pollutant	Within Nonattainment Status Area?	Nonattainment Status Applicable Standard(s)	Within Maintenance Status Area?	Maintenance Status Applicable Standard(s)
Ozone	No	--	No	--
Lead	Yes	Lead (2008)	No	--
Particulate Matter	No	--	No	--
Carbon Monoxide	No	--	No	--
Sulfur Dioxide	No	--	No	--

Pollutants

Toxics Release Inventory History of Reported Chemicals Released or Transferred in Pounds per Year at Site

TRI Facility ID	Year	Air Emissions	Surface Water Discharges	Off-Site Transfers to POTWs (Publicly Owned Treatment Works)	Underground Injections	Disposal to Land	Total On-Site Releases	Total Off-Site Transfers

No data records returned

Toxics Release Inventory Total Releases and Transfers in Pounds by Chemical and Year

Chemical Name

No data records returned

Community

Demographic Profile of Surrounding Area (1-Mile Radius)

This section provides demographic information regarding the community surrounding the facility. ECHO compliance data alone are not sufficient to determine whether violations at a particular facility had negative impacts on public health or the environment. Statistics are based upon the 2022 American Community Survey (ACS) 5-year Summary and are accurate to the extent that the facility latitude and longitude listed below are correct. Census boundaries and demographic data for U.S. Territories are based on the "2020 Island Areas Demographic Profiles" from the U.S. Census Bureau. EPA's spatial processing methodology considers the overlap between the selected radii and ACS census block groups in determining the demographics surrounding the facility. For more detail about this methodology, see the DFR Data Dictionary <https://epa.gov/help/reports/dfr-data-dictionary#demographic>.

General Statistics (ACS (American Community Survey))	
Total Persons	5,171
Population Density	2,398/sq.mi.
Housing Units in Area	3,187
Percent People of Color	100%
Households in Area	2,160
Households on Public Assistance	192
Persons With Low Income	4,504
Percent With Low Income	88%

Geography	
Radius of Selected Area	1 mi.
Center Latitude	18.46801
Center Longitude	-66.71763
Total Area	3.121 sq.mi.
Land Area	69%
Water Area	31%

Income Breakdown (ACS (American Community Survey)) - Households (%)	
Less than $15,000	1,171 (54.29%)
$15,000 - $25,000	423 (19.61%)
$25,000 - $50,000	384 (17.8%)
$50,000 - $75,000	121 (5.61%)
Greater than $75,000	58 (2.69%)

Age Breakdown (ACS (American Community Survey)) - Persons (%)	
Children 5 years and younger	344 (7%)
Minors 17 years and younger	1,107 (21%)
Adults 18 years and older	4,063 (79%)
Seniors 65 years and older	1,166 (23%)

Race Breakdown (ACS (American Community Survey)) - Persons (%)	
White	1,809 (35%)
African-American	155 (3%)
Hispanic-Origin	5,137 (99%)
Asian	88 (2%)
Hawaiian/Pacific Islander	0 (0%)
American Indian	3 (0%)
Other/Multiracial	1,251 (24%)

Education Level (Persons 25 & older) (ACS (American Community Survey)) - Persons (%)	
Less than 9th Grade	372 (10.36%)
9th through 12th Grade	393 (10.94%)
High School Diploma	1,144 (31.85%)
Some College/2-year	452 (12.58%)
B.S./B.A. (Bachelor of Science/Bachelor of Arts) or More	967 (26.92%)

Detailed Facility Report

Facility Summary

ESSO STANDARD OIL CO - PR CO-118

AVE LUIS LLORENS TORRES 205, ARECIBO, PR 00612

FRS (Facility Registry Service) ID: 110007174477

EPA Region: 02

Latitude: 18.46796

Longitude: -66.71929

Locational Data Source: FRS

Industries: --

Indian Country: N

Enforcement and Compliance Summary

Statute	CAA
Compliance Monitoring Activities (5 years)	--
Date of Last Compliance Monitoring Activity	--
Compliance Status	No Violation Identified
Qtrs in Noncompliance (of 12)	0
Qtrs with Significant Violation	0
Informal Enforcement Actions (5 years)	--
Formal Enforcement Actions (5 years)	--
Penalties from Formal Enforcement Actions (5 years)	--
EPA Cases (5 years)	--
Penalties from EPA Cases (5 years)	--
Statute	**RCRA**
Compliance Monitoring Activities (5 years)	--
Date of Last Compliance Monitoring Activity	--
Compliance Status	No Violation Identified
Qtrs in Noncompliance (of 12)	0
Qtrs with Significant Violation	0
Informal Enforcement Actions (5 years)	--
Formal Enforcement Actions (5 years)	--
Penalties from Formal Enforcement Actions (5 years)	--
EPA Cases (5 years)	--
Penalties from EPA Cases (5 years)	--

Regulatory Information

Clean Air Act (CAA): Operating Minor (PR0000007201300080)

Clean Water Act (CWA): No Information

Other Regulatory Reports

Air Emissions Inventory (EIS): No Information

Greenhouse Gas Emissions (eGGRT): No Information

Resource Conservation and Recovery Act (RCRA): Inactive Other, (PRR000003301)

Safe Drinking Water Act (SDWA): No Information

Toxic Releases (TRI): No Information

Compliance and Emissions Data Reporting Interface (CEDRI): No Information

Go To Enforcement/Compliance Details
Known Data Problems <https://epa.gov/resources/echo-data/known-data-problems>

Facility/System Characteristics

Facility/System Characteristics

System	Statute	Identifier	Universe	Status	Areas	Permit Expiration Date	Indian Country	Latitude	Longitude
FRS		110007174477					N	18.46796	-66.71929
ICIS-Air	CAA	PR0000007201300080	Minor Emissions	Operating	CAACFC		N	18.469042	-66.720643
RCRAInfo	RCRA	PRR000003301	Other	Inactive ( )			N	18.469042	-66.720643

Facility Address

System	Statute	Identifier	Facility Name	Facility Address	Facility County
FRS		110007174477	ESSO STANDARD OIL CO - PR CO-118	AVE LUIS LLORENS TORRES 205, ARECIBO, PR 00612	Arecibo Municipio
ICIS-Air	CAA	PR0000007201300080	TONY'S ESSO SERVICE CENTER	AVENIDA LUIS LLORENS TORRES205, ARECIBO, PR 00612	Arecibo Municipio
RCRAInfo	RCRA	PRR000003301	ESSO STANDARD OIL CO - PR CO-118	AVE LLORENS TORRES, ARECIBO, PR 00612	Arecibo Municipio

Facility SIC (Standard Industrial Classification) Codes

System	Identifier	SIC Code	SIC Description
ICIS-Air	PR0000007201300080	5013	Motor Vehicle Supplies And New Parts

Facility NAICS (North American Industry Classification System) Codes

System	Identifier	NAICS Code	NAICS Description
ICIS-Air	PR0000007201300080	999999	

Facility Tribe Information

Reservation Name	Tribe Name	EPA Tribal ID	Distance to Tribe (miles)

No data records returned

Enforcement and Compliance

Compliance Monitoring History

Last 5 Years

Statute	Source ID	System	Activity Type	Compliance Monitoring Type	Lead Agency	Date	Finding (if applicable)

No data records returned

Entries in italics are not included in ECHO's Compliance Monitoring Activity counts because they are not compliance monitoring strategy <https://www.epa.gov/compliance/compliance-monitoring-programs> *activities or because they are not counted as inspections within EPA's Annual Results* <https://www.epa.gov/enforcement/enforcement-data-and-results>.

Compliance Summary Data

Statute	Source ID	Current SNC (Significant Noncompliance)/HPV (High Priority Violation)	Current As Of	Qtrs with NC (Noncompliance) (of 12)	Data Last Refreshed
CAA	PR0000007201300080	No	08/09/2025	0	08/08/2025
RCRA	PRR000003301	No	08/09/2025	0	08/08/2025

Three-Year Compliance History by Quarter

Statute	Program/Pollutant/Violation Type	QTR 1	QTR 2	QTR 3	QTR 4	QTR 5	QTR 6	QTR 7	QTR 8	QTR 9	QTR 10	
CAA (Source ID: PR0000007201300080)		10/01-12/31/22	01/01-03/31/23	04/01-06/30/23	07/01-09/30/23	10/01-12/31/23	01/01-03/31/24	04/01-06/30/24	07/01-09/30/24	10/01-12/31/24	01/01-03/31/25	04/0
	Facility-Level Status	No Violation Identified	No Violation Identified	No Violation Identified	No Violation Identified	No Violation Identified	No Violation Identified	No Violation Identified	No Violation Identified	No Violation Identified	No Violation Identified	No I
	HPV History											
	Violation Type / Agency / Programs / Pollutants											

Statute	Program/Pollutant/Violation Type	QTR 1	QTR 2	QTR 3	QTR 4	QTR 5	QTR 6	QTR 7	QTR 8	QTR 9	QTR 10	QTR 11
RCRA (Source ID: PRR000003301)		10/01-12/31/22	01/01-03/31/23	04/01-06/30/23	07/01-09/30/23	10/01-12/31/23	01/01-03/31/24	04/01-06/30/24	07/01-09/30/24	10/01-12/31/24	01/01-03/31/25	04/01-06/30/25
	Facility-Level Status	No Violation Identified	No Violation Identified	No Violation Identified	No Violation Identified	No Violation Identified	No Violation Identified	No Violation Identified	No Violation Identified	No Violation Identified	No Violation Identified	No Violation Identified
	Violation / Agency											

Informal Enforcement Actions

Last 5 Years

Statute	System	Source ID	Type of Action	Lead Agency	Date

No data records returned

Entries in italics are not counted as "informal enforcement actions" in EPA policies pertaining to enforcement response tools.

Formal Enforcement Actions

Last 5 Years

Statute	System	Law/ Section	Source ID	Type of Action	Case No.	Lead Agency	Case Name	Issued/ Filed Date	Settlements/ Actions	Settlement/ Action Date	Federal Penalty Assessed	State/ Local Penalty Assessed	Penalty Amount Collected	SEP Value	Comp Action Cost

No data records returned

Environmental Conditions

Watersheds

12-Digit WBD (Watershed Boundary Dataset) HUC (RAD (Reach Address Database))	WBD (Watershed Boundary Dataset) Subwatershed Name (RAD (Reach Address Database))	State Water Body Name (ICIS (Integrated Compliance Information System))	Beach Closures Within Last Year	Beach Closures Within Last Two Years	Pollutants Potentially Related to Impairment	Watershed with ESA (Endangered Species Act)-listed Aquatic Species?

No data records returned

Assessed Waters From Latest State Submission (ATTAINS)

State	Report Cycle	Assessment Unit ID	Assessment Unit Name	Water Condition	Cause Groups Impaired	Drinking Water Use	Ecological Use	Fish Consumption Use	Recreation Use	Other Use

No data records returned

Air Quality Nonattainment Areas

Pollutant	Within Nonattainment Status Area?	Nonattainment Status Applicable Standard(s)	Within Maintenance Status Area?	Maintenance Status Applicable Standard(s)
Ozone	No	--	No	--
Lead	Yes	Lead (2008)	No	--
Particulate Matter	No	--	No	--
Carbon Monoxide	No	--	No	--
Sulfur Dioxide	No	--	No	--

Pollutants

Toxics Release Inventory History of Reported Chemicals Released or Transferred in Pounds per Year at Site

TRI Facility ID	Year	Air Emissions	Surface Water Discharges	Off-Site Transfers to POTWs (Publicly Owned Treatment Works)	Underground Injections	Disposal to Land	Total On-Site Releases	Total Off-Site Transfers

No data records returned

Toxics Release Inventory Total Releases and Transfers in Pounds by Chemical and Year

Chemical Name

No data records returned

Community

Demographic Profile of Surrounding Area (1-Mile Radius)

This section provides demographic information regarding the community surrounding the facility. ECHO compliance data alone are not sufficient to determine whether violations at a particular facility had negative impacts on public health or the environment. Statistics are based upon the 2022 American Community Survey (ACS) 5-year Summary and are accurate to the extent that the facility latitude and longitude listed below are correct. Census boundaries and demographic data for U.S. Territories are based on the "2020 Island Areas Demographic Profiles" from the U.S. Census Bureau. EPA's spatial processing methodology considers the overlap between the selected radii and ACS census block groups in determining the demographics surrounding the facility. For more detail about this methodology, see the DFR Data Dictionary <https://epa.gov/help/reports/dfr-data-dictionary#demographic>.

General Statistics (ACS (American Community Survey))	
Total Persons	6,287
Population Density	2,890/sq.mi.

Age Breakdown (ACS (American Community Survey)) - Persons (%)	
Children 5 years and younger	413 (7%)
Minors 17 years and younger	1,397 (22%)

General Statistics (ACS (American Community Survey))	
Housing Units in Area	3,778
Percent People of Color	100%
Households in Area	2,625
Households on Public Assistance	221
Persons With Low Income	5,493
Percent With Low Income	89%
Geography	
Radius of Selected Area	1 mi.
Center Latitude	18.46796
Center Longitude	-66.71929
Total Area	3.121 sq.mi.
Land Area	70%
Water Area	30%

Income Breakdown (ACS (American Community Survey)) - Households (%)	
Less than $15,000	1,463 (55.71%)
$15,000 - $25,000	494 (18.81%)
$25,000 - $50,000	468 (17.82%)
$50,000 - $75,000	138 (5.26%)
Greater than $75,000	63 (2.4%)

Age Breakdown (ACS (American Community Survey)) - Persons (%)	
Adults 18 years and older	4,890 (78%)
Seniors 65 years and older	1,387 (22%)
Race Breakdown (ACS (American Community Survey)) - Persons (%)	
White	2,189 (35%)
African-American	168 (3%)
Hispanic-Origin	6,238 (99%)
Asian	111 (2%)
Hawaiian/Pacific Islander	0 (0%)
American Indian	2 (0%)
Other/Multiracial	1,515 (24%)

Education Level (Persons 25 & older) (ACS (American Community Survey)) - Persons (%)	
Less than 9th Grade	501 (11.5%)
9th through 12th Grade	465 (10.68%)
High School Diploma	1,443 (33.13%)
Some College/2-year	512 (11.76%)
B.S./B.A. (Bachelor of Science/Bachelor of Arts) or More	1,102 (25.3%)

Detailed Facility Report

Facility Summary

HOSPITAL METROPOLITANO DR SUSONI

55 CALLE PALMA, ARECIBO, PR 00614

FRS (Facility Registry Service) ID: 110037441408

EPA Region: 02

Latitude: 18.47312

Longitude: -66.71655

Locational Data Source: FRS

Industries: Hospitals

Indian Country: N

Enforcement and Compliance Summary

Statute	RCRA
Compliance Monitoring Activities (5 years)	--
Date of Last Compliance Monitoring Activity	12/18/2012
Compliance Status	No Violation Identified
Qtrs in Noncompliance (of 12)	0
Qtrs with Significant Violation	0
Informal Enforcement Actions (5 years)	--
Formal Enforcement Actions (5 years)	--
Penalties from Formal Enforcement Actions (5 years)	--
EPA Cases (5 years)	--
Penalties from EPA Cases (5 years)	--

Regulatory Information

Clean Air Act (CAA): No Information

Clean Water Act (CWA): No Information

Resource Conservation and Recovery Act (RCRA): Active SQG, (PRR000021790)

Safe Drinking Water Act (SDWA): No Information

Other Regulatory Reports

Air Emissions Inventory (EIS): No Information

Greenhouse Gas Emissions (eGGRT): No Information

Toxic Releases (TRI): No Information

Compliance and Emissions Data Reporting Interface (CEDRI): No Information

Go To Enforcement/Compliance Details

Known Data Problems <https://epa.gov/resources/echo-data/known-data-problems>

Facility/System Characteristics

Facility/System Characteristics

System	Statute	Identifier	Universe	Status	Areas	Permit Expiration Date	Indian Country	Latitude	Longitude
FRS		110037441408					N	18.47312	-66.71655
RCRAInfo	RCRA	PRR000021790	SQG	Active (H)			N	18.471942	-66.71738

Facility Address

System	Statute	Identifier	Facility Name	Facility Address	Facility County
FRS		110037441408	HOSPITAL METROPOLITANO DR SUSONI	55 CALLE PALMA, ARECIBO, PR 00614	Arecibo Municipio

System	Statute	Identifier	Facility Name	Facility Address	Facility County
RCRAInfo	RCRA	PRR000021790	HOSPITAL METROPOLITANO DR SUSONI	55 PALMA ST, ARECIBO, PR 00612	Arecibo Municipio

Facility SIC (Standard Industrial Classification) Codes

System	Identifier	SIC Code	SIC Description

No data records returned

Facility NAICS (North American Industry Classification System) Codes

System	Identifier	NAICS Code	NAICS Description
RCRAInfo	PRR000021790	622110	General Medical and Surgical Hospitals

Facility Tribe Information

Reservation Name	Tribe Name	EPA Tribal ID	Distance to Tribe (miles)

No data records returned

Enforcement and Compliance

Compliance Monitoring History

Last 5 Years

Statute	Source ID	System	Activity Type	Compliance Monitoring Type	Lead Agency	Date	Finding (if applicable)

No data records returned

Entries in italics are not included in ECHO's Compliance Monitoring Activity counts because they are not compliance monitoring strategy <https://www.epa.gov/compliance/compliance-monitoring-programs> *activities or because they are not counted as inspections within EPA's Annual Results* <https://www.epa.gov/enforcement/enforcement-data-and-results>.

Compliance Summary Data

Statute	Source ID	Current SNC (Significant Noncompliance)/HPV (High Priority Violation)	Current As Of	Qtrs with NC (Noncompliance) (of 12)	Data Last Refreshed
RCRA	PRR000021790	No	08/09/2025	0	08/08/2025

Three-Year Compliance History by Quarter

Statute	Program/Pollutant/Violation Type		QTR 1	QTR 2	QTR 3	QTR 4	QTR 5	QTR 6	QTR 7	QTR 8	QTR 9	QTR 10	QTR 11
RCRA (Source ID: PRR000021790)			10/01-12/31/22	01/01-03/31/23	04/01-06/30/23	07/01-09/30/23	10/01-12/31/23	01/01-03/31/24	04/01-06/30/24	07/01-09/30/24	10/01-12/31/24	01/01-03/31/25	04/01-06/30/25
	Facility-Level Status		No Violation Identified	No Violation Identified	No Violation Identified	No Violation Identified	No Violation Identified	No Violation Identified	No Violation Identified	No Violation Identified	No Violation Identified	No Violation Identified	No Violation Identified
	Violation	Agency											

Informal Enforcement Actions

Last 5 Years

Statute	System	Source ID	Type of Action	Lead Agency	Date

No data records returned

Entries in italics are not counted as "informal enforcement actions" in EPA policies pertaining to enforcement response tools.

Formal Enforcement Actions

Last 5 Years

Statute	System	Law/ Section	Source ID	Type of Action	Case No.	Lead Agency	Case Name	Issued/ Filed Date	Settlements/ Actions	Settlement/ Action Date	Federal Penalty Assessed	State/ Local Penalty Assessed	Penalty Amount Collected	SEP Value	Comp Action Cost

No data records returned

Environmental Conditions

Watersheds

12-Digit WBD (Watershed Boundary Dataset) HUC (RAD (Reach Address Database))	WBD (Watershed Boundary Dataset) Subwatershed Name (RAD (Reach Address Database))	State Water Body Name (ICIS (Integrated Compliance Information System))	Beach Closures Within Last Year	Beach Closures Within Last Two Years	Pollutants Potentially Related to Impairment	Watershed with ESA (Endangered Species Act)-listed Aquatic Species?

No data records returned

Assessed Waters From Latest State Submission (ATTAINS)

State	Report Cycle	Assessment Unit ID	Assessment Unit Name	Water Condition	Cause Groups Impaired	Drinking Water Use	Ecological Use	Fish Consumption Use	Recreation Use	Other Use

No data records returned

Air Quality Nonattainment Areas

Pollutant	Within Nonattainment Status Area?	Nonattainment Status Applicable Standard(s)	Within Maintenance Status Area?	Maintenance Status Applicable Standard(s)
Ozone	No	--	No	--
Lead	Yes	Lead (2008)	No	--
Particulate Matter	No	--	No	--
Carbon Monoxide	No	--	No	--
Sulfur Dioxide	No	--	No	--

Pollutants

Toxics Release Inventory History of Reported Chemicals Released or Transferred in Pounds per Year at Site

TRI Facility ID	Year	Air Emissions	Surface Water Discharges	Off-Site Transfers to POTWs (Publicly Owned Treatment Works)	Underground Injections	Disposal to Land	Total On-Site Releases	Total Off-Site Transfers

No data records returned

Toxics Release Inventory Total Releases and Transfers in Pounds by Chemical and Year

Chemical Name

No data records returned

Community

Demographic Profile of Surrounding Area (1-Mile Radius)

This section provides demographic information regarding the community surrounding the facility. ECHO compliance data alone are not sufficient to determine whether violations at a particular facility had negative impacts on public health or the environment. Statistics are based upon the 2022 American Community Survey (ACS) 5-year Summary and are accurate to the extent that the facility latitude and longitude listed below are correct. Census boundaries and demographic data for U.S. Territories are based on the "2020 Island Areas Demographic Profiles" from the U.S. Census Bureau. EPA's spatial processing methodology considers the overlap between the selected radii and ACS census block groups in determining the demographics surrounding the facility. For more detail about this methodology, see the DFR Data Dictionary <https://epa.gov/help/reports/dfr-data-dictionary#demographic>.

General Statistics (ACS (American Community Survey))	
Total Persons	3,051
Population Density	1,967/sq.mi.
Housing Units in Area	2,131
Percent People of Color	100%
Households in Area	1,301
Households on Public Assistance	99
Persons With Low Income	2,565
Percent With Low Income	86%

Geography	
Radius of Selected Area	1 mi.
Center Latitude	18.47312
Center Longitude	-66.71655
Total Area	3.121 sq.mi.
Land Area	50%
Water Area	50%

Income Breakdown (ACS (American Community Survey)) - Households (%)	
Less than $15,000	620 (47.69%)
$15,000 - $25,000	273 (21%)
$25,000 - $50,000	277 (21.31%)
$50,000 - $75,000	89 (6.85%)
Greater than $75,000	41 (3.15%)

Age Breakdown (ACS (American Community Survey)) - Persons (%)	
Children 5 years and younger	150 (5%)
Minors 17 years and younger	531 (17%)
Adults 18 years and older	2,520 (83%)
Seniors 65 years and older	816 (27%)

Race Breakdown (ACS (American Community Survey)) - Persons (%)	
White	1,117 (37%)
African-American	109 (4%)
Hispanic-Origin	3,041 (100%)
Asian	62 (2%)
Hawaiian/Pacific Islander	0 (0%)
American Indian	2 (0%)
Other/Multiracial	655 (21%)

Education Level (Persons 25 & older) (ACS (American Community Survey)) - Persons (%)	
Less than 9th Grade	207 (9.15%)
9th through 12th Grade	219 (9.68%)
High School Diploma	659 (29.13%)
Some College/2-year	285 (12.6%)
B.S./B.A. (Bachelor of Science/Bachelor of Arts) or More	711 (31.43%)

Detailed Facility Report

Facility Summary

MUNICIPALITY OF ARECIBO

100 AVENIDA JOSE DE DIEGO, ARECIBO, PR 00612

FRS (Facility Registry Service) ID: 110035859808

EPA Region: 02

Latitude: 18.47223

Longitude: -66.71642

Locational Data Source: FRS

Industries: --

Indian Country: N

Enforcement and Compliance Summary

Statute	CWA
Compliance Monitoring Activities (5 years)	--
Date of Last Compliance Monitoring Activity	10/31/2019
Compliance Status	Not Applicable
Qtrs in Noncompliance (of 12)	0
Qtrs with Significant Violation	0
Informal Enforcement Actions (5 years)	--
Formal Enforcement Actions (5 years)	--
Penalties from Formal Enforcement Actions (5 years)	--
EPA Cases (5 years)	--
Penalties from EPA Cases (5 years)	--

Regulatory Information

Clean Air Act (CAA): No Information

Clean Water Act (CWA): Non-Major, (PRU201961)

Resource Conservation and Recovery Act (RCRA): No Information

Safe Drinking Water Act (SDWA): No Information

Other Regulatory Reports

Air Emissions Inventory (EIS): No Information

Greenhouse Gas Emissions (eGGRT): No Information

Toxic Releases (TRI): No Information

Compliance and Emissions Data Reporting Interface (CEDRI): No Information

Go To Enforcement/Compliance Details

Known Data Problems <https://epa.gov/resources/echo-data/known-data-problems>

Facility/System Characteristics

Facility/System Characteristics

System	Statute	Identifier	Universe	Status	Areas	Permit Expiration Date	Indian Country	Latitude	Longitude
FRS		110035859808					N	18.47223	-66.71642
ICIS-NPDES	CWA	PRU201961	Non-Major: Unpermitted Facility				N	18.47226	-66.71851

Facility Address

System	Statute	Identifier	Facility Name	Facility Address	Facility County
FRS		110035859808	MUNICIPALITY OF ARECIBO	100 AVENIDA JOSE DE DIEGO, ARECIBO, PR 00612	Arecibo Municipio

System	Statute	Identifier	Facility Name	Facility Address	Facility County
ICIS-NPDES	CWA	PRU201961	MUNICIPALITY OF ARECIBO	CALLE JOSE DE DIEGO # 100, ARECIBO, PR 00613	Arecibo Municipio

Facility SIC (Standard Industrial Classification) Codes

System	Identifier	SIC Code	SIC Description

No data records returned

Facility NAICS (North American Industry Classification System) Codes

System	Identifier	NAICS Code	NAICS Description

No data records returned

Facility Industrial Effluent Guidelines

Identifier	Effluent Guideline (40 CFR Part)	Effluent Guideline Description

No data records returned

Facility Tribe Information

Reservation Name	Tribe Name	EPA Tribal ID	Distance to Tribe (miles)

No data records returned

Enforcement and Compliance

Compliance Monitoring History

Last 5 Years

Statute	Source ID	System	Activity Type	Compliance Monitoring Type	Lead Agency	Date	Finding (if applicable)

No data records returned

Entries in italics are not included in ECHO's Compliance Monitoring Activity counts because they are not compliance monitoring strategy <https://www.epa.gov/compliance/compliance-monitoring-programs> *activities or because they are not counted as inspections within EPA's Annual Results* <https://www.epa.gov/enforcement/enforcement-data-and-results>.

Compliance Summary Data

Statute	Source ID	Current SNC (Significant Noncompliance)/HPV (High Priority Violation)	Current As Of	Qtrs with NC (Noncompliance) (of 12)	Data Last Refreshed
CWA	PRU201961	No	03/31/2025	0	08/08/2025

Three-Year Compliance History by Quarter

Statute	Program/Pollutant/Violation Type	QTR 1	QTR 2	QTR 3	QTR 4	QTR 5	QTR 6	QTR 7	QTR 8	QTR 9	QTR 10	QTR 11
CWA (Source ID: PRU201961)		04/01-06/30/22	07/01-09/30/22	10/01-12/31/22	01/01-03/31/23	04/01-06/30/23	07/01-09/30/23	10/01-12/31/23	01/01-03/31/24	04/01-06/30/24	07/01-09/30/24	10/01-12/31/24
	Facility-Level Status	Not Applicable	Not Applicable	Not Applicable	Not Applicable	Not Applicable	Not Applicable	Not Applicable	Not Applicable	Not Applicable	Not Applicable	Not Applicable
	Quarterly Noncompliance Report History											

Informal Enforcement Actions

Last 5 Years

Statute	System	Source ID	Type of Action	Lead Agency	Date

No data records returned

Entries in italics are not counted as "informal enforcement actions" in EPA policies pertaining to enforcement response tools.

Formal Enforcement Actions

Last 5 Years

Statute	System	Law/ Section	Source ID	Type of Action	Case No.	Lead Agency	Case Name	Issued/ Filed Date	Settlements/ Actions	Settlement/ Action Date	Federal Penalty Assessed	State/ Local Penalty Assessed	Penalty Amount Collected	SEP Value	Comp Action Cost

No data records returned

Environmental Conditions

Watersheds

12-Digit WBD (Watershed Boundary Dataset) HUC (RAD (Reach Address Database))	WBD (Watershed Boundary Dataset) Subwatershed Name (RAD (Reach Address Database))	State Water Body Name (ICIS (Integrated Compliance Information System))	Beach Closures Within Last Year	Beach Closures Within Last Two Years	Pollutants Potentially Related to Impairment	Watershed with ESA (Endangered Species Act)-listed Aquatic Species?
210100020414	Rio Grande de Arecibo at mouth	--	No	No	--	Yes

Assessed Waters From Latest State Submission (ATTAINS)

State	Report Cycle	Assessment Unit ID	Assessment Unit Name	Water Condition	Cause Groups Impaired	Drinking Water Use	Ecological Use	Fish Consumption Use	Recreation Use	Other Use
PR	2024	PRNR7A1a	RIO SANTIAGO	Impaired - With Restoration Plan	PATHOGENS	Not Assessed	Insufficient Information	--	Not Supporting	--

Air Quality Nonattainment Areas

Pollutant	Within Nonattainment Status Area?	Nonattainment Status Applicable Standard(s)	Within Maintenance Status Area?	Maintenance Status Applicable Standard(s)
Ozone	No	--	No	--
Lead	Yes	Lead (2008)	No	--
Particulate Matter	No	--	No	--
Carbon Monoxide	No	--	No	--
Sulfur Dioxide	No	--	No	--

Pollutants

Toxics Release Inventory History of Reported Chemicals Released or Transferred in Pounds per Year at Site

TRI Facility ID	Year	Air Emissions	Surface Water Discharges	Off-Site Transfers to POTWs (Publicly Owned Treatment Works)	Underground Injections	Disposal to Land	Total On-Site Releases	Total Off-Site Transfers

No data records returned

Toxics Release Inventory Total Releases and Transfers in Pounds by Chemical and Year

Chemical Name

No data records returned

CWA (Clean Water Act) Discharge Monitoring Report (DMR) Pollutant Loadings

DMR and TRI Multi-Year Loading Report

NPDES ID	Description

No data records returned

Community

Demographic Profile of Surrounding Area (1-Mile Radius)

This section provides demographic information regarding the community surrounding the facility. ECHO compliance data alone are not sufficient to determine whether violations at a particular facility had negative impacts on public health or the environment. Statistics are based upon the 2022 American Community Survey (ACS) 5-year Summary and are accurate to the extent that the facility latitude and longitude listed below are correct. Census boundaries and demographic data for U.S. Territories are based on the "2020 Island Areas Demographic Profiles" from the U.S. Census Bureau. EPA's spatial processing methodology considers the overlap between the selected radii and ACS census block groups in determining the demographics surrounding the facility. For more detail about this methodology, see the DFR Data Dictionary <https://epa.gov/help/reports/dfr-data-dictionary#demographic>.

General Statistics (ACS (American Community Survey))	
Total Persons	3,334
Population Density	2,007/sq.mi.
Housing Units in Area	2,262
Percent People of Color	100%
Households in Area	1,413
Households on Public Assistance	116
Persons With Low Income	2,830
Percent With Low Income	86%

Geography	
Radius of Selected Area	1 mi.
Center Latitude	18.47223
Center Longitude	-66.71642
Total Area	3.121 sq.mi.
Land Area	53%
Water Area	47%

Income Breakdown (ACS (American Community Survey)) - Households (%)	
Less than $15,000	698 (49.33%)
$15,000 - $25,000	294 (20.78%)
$25,000 - $50,000	286 (20.21%)
$50,000 - $75,000	94 (6.64%)
Greater than $75,000	43 (3.04%)

Age Breakdown (ACS (American Community Survey)) - Persons (%)	
Children 5 years and younger	177 (5%)
Minors 17 years and younger	618 (19%)
Adults 18 years and older	2,716 (81%)
Seniors 65 years and older	853 (26%)

Race Breakdown (ACS (American Community Survey)) - Persons (%)	
White	1,213 (36%)
African-American	115 (3%)
Hispanic-Origin	3,319 (100%)
Asian	64 (2%)
Hawaiian/Pacific Islander	0 (0%)
American Indian	2 (0%)
Other/Multiracial	736 (22%)

Education Level (Persons 25 & older) (ACS (American Community Survey)) - Persons (%)	
Less than 9th Grade	221 (9.12%)
9th through 12th Grade	241 (9.95%)
High School Diploma	727 (30.02%)
Some College/2-year	304 (12.55%)
B.S./B.A. (Bachelor of Science/Bachelor of Arts) or More	739 (30.51%)

Detailed Facility Report

Facility Summary

NC TRANSMITION PARTS

150 JUAN ROSADO AVE, ARECIBO, PR 00612

FRS (Facility Registry Service) ID: 110004890315

EPA Region: 02

Latitude: 18.469379

Longitude: -66.716114

Locational Data Source: FRS

Industries: Repair and Maintenance

Indian Country: N

Enforcement and Compliance Summary

Statute	RCRA
Compliance Monitoring Activities (5 years)	--
Date of Last Compliance Monitoring Activity	08/11/2009
Compliance Status	No Violation Identified
Qtrs in Noncompliance (of 12)	0
Qtrs with Significant Violation	0
Informal Enforcement Actions (5 years)	--
Formal Enforcement Actions (5 years)	--
Penalties from Formal Enforcement Actions (5 years)	--
EPA Cases (5 years)	--
Penalties from EPA Cases (5 years)	--

Regulatory Information

Clean Air Act (CAA): No Information

Clean Water Act (CWA): No Information

Resource Conservation and Recovery Act (RCRA): Active VSQG, (PRD987381076)

Safe Drinking Water Act (SDWA): No Information

Other Regulatory Reports

Air Emissions Inventory (EIS): No Information

Greenhouse Gas Emissions (eGGRT): No Information

Toxic Releases (TRI): No Information

Compliance and Emissions Data Reporting Interface (CEDRI): No Information

Go To Enforcement/Compliance Details

Known Data Problems <https://epa.gov/resources/echo-data/known-data-problems>

Facility/System Characteristics

Facility/System Characteristics

System	Statute	Identifier	Universe	Status	Areas	Permit Expiration Date	Indian Country	Latitude	Longitude
FRS		110004890315					N	18.469379	-66.716114
RCRAInfo	RCRA	PRD987381076	VSQG	Active (H)			N	18.469964	-66.715434

Facility Address

System	Statute	Identifier	Facility Name	Facility Address	Facility County
FRS		110004890315	NC TRANSMITION PARTS	150 JUAN ROSADO AVE, ARECIBO, PR 00612	Arecibo Municipio
RCRAInfo	RCRA	PRD987381076	NC TRANSMITION PARTS	150 JUAN ROSADO AVE, ARECIBO, PR 00612	Arecibo Municipio

Facility SIC (Standard Industrial Classification) Codes

System	Identifier	SIC Code	SIC Description

No data records returned

Facility NAICS (North American Industry Classification System) Codes

System	Identifier	NAICS Code	NAICS Description
RCRAInfo	PRD987381076	81119	Other Automotive Repair and Maintenance

Facility Tribe Information

Reservation Name	Tribe Name	EPA Tribal ID	Distance to Tribe (miles)

No data records returned

Enforcement and Compliance

Compliance Monitoring History

Last 5 Years

Statute	Source ID	System	Activity Type	Compliance Monitoring Type	Lead Agency	Date	Finding (if applicable)

No data records returned

Entries in italics are not included in ECHO's Compliance Monitoring Activity counts because they are not compliance monitoring strategy <https://www.epa.gov/compliance/compliance-monitoring-programs> *activities or because they are not counted as inspections within EPA's Annual Results* <https://www.epa.gov/enforcement/enforcement-data-and-results>.

Compliance Summary Data

Statute	Source ID	Current SNC (Significant Noncompliance)/HPV (High Priority Violation)	Current As Of	Qtrs with NC (Noncompliance) (of 12)	Data Last Refreshed
RCRA	PRD987381076	No	08/09/2025	0	08/08/2025

Three-Year Compliance History by Quarter

Statute	Program/Pollutant/Violation Type		QTR 1	QTR 2	QTR 3	QTR 4	QTR 5	QTR 6	QTR 7	QTR 8	QTR 9	QTR 10	QTR 11
RCRA (Source ID: PRD987381076)			10/01-12/31/22	01/01-03/31/23	04/01-06/30/23	07/01-09/30/23	10/01-12/31/23	01/01-03/31/24	04/01-06/30/24	07/01-09/30/24	10/01-12/31/24	01/01-03/31/25	04/01-06/30/25
	Facility-Level Status		No Violation Identified	No Violation Identified	No Violation Identified	No Violation Identified	No Violation Identified	No Violation Identified	No Violation Identified	No Violation Identified	No Violation Identified	No Violation Identified	No Violation Identified
	Violation	Agency											

Informal Enforcement Actions

Last 5 Years

Statute	System	Source ID	Type of Action	Lead Agency	Date

No data records returned

Entries in italics are not counted as "informal enforcement actions" in EPA policies pertaining to enforcement response tools.

Formal Enforcement Actions

Last 5 Years

Statute	System	Law/ Section	Source ID	Type of Action	Case No.	Lead Agency	Case Name	Issued/ Filed Date	Settlements/ Actions	Settlement/ Action Date	Federal Penalty Assessed	State/ Local Penalty Assessed	Penalty Amount Collected	SEP Value	Comp Action Cost

No data records returned

Environmental Conditions

Watersheds

12-Digit WBD (Watershed Boundary Dataset) HUC (RAD (Reach Address Database))	WBD (Watershed Boundary Dataset) Subwatershed Name (RAD (Reach Address Database))	State Water Body Name (ICIS (Integrated Compliance Information System))	Beach Closures Within Last Year	Beach Closures Within Last Two Years	Pollutants Potentially Related to Impairment	Watershed with ESA (Endangered Species Act)-listed Aquatic Species?

No data records returned

Assessed Waters From Latest State Submission (ATTAINS)

State	Report Cycle	Assessment Unit ID	Assessment Unit Name	Water Condition	Cause Groups Impaired	Drinking Water Use	Ecological Use	Fish Consumption Use	Recreation Use	Other Use

No data records returned

Air Quality Nonattainment Areas

Pollutant	Within Nonattainment Status Area?	Nonattainment Status Applicable Standard(s)	Within Maintenance Status Area?	Maintenance Status Applicable Standard(s)
Ozone	No	--	No	--
Lead	Yes	Lead (2008)	No	--
Particulate Matter	No	--	No	--
Carbon Monoxide	No	--	No	--
Sulfur Dioxide	No	--	No	--

Pollutants

Toxics Release Inventory History of Reported Chemicals Released or Transferred in Pounds per Year at Site

TRI Facility ID	Year	Air Emissions	Surface Water Discharges	Off-Site Transfers to POTWs (Publicly Owned Treatment Works)	Underground Injections	Disposal to Land	Total On-Site Releases	Total Off-Site Transfers

No data records returned

Toxics Release Inventory Total Releases and Transfers in Pounds by Chemical and Year

Chemical Name

No data records returned

e-Manifest Hazardous Waste History (Public)

Hazardous Waste Shipped in Kilograms by Year (Through 5/10/2025)

Source ID	Waste Description	2022	2023	2024	2025
PRD987381076	Hazardous Waste	965	1,135	832	605
PRD987381076	Acute Hazardous Waste	0	0	0	0
PRD987381076	Pharmaceutical Hazardous Waste	0	0	0	0

“Pharmaceutical Hazardous Waste” refers to quantities managed under 40 CFR part 266 subpart P and thus excluded from the Hazardous and Acute Hazardous Waste quantities shown above.

Community

Demographic Profile of Surrounding Area (1-Mile Radius)

This section provides demographic information regarding the community surrounding the facility. ECHO compliance data alone are not sufficient to determine whether violations at a particular facility had negative impacts on public health or the environment. Statistics are based upon the 2022 American Community Survey (ACS) 5-year Summary and are accurate to the extent that the facility latitude and longitude listed below are correct. Census boundaries and demographic data for U.S. Territories are based on the "2020 Island Areas Demographic Profiles" from the U.S. Census Bureau. EPA’s spatial processing methodology considers the overlap between the selected radii and ACS census block groups in determining the demographics surrounding the facility. For more detail about this methodology, see the DFR Data Dictionary <https://epa.gov/help/reports/dfr-data-dictionary#demographic>.

General Statistics (ACS (American Community Survey))	
Total Persons	4,112
Population Density	2,055/sq.mi.
Housing Units in Area	2,629
Percent People of Color	100%
Households in Area	1,718
Households on Public Assistance	158
Persons With Low Income	3,547
Percent With Low Income	88%

Geography	
Radius of Selected Area	1 mi.
Center Latitude	18.469379
Center Longitude	-66.716114
Total Area	3.121 sq.mi.
Land Area	64%
Water Area	36%

Age Breakdown (ACS (American Community Survey)) - Persons (%)	
Children 5 years and younger	253 (6%)
Minors 17 years and younger	845 (21%)
Adults 18 years and older	3,267 (79%)
Seniors 65 years and older	962 (23%)

Race Breakdown (ACS (American Community Survey)) - Persons (%)	
White	1,469 (36%)
African-American	134 (3%)
Hispanic-Origin	4,086 (99%)
Asian	68 (2%)
Hawaiian/Pacific Islander	0 (0%)
American Indian	3 (0%)
Other/Multiracial	967 (24%)

Education Level (Persons 25 & older) (ACS (American Community Survey)) - Persons (%)	
Less than 9th Grade	259 (9.01%)
9th through 12th Grade	304 (10.57%)

Income Breakdown (ACS (American Community Survey)) - Households (%)	
Less than $15,000	890 (51.9%)
$15,000 - $25,000	354 (20.64%)
$25,000 - $50,000	318 (18.54%)
$50,000 - $75,000	105 (6.12%)
Greater than $75,000	48 (2.8%)

Education Level (Persons 25 & older) (ACS (American Community Survey)) - Persons (%)	
High School Diploma	909 (31.61%)
Some College/2-year	369 (12.83%)
B.S./B.A. (Bachelor of Science/Bachelor of Arts) or More	824 (28.65%)

Detailed Facility Report

Facility Summary

PRASA ARECIBO REGIONAL OFFICE

CAPITAN ABREU ST, ARECIBO, PR 00612

FRS (Facility Registry Service) ID: 110007810547

EPA Region: 02

Latitude: 18.471475

Longitude: -66.721833

Locational Data Source: RCRAINFO

Industries: --

Indian Country: N

Enforcement and Compliance Summary

Statute	RCRA
Compliance Monitoring Activities (5 years)	--
Date of Last Compliance Monitoring Activity	02/28/1991
Compliance Status	No Violation Identified
Qtrs in Noncompliance (of 12)	0
Qtrs with Significant Violation	0
Informal Enforcement Actions (5 years)	--
Formal Enforcement Actions (5 years)	--
Penalties from Formal Enforcement Actions (5 years)	--
EPA Cases (5 years)	--
Penalties from EPA Cases (5 years)	--

Regulatory Information

Clean Air Act (CAA): No Information

Clean Water Act (CWA): No Information

Resource Conservation and Recovery Act (RCRA): Inactive Other, (PRD987369733)

Safe Drinking Water Act (SDWA): No Information

Other Regulatory Reports

Air Emissions Inventory (EIS): No Information

Greenhouse Gas Emissions (eGGRT): No Information

Toxic Releases (TRI): No Information

Compliance and Emissions Data Reporting Interface (CEDRI): No Information

Go To Enforcement/Compliance Details

Known Data Problems <https://epa.gov/resources/echo-data/known-data-problems>

Facility/System Characteristics

Facility/System Characteristics

System	Statute	Identifier	Universe	Status	Areas	Permit Expiration Date	Indian Country	Latitude	Longitude
FRS		110007810547					N	18.471475	-66.721833
RCRAInfo	RCRA	PRD987369733	Other	Inactive ( )			N	18.471475	-66.721833

Facility Address

System	Statute	Identifier	Facility Name	Facility Address	Facility County
FRS		110007810547	PRASA ARECIBO REGIONAL OFFICE	CAPITAN ABREU ST, ARECIBO, PR 00612	Arecibo Municipio
RCRAInfo	RCRA	PRD987369733	PRASA ARECIBO REGIONAL OFFICE	CAPITAN ABREU ST, ARECIBO, PR 00612	Arecibo Municipio

Facility SIC (Standard Industrial Classification) Codes

System	Identifier	SIC Code	SIC Description

No data records returned

Facility NAICS (North American Industry Classification System) Codes

System	Identifier	NAICS Code	NAICS Description

No data records returned

Facility Tribe Information

Reservation Name	Tribe Name	EPA Tribal ID	Distance to Tribe (miles)

No data records returned

Enforcement and Compliance

Compliance Monitoring History

Last 5 Years

Statute	Source ID	System	Activity Type	Compliance Monitoring Type	Lead Agency	Date	Finding (if applicable)

No data records returned

Entries in italics are not included in ECHO's Compliance Monitoring Activity counts because they are not compliance monitoring strategy <https://www.epa.gov/compliance/compliance-monitoring-programs> *activities or because they are not counted as inspections within EPA's Annual Results* <https://www.epa.gov/enforcement/enforcement-data-and-results>.

Compliance Summary Data

Statute	Source ID	Current SNC (Significant Noncompliance)/HPV (High Priority Violation)	Current As Of	Qtrs with NC (Noncompliance) (of 12)	Data Last Refreshed
RCRA	PRD987369733	No	08/09/2025	0	08/08/2025

Three-Year Compliance History by Quarter

Statute	Program/Pollutant/Violation Type		QTR 1	QTR 2	QTR 3	QTR 4	QTR 5	QTR 6	QTR 7	QTR 8	QTR 9	QTR 10	QTR 11
RCRA (Source ID: PRD987369733)			10/01-12/31/22	01/01-03/31/23	04/01-06/30/23	07/01-09/30/23	10/01-12/31/23	01/01-03/31/24	04/01-06/30/24	07/01-09/30/24	10/01-12/31/24	01/01-03/31/25	04/01-06/30/25
	Facility-Level Status		No Violation Identified	No Violation Identified	No Violation Identified	No Violation Identified	No Violation Identified	No Violation Identified	No Violation Identified	No Violation Identified	No Violation Identified	No Violation Identified	No Violation Identified
	Violation	Agency											

Informal Enforcement Actions

Last 5 Years

Statute	System	Source ID	Type of Action	Lead Agency	Date

No data records returned

Entries in italics are not counted as "informal enforcement actions" in EPA policies pertaining to enforcement response tools.

Formal Enforcement Actions

Last 5 Years

Statute	System	Law/ Section	Source ID	Type of Action	Case No.	Lead Agency	Case Name	Issued/ Filed Date	Settlements/ Actions	Settlement/ Action Date	Federal Penalty Assessed	State/ Local Penalty Assessed	Penalty Amount Collected	SEP Value	Comp Action Cost

No data records returned

Environmental Conditions

Watersheds

12-Digit WBD (Watershed Boundary Dataset) HUC (RAD (Reach Address Database))	WBD (Watershed Boundary Dataset) Subwatershed Name (RAD (Reach Address Database))	State Water Body Name (ICIS (Integrated Compliance Information System))	Beach Closures Within Last Year	Beach Closures Within Last Two Years	Pollutants Potentially Related to Impairment	Watershed with ESA (Endangered Species Act)-listed Aquatic Species?

No data records returned

Assessed Waters From Latest State Submission (ATTAINS)

State	Report Cycle	Assessment Unit ID	Assessment Unit Name	Water Condition	Cause Groups Impaired	Drinking Water Use	Ecological Use	Fish Consumption Use	Recreation Use	Other Use

No data records returned

Air Quality Nonattainment Areas

Pollutant	Within Nonattainment Status Area?	Nonattainment Status Applicable Standard(s)	Within Maintenance Status Area?	Maintenance Status Applicable Standard(s)
Ozone	No	--	No	--
Lead	Yes	Lead (2008)	No	--
Particulate Matter	No	--	No	--
Carbon Monoxide	No	--	No	--
Sulfur Dioxide	No	--	No	--

Pollutants

Toxics Release Inventory History of Reported Chemicals Released or Transferred in Pounds per Year at Site

TRI Facility ID	Year	Air Emissions	Surface Water Discharges	Off-Site Transfers to POTWs (Publicly Owned Treatment Works)	Underground Injections	Disposal to Land	Total On-Site Releases	Total Off-Site Transfers

No data records returned

Toxics Release Inventory Total Releases and Transfers in Pounds by Chemical and Year

Chemical Name

No data records returned

Community

Demographic Profile of Surrounding Area (1-Mile Radius)

This section provides demographic information regarding the community surrounding the facility. ECHO compliance data alone are not sufficient to determine whether violations at a particular facility had negative impacts on public health or the environment. Statistics are based upon the 2022 American Community Survey (ACS) 5-year Summary and are accurate to the extent that the facility latitude and longitude listed below are correct. Census boundaries and demographic data for U.S. Territories are based on the "2020 Island Areas Demographic Profiles" from the U.S. Census Bureau. EPA's spatial processing methodology considers the overlap between the selected radii and ACS census block groups in determining the demographics surrounding the facility. For more detail about this methodology, see the DFR Data Dictionary <https://epa.gov/help/reports/dfr-data-dictionary#demographic>.

General Statistics (ACS (American Community Survey))	
Total Persons	6,804
Population Density	3,847/sq.mi.
Housing Units in Area	4,038
Percent People of Color	100%
Households in Area	2,847
Households on Public Assistance	238
Persons With Low Income	5,954
Percent With Low Income	89%

Geography	
Radius of Selected Area	1 mi.
Center Latitude	18.471475
Center Longitude	-66.721833
Total Area	3.121 sq.mi.
Land Area	57%
Water Area	43%

Income Breakdown (ACS (American Community Survey)) - Households (%)	
Less than $15,000	1,628 (57.16%)
$15,000 - $25,000	508 (17.84%)
$25,000 - $50,000	513 (18.01%)
$50,000 - $75,000	143 (5.02%)
Greater than $75,000	56 (1.97%)

Age Breakdown (ACS (American Community Survey)) - Persons (%)	
Children 5 years and younger	418 (6%)
Minors 17 years and younger	1,559 (23%)
Adults 18 years and older	5,246 (77%)
Seniors 65 years and older	1,484 (22%)

Race Breakdown (ACS (American Community Survey)) - Persons (%)	
White	2,395 (35%)
African-American	157 (2%)
Hispanic-Origin	6,740 (99%)
Asian	122 (2%)
Hawaiian/Pacific Islander	0 (0%)
American Indian	1 (0%)
Other/Multiracial	1,559 (23%)

Education Level (Persons 25 & older) (ACS (American Community Survey)) - Persons (%)	
Less than 9th Grade	580 (12.36%)
9th through 12th Grade	470 (10.01%)
High School Diploma	1,644 (35.02%)
Some College/2-year	480 (10.23%)
B.S./B.A. (Bachelor of Science/Bachelor of Arts) or More	1,140 (24.29%)

Detailed Facility Report

Facility Summary

SHELL SAN LUIS SS 0418

406 AVENIDA JOSE DE DIEGO, ARECIBO, PR 00612

FRS (Facility Registry Service) ID: 110004892689

EPA Region: 02

Latitude: 18.4722

Longitude: -66.72477

Locational Data Source: FRS

Industries: --

Indian Country: N

Enforcement and Compliance Summary

Statute	RCRA
Compliance Monitoring Activities (5 years)	--
Date of Last Compliance Monitoring Activity	--
Compliance Status	No Violation Identified
Qtrs in Noncompliance (of 12)	0
Qtrs with Significant Violation	0
Informal Enforcement Actions (5 years)	--
Formal Enforcement Actions (5 years)	--
Penalties from Formal Enforcement Actions (5 years)	--
EPA Cases (5 years)	--
Penalties from EPA Cases (5 years)	--

Regulatory Information

Clean Air Act (CAA): No Information

Clean Water Act (CWA): No Information

Resource Conservation and Recovery Act (RCRA): Inactive Other, (PRR000003954)

Safe Drinking Water Act (SDWA): No Information

Other Regulatory Reports

Air Emissions Inventory (EIS): No Information

Greenhouse Gas Emissions (eGGRT): No Information

Toxic Releases (TRI): No Information

Compliance and Emissions Data Reporting Interface (CEDRI): No Information

Go To Enforcement/Compliance Details

Known Data Problems <https://epa.gov/resources/echo-data/known-data-problems>

Facility/System Characteristics

Facility/System Characteristics

System	Statute	Identifier	Universe	Status	Areas	Permit Expiration Date	Indian Country	Latitude	Longitude
FRS		110004892689					N	18.4722	-66.72477
ICIS		1400005319					N	18.4725	-66.724722
RCRAInfo	RCRA	PRR000003954	Other	Inactive ( )			N		

Facility Address

System	Statute	Identifier	Facility Name	Facility Address	Facility County
FRS		110004892689	SHELL SAN LUIS SS 0418	406 AVENIDA JOSE DE DIEGO, ARECIBO, PR 00612	Arecibo Municipio
ICIS		1400005319	SHELL #418	CALLE JOSE DE DIEGO #406, ARECIBO, PR 00612	Arecibo Municipio
RCRAInfo	RCRA	PRR000003954	SAN LUIS SS 0418	CALLE JOSE DE DIEGO 406, ARECIBO, PR 00613	Arecibo Municipio

Facility SIC (Standard Industrial Classification) Codes

System	Identifier	SIC Code	SIC Description

No data records returned

Facility NAICS (North American Industry Classification System) Codes

System	Identifier	NAICS Code	NAICS Description

No data records returned

Facility Tribe Information

Reservation Name	Tribe Name	EPA Tribal ID	Distance to Tribe (miles)

No data records returned

Enforcement and Compliance

Compliance Monitoring History

Last 5 Years

Statute	Source ID	System	Activity Type	Compliance Monitoring Type	Lead Agency	Date	Finding (if applicable)

No data records returned

Entries in italics are not included in ECHO's Compliance Monitoring Activity counts because they are not compliance monitoring strategy <https://www.epa.gov/compliance/compliance-monitoring-programs> *activities or because they are not counted as inspections within EPA's Annual Results* <https://www.epa.gov/enforcement/enforcement-data-and-results>.

Compliance Summary Data

Statute	Source ID	Current SNC (Significant Noncompliance)/HPV (High Priority Violation)	Current As Of	Qtrs with NC (Noncompliance) (of 12)	Data Last Refreshed
RCRA	PRR000003954	No	08/09/2025	0	08/08/2025

Three-Year Compliance History by Quarter

Statute	Program/Pollutant/Violation Type		QTR 1	QTR 2	QTR 3	QTR 4	QTR 5	QTR 6	QTR 7	QTR 8	QTR 9	QTR 10	QTR 11
RCRA (Source ID: PRR000003954)			10/01-12/31/22	01/01-03/31/23	04/01-06/30/23	07/01-09/30/23	10/01-12/31/23	01/01-03/31/24	04/01-06/30/24	07/01-09/30/24	10/01-12/31/24	01/01-03/31/25	04/01-06/30/25
	Facility-Level Status		No Violation Identified	No Violation Identified	No Violation Identified	No Violation Identified	No Violation Identified	No Violation Identified	No Violation Identified	No Violation Identified	No Violation Identified	No Violation Identified	No Violation Identified
	Violation	Agency											

Informal Enforcement Actions

Last 5 Years

Statute	System	Source ID	Type of Action	Lead Agency	Date

No data records returned

Entries in italics are not counted as "informal enforcement actions" in EPA policies pertaining to enforcement response tools.

Formal Enforcement Actions

Last 5 Years

Statute	System	Law/ Section	Source ID	Type of Action	Case No.	Lead Agency	Case Name	Issued/ Filed Date	Settlements/ Actions	Settlement/ Action Date	Federal Penalty Assessed	State/ Local Penalty Assessed	Penalty Amount Collected	SEP Value	Comp Action Cost

No data records returned

Environmental Conditions

Watersheds

12-Digit WBD (Watershed Boundary Dataset) HUC (RAD (Reach Address Database))	WBD (Watershed Boundary Dataset) Subwatershed Name (RAD (Reach Address Database))	State Water Body Name (ICIS (Integrated Compliance Information System))	Beach Closures Within Last Year	Beach Closures Within Last Two Years	Pollutants Potentially Related to Impairment	Watershed with ESA (Endangered Species Act)-listed Aquatic Species?

No data records returned

Assessed Waters From Latest State Submission (ATTAINS)

State	Report Cycle	Assessment Unit ID	Assessment Unit Name	Water Condition	Cause Groups Impaired	Drinking Water Use	Ecological Use	Fish Consumption Use	Recreation Use	Other Use

No data records returned

Air Quality Nonattainment Areas

Pollutant	Within Nonattainment Status Area?	Nonattainment Status Applicable Standard(s)	Within Maintenance Status Area?	Maintenance Status Applicable Standard(s)
Ozone	No	--	No	--
Lead	Yes	Lead (2008)	No	--
Particulate Matter	No	--	No	--
Carbon Monoxide	No	--	No	--
Sulfur Dioxide	No	--	No	--

Pollutants

Toxics Release Inventory History of Reported Chemicals Released or Transferred in Pounds per Year at Site

TRI Facility ID	Year	Air Emissions	Surface Water Discharges	Off-Site Transfers to POTWs (Publicly Owned Treatment Works)	Underground Injections	Disposal to Land	Total On-Site Releases	Total Off-Site Transfers

No data records returned

Toxics Release Inventory Total Releases and Transfers in Pounds by Chemical and Year

Chemical Name

No data records returned

Community

Demographic Profile of Surrounding Area (1-Mile Radius)

This section provides demographic information regarding the community surrounding the facility. ECHO compliance data alone are not sufficient to determine whether violations at a particular facility had negative impacts on public health or the environment. Statistics are based upon the 2022 American Community Survey (ACS) 5-year Summary and are accurate to the extent that the facility latitude and longitude listed below are correct. Census boundaries and demographic data for U.S. Territories are based on the "2020 Island Areas Demographic Profiles" from the U.S. Census Bureau. EPA's spatial processing methodology considers the overlap between the selected radii and ACS census block groups in determining the demographics surrounding the facility. For more detail about this methodology, see the DFR Data Dictionary <https://epa.gov/help/reports/dfr-data-dictionary#demographic>.

General Statistics (ACS (American Community Survey))	
Total Persons	8,185
Population Density	4,755/sq.mi.
Housing Units in Area	4,728
Percent People of Color	100%
Households in Area	3,401
Households on Public Assistance	266
Persons With Low Income	7,163
Percent With Low Income	89%

Geography	
Radius of Selected Area	1 mi.
Center Latitude	18.4722
Center Longitude	-66.72477
Total Area	3.121 sq.mi.
Land Area	55%
Water Area	45%

Income Breakdown (ACS (American Community Survey)) - Households (%)	
Less than $15,000	1,961 (57.68%)
$15,000 - $25,000	582 (17.12%)
$25,000 - $50,000	623 (18.32%)
$50,000 - $75,000	168 (4.94%)
Greater than $75,000	66 (1.94%)

Age Breakdown (ACS (American Community Survey)) - Persons (%)	
Children 5 years and younger	490 (6%)
Minors 17 years and younger	1,900 (23%)
Adults 18 years and older	6,285 (77%)
Seniors 65 years and older	1,757 (21%)

Race Breakdown (ACS (American Community Survey)) - Persons (%)	
White	2,877 (35%)
African-American	166 (2%)
Hispanic-Origin	8,109 (99%)
Asian	146 (2%)
Hawaiian/Pacific Islander	0 (0%)
American Indian	2 (0%)
Other/Multiracial	1,855 (23%)

Education Level (Persons 25 & older) (ACS (American Community Survey)) - Persons (%)	
Less than 9th Grade	736 (13.08%)
9th through 12th Grade	538 (9.56%)
High School Diploma	2,005 (35.64%)
Some College/2-year	549 (9.76%)
B.S./B.A. (Bachelor of Science/Bachelor of Arts) or More	1,327 (23.59%)

Detailed Facility Report

Facility Summary

TEXACO PR INC VILLA SS

PR-2 KM 77.1, ARECIBO, PR 00612

FRS (Facility Registry Service) ID: 110007821740

EPA Region: 02

Latitude: 18.472252

Longitude: -66.724314

Locational Data Source: RCRAINFO

Industries: --

Indian Country: N

Enforcement and Compliance Summary

Statute	RCRA
Compliance Monitoring Activities (5 years)	--
Date of Last Compliance Monitoring Activity	--
Compliance Status	No Violation Identified
Qtrs in Noncompliance (of 12)	0
Qtrs with Significant Violation	0
Informal Enforcement Actions (5 years)	--
Formal Enforcement Actions (5 years)	--
Penalties from Formal Enforcement Actions (5 years)	--
EPA Cases (5 years)	--
Penalties from EPA Cases (5 years)	--

Regulatory Information

Clean Air Act (CAA): No Information

Clean Water Act (CWA): No Information

Resource Conservation and Recovery Act (RCRA): Inactive Other, (PRR000009175), Inactive Other, (PRR000006536), Inactive Other, (PRR000010363)

Safe Drinking Water Act (SDWA): No Information

Other Regulatory Reports

Air Emissions Inventory (EIS): No Information

Greenhouse Gas Emissions (eGGRT): No Information

Toxic Releases (TRI): No Information

Compliance and Emissions Data Reporting Interface (CEDRI): No Information

Go To Enforcement/Compliance Details

Known Data Problems <https://epa.gov/resources/echo-data/known-data-problems>

Facility/System Characteristics

Facility/System Characteristics

System	Statute	Identifier	Universe	Status	Areas	Permit Expiration Date	Indian Country	Latitude	Longitude
FRS		110007821740					N	18.472252	-66.724314
RCRAInfo	RCRA	PRR000009175	Other	Inactive ( )			N	18.472111	-66.726742
RCRAInfo	RCRA	PRR000006536	Other	Inactive ( )			N	18.472175	-66.72578
RCRAInfo	RCRA	PRR000010363	Other	Inactive ( )			N	18.472175	-66.72578

Facility Address

System	Statute	Identifier	Facility Name	Facility Address	Facility County
FRS		110007821740	TEXACO PR INC VILLA SS	PR-2 KM 77.1, ARECIBO, PR 00612	Arecibo Municipio
RCRAInfo	RCRA	PRR000009175	TEXACO PR INC AUREA CANALES SS	RD 2 KM 77.2, ARECIBO, PR 00612	Arecibo Municipio
RCRAInfo	RCRA	PRR000006536	TEXACO PR INC - HECTOR NOLLA SS	RD PR 2 KM 77.1, ARECIBO, PR 00612	Arecibo Municipio
RCRAInfo	RCRA	PRR000010363	TEXACO PR INC VILLA SS	RD 2 KM 77.1, ARECIBO, PR 00612	Arecibo Municipio

Facility SIC (Standard Industrial Classification) Codes

System	Identifier	SIC Code	SIC Description

No data records returned

Facility NAICS (North American Industry Classification System) Codes

System	Identifier	NAICS Code	NAICS Description

No data records returned

Facility Tribe Information

Reservation Name	Tribe Name	EPA Tribal ID	Distance to Tribe (miles)

No data records returned

Enforcement and Compliance

Compliance Monitoring History

Last 5 Years

Statute	Source ID	System	Activity Type	Compliance Monitoring Type	Lead Agency	Date	Finding (if applicable)

No data records returned

Entries in italics are not included in ECHO's Compliance Monitoring Activity counts because they are not compliance monitoring strategy <https://www.epa.gov/compliance/compliance-monitoring-programs> *activities or because they are not counted as inspections within EPA's Annual Results* <https://www.epa.gov/enforcement/enforcement-data-and-results>.

Compliance Summary Data

Statute	Source ID	Current SNC (Significant Noncompliance)/HPV (High Priority Violation)	Current As Of	Qtrs with NC (Noncompliance) (of 12)	Data Last Refreshed
RCRA	PRR000009175	No	08/09/2025	0	08/08/2025
RCRA	PRR000006536	No	08/09/2025	0	08/08/2025
RCRA	PRR000010363	No	08/09/2025	0	08/08/2025

Three-Year Compliance History by Quarter

Statute	Program/Pollutant/Violation Type		QTR 1	QTR 2	QTR 3	QTR 4	QTR 5	QTR 6	QTR 7	QTR 8	QTR 9	QTR 10	QTR 11
RCRA (Source ID: PRR000006536)			10/01-12/31/22	01/01-03/31/23	04/01-06/30/23	07/01-09/30/23	10/01-12/31/23	01/01-03/31/24	04/01-06/30/24	07/01-09/30/24	10/01-12/31/24	01/01-03/31/25	04/01-06/30/25
	Facility-Level Status		No Violation Identified	No Violation Identified	No Violation Identified	No Violation Identified	No Violation Identified	No Violation Identified	No Violation Identified	No Violation Identified	No Violation Identified	No Violation Identified	No Violation Identified
	Violation	Agency											
RCRA (Source ID: PRR000009175)			10/01-12/31/22	01/01-03/31/23	04/01-06/30/23	07/01-09/30/23	10/01-12/31/23	01/01-03/31/24	04/01-06/30/24	07/01-09/30/24	10/01-12/31/24	01/01-03/31/25	04/01-06/30/25
	Facility-Level Status		No Violation Identified	No Violation Identified	No Violation Identified	No Violation Identified	No Violation Identified	No Violation Identified	No Violation Identified	No Violation Identified	No Violation Identified	No Violation Identified	No Violation Identified
	Violation	Agency											
RCRA (Source ID: PRR000010363)			10/01-12/31/22	01/01-03/31/23	04/01-06/30/23	07/01-09/30/23	10/01-12/31/23	01/01-03/31/24	04/01-06/30/24	07/01-09/30/24	10/01-12/31/24	01/01-03/31/25	04/01-06/30/25
	Facility-Level Status		No Violation Identified	No Violation Identified	No Violation Identified	No Violation Identified	No Violation Identified	No Violation Identified	No Violation Identified	No Violation Identified	No Violation Identified	No Violation Identified	No Violation Identified
	Violation	Agency											

Informal Enforcement Actions

Last 5 Years

Statute	System	Source ID	Type of Action	Lead Agency	Date

No data records returned

Entries in italics are not counted as "informal enforcement actions" in EPA policies pertaining to enforcement response tools.

Formal Enforcement Actions

Last 5 Years

Statute	System	Law/ Section	Source ID	Type of Action	Case No.	Lead Agency	Case Name	Issued/ Filed Date	Settlements/ Actions	Settlement/ Action Date	Federal Penalty Assessed	State/ Local Penalty Assessed	Penalty Amount Collected	SEP Value	Comp Action Cost

No data records returned

Environmental Conditions

Watersheds

12-Digit WBD (Watershed Boundary Dataset) HUC (RAD (Reach Address Database))	WBD (Watershed Boundary Dataset) Subwatershed Name (RAD (Reach Address Database))	State Water Body Name (ICIS (Integrated Compliance Information System))	Beach Closures Within Last Year	Beach Closures Within Last Two Years	Pollutants Potentially Related to Impairment	Watershed with ESA (Endangered Species Act)-listed Aquatic Species?

No data records returned

Assessed Waters From Latest State Submission (ATTAINS)

State	Report Cycle	Assessment Unit ID	Assessment Unit Name	Water Condition	Cause Groups Impaired	Drinking Water Use	Ecological Use	Fish Consumption Use	Recreation Use	Other Use

No data records returned

Air Quality Nonattainment Areas

Pollutant	Within Nonattainment Status Area?	Nonattainment Status Applicable Standard(s)	Within Maintenance Status Area?	Maintenance Status Applicable Standard(s)
Ozone	No	--	No	--
Lead	Yes	Lead (2008)	No	--
Particulate Matter	No	--	No	--
Carbon Monoxide	No	--	No	--
Sulfur Dioxide	No	--	No	--

Pollutants

Toxics Release Inventory History of Reported Chemicals Released or Transferred in Pounds per Year at Site

TRI Facility ID	Year	Air Emissions	Surface Water Discharges	Off-Site Transfers to POTWs (Publicly Owned Treatment Works)	Underground Injections	Disposal to Land	Total On-Site Releases	Total Off-Site Transfers

No data records returned

Toxics Release Inventory Total Releases and Transfers in Pounds by Chemical and Year

Chemical Name

No data records returned

Community

Demographic Profile of Surrounding Area (1-Mile Radius)

This section provides demographic information regarding the community surrounding the facility. ECHO compliance data alone are not sufficient to determine whether violations at a particular facility had negative impacts on public health or the environment. Statistics are based upon the 2022 American Community Survey (ACS) 5-year Summary and are accurate to the extent that the facility latitude and longitude listed below are correct. Census boundaries and demographic data for U.S. Territories are based on the "2020 Island Areas Demographic Profiles" from the U.S. Census Bureau. EPA's spatial processing methodology considers the overlap between the selected radii and ACS census block groups in determining the demographics surrounding the facility. For more detail about this methodology, see the DFR Data Dictionary <https://epa.gov/help/reports/dfr-data-dictionary#demographic>.

General Statistics (ACS (American Community Survey))	
Total Persons	7,932
Population Density	4,647/sq.mi.
Housing Units in Area	4,606
Percent People of Color	100%
Households in Area	3,304
Households on Public Assistance	260
Persons With Low Income	6,941
Percent With Low Income	89%

Geography	
Radius of Selected Area	1 mi.
Center Latitude	18.472252
Center Longitude	-66.724314
Total Area	3.121 sq.mi.
Land Area	55%

Age Breakdown (ACS (American Community Survey)) - Persons (%)	
Children 5 years and younger	474 (6%)
Minors 17 years and younger	1,842 (23%)
Adults 18 years and older	6,091 (77%)
Seniors 65 years and older	1,711 (22%)

Race Breakdown (ACS (American Community Survey)) - Persons (%)	
White	2,792 (35%)
African-American	161 (2%)
Hispanic-Origin	7,856 (99%)
Asian	142 (2%)
Hawaiian/Pacific Islander	0 (0%)
American Indian	2 (0%)
Other/Multiracial	1,798 (23%)

Geography	
Water Area	45%
Income Breakdown (ACS (American Community Survey)) - Households (%)	
Less than $15,000	1,905 (57.66%)
$15,000 - $25,000	568 (17.19%)
$25,000 - $50,000	605 (18.31%)
$50,000 - $75,000	163 (4.93%)
Greater than $75,000	63 (1.91%)

Education Level (Persons 25 & older) (ACS (American Community Survey)) - Persons (%)	
Less than 9th Grade	713 (13.06%)
9th through 12th Grade	526 (9.64%)
High School Diploma	1,948 (35.69%)
Some College/2-year	526 (9.64%)
B.S./B.A. (Bachelor of Science/Bachelor of Arts) or More	1,284 (23.53%)

Detailed Facility Report

Facility Summary

WALGREENS 142

155 AVENIDA JOSE DE DIEGO, ARECIBO, PR 00612

FRS (Facility Registry Service) ID: 110004892386

EPA Region: 02

Latitude: 18.4722

Longitude: -66.71672

Locational Data Source: FRS

Industries: --

Indian Country: N

Enforcement and Compliance Summary

Statute	RCRA
Compliance Monitoring Activities (5 years)	--
Date of Last Compliance Monitoring Activity	--
Compliance Status	No Violation Identified
Qtrs in Noncompliance (of 12)	0
Qtrs with Significant Violation	0
Informal Enforcement Actions (5 years)	--
Formal Enforcement Actions (5 years)	--
Penalties from Formal Enforcement Actions (5 years)	--
EPA Cases (5 years)	--
Penalties from EPA Cases (5 years)	--

Regulatory Information

Clean Air Act (CAA): No Information

Clean Water Act (CWA): No Information

Resource Conservation and Recovery Act (RCRA): Active VSQG, (PRR000003111)

Safe Drinking Water Act (SDWA): No Information

Other Regulatory Reports

Air Emissions Inventory (EIS): No Information

Greenhouse Gas Emissions (eGGRT): No Information

Toxic Releases (TRI): No Information

Compliance and Emissions Data Reporting Interface (CEDRI): No Information

Go To Enforcement/Compliance Details

Known Data Problems <https://epa.gov/resources/echo-data/known-data-problems>

Facility/System Characteristics

Facility/System Characteristics

System	Statute	Identifier	Universe	Status	Areas	Permit Expiration Date	Indian Country	Latitude	Longitude
FRS		110004892386					N	18.4722	-66.71672
RCRAInfo	RCRA	PRR000003111	VSQG	Active (H)			N	18.472132	-66.71671

Facility Address

System	Statute	Identifier	Facility Name	Facility Address	Facility County
FRS		110004892386	WALGREENS 142	155 AVENIDA JOSE DE DIEGO, ARECIBO, PR 00612	Arecibo Municipio
RCRAInfo	RCRA	PRR000003111	WALGREENS 142	DE DIEGO 155, ARECIBO, PR 00612-4524	Arecibo Municipio

Facility SIC (Standard Industrial Classification) Codes

System	Identifier	SIC Code	SIC Description

No data records returned

Facility NAICS (North American Industry Classification System) Codes

System	Identifier	NAICS Code	NAICS Description

No data records returned

Facility Tribe Information

Reservation Name	Tribe Name	EPA Tribal ID	Distance to Tribe (miles)

No data records returned

Enforcement and Compliance

Compliance Monitoring History

Last 5 Years

Statute	Source ID	System	Activity Type	Compliance Monitoring Type	Lead Agency	Date	Finding (if applicable)

No data records returned

Entries in italics are not included in ECHO's Compliance Monitoring Activity counts because they are not compliance monitoring strategy <https://www.epa.gov/compliance/compliance-monitoring-programs> *activities or because they are not counted as inspections within EPA's Annual Results* <https://www.epa.gov/enforcement/enforcement-data-and-results>.

Compliance Summary Data

Statute	Source ID	Current SNC (Significant Noncompliance)/HPV (High Priority Violation)	Current As Of	Qtrs with NC (Noncompliance) (of 12)	Data Last Refreshed
RCRA	PRR000003111	No	08/09/2025	0	08/08/2025

Three-Year Compliance History by Quarter

Statute	Program/Pollutant/Violation Type		QTR 1	QTR 2	QTR 3	QTR 4	QTR 5	QTR 6	QTR 7	QTR 8	QTR 9	QTR 10	QTR 11
RCRA (Source ID: PRR000003111)			10/01-12/31/22	01/01-03/31/23	04/01-06/30/23	07/01-09/30/23	10/01-12/31/23	01/01-03/31/24	04/01-06/30/24	07/01-09/30/24	10/01-12/31/24	01/01-03/31/25	04/01-06/30/25
	Facility-Level Status		No Violation Identified	No Violation Identified	No Violation Identified	No Violation Identified	No Violation Identified	No Violation Identified	No Violation Identified	No Violation Identified	No Violation Identified	No Violation Identified	No Violation Identified
	Violation	Agency											

Informal Enforcement Actions

Last 5 Years

Statute	System	Source ID	Type of Action	Lead Agency	Date

No data records returned

Entries in italics are not counted as "informal enforcement actions" in EPA policies pertaining to enforcement response tools.

Formal Enforcement Actions

Last 5 Years

Statute	System	Law/ Section	Source ID	Type of Action	Case No.	Lead Agency	Case Name	Issued/ Filed Date	Settlements/ Actions	Settlement/ Action Date	Federal Penalty Assessed	State/ Local Penalty Assessed	Penalty Amount Collected	SEP Value	Comp Action Cost

No data records returned

Environmental Conditions

Watersheds

12-Digit WBD (Watershed Boundary Dataset) HUC (RAD (Reach Address Database))	WBD (Watershed Boundary Dataset) Subwatershed Name (RAD (Reach Address Database))	State Water Body Name (ICIS (Integrated Compliance Information System))	Beach Closures Within Last Year	Beach Closures Within Last Two Years	Pollutants Potentially Related to Impairment	Watershed with ESA (Endangered Species Act)-listed Aquatic Species?

No data records returned

Assessed Waters From Latest State Submission (ATTAINS)

State	Report Cycle	Assessment Unit ID	Assessment Unit Name	Water Condition	Cause Groups Impaired	Drinking Water Use	Ecological Use	Fish Consumption Use	Recreation Use	Other Use

No data records returned

Air Quality Nonattainment Areas

Pollutant	Within Nonattainment Status Area?	Nonattainment Status Applicable Standard(s)	Within Maintenance Status Area?	Maintenance Status Applicable Standard(s)
Ozone	No	--	No	--
Lead	Yes	Lead (2008)	No	--
Particulate Matter	No	--	No	--
Carbon Monoxide	No	--	No	--
Sulfur Dioxide	No	--	No	--

Pollutants

Toxics Release Inventory History of Reported Chemicals Released or Transferred in Pounds per Year at Site

TRI Facility ID	Year	Air Emissions	Surface Water Discharges	Off-Site Transfers to POTWs (Publicly Owned Treatment Works)	Underground Injections	Disposal to Land	Total On-Site Releases	Total Off-Site Transfers

No data records returned

Toxics Release Inventory Total Releases and Transfers in Pounds by Chemical and Year

Chemical Name

No data records returned

Community

Demographic Profile of Surrounding Area (1-Mile Radius)

This section provides demographic information regarding the community surrounding the facility. ECHO compliance data alone are not sufficient to determine whether violations at a particular facility had negative impacts on public health or the environment. Statistics are based upon the 2022 American Community Survey (ACS) 5-year Summary and are accurate to the extent that the facility latitude and longitude listed below are correct. Census boundaries and demographic data for U.S. Territories are based on the "2020 Island Areas Demographic Profiles" from the U.S. Census Bureau. EPA's spatial processing methodology considers the overlap between the selected radii and ACS census block groups in determining the demographics surrounding the facility. For more detail about this methodology, see the DFR Data Dictionary <https://epa.gov/help/reports/dfr-data-dictionary#demographic>.

General Statistics (ACS (American Community Survey))	
Total Persons	3,492
Population Density	2,105/sq.mi.
Housing Units in Area	2,340
Percent People of Color	100%
Households in Area	1,478
Households on Public Assistance	128
Persons With Low Income	2,981
Percent With Low Income	87%

Geography	
Radius of Selected Area	1 mi.
Center Latitude	18.4722
Center Longitude	-66.71672
Total Area	3.121 sq.mi.
Land Area	53%
Water Area	47%

Income Breakdown (ACS (American Community Survey)) - Households (%)	
Less than $15,000	744 (50.44%)
$15,000 - $25,000	306 (20.75%)
$25,000 - $50,000	288 (19.53%)
$50,000 - $75,000	94 (6.37%)
Greater than $75,000	43 (2.92%)

Age Breakdown (ACS (American Community Survey)) - Persons (%)	
Children 5 years and younger	193 (6%)
Minors 17 years and younger	664 (19%)
Adults 18 years and older	2,827 (81%)
Seniors 65 years and older	872 (25%)

Race Breakdown (ACS (American Community Survey)) - Persons (%)	
White	1,267 (36%)
African-American	120 (3%)
Hispanic-Origin	3,475 (100%)
Asian	65 (2%)
Hawaiian/Pacific Islander	0 (0%)
American Indian	2 (0%)
Other/Multiracial	776 (22%)

Education Level (Persons 25 & older) (ACS (American Community Survey)) - Persons (%)	
Less than 9th Grade	231 (9.19%)
9th through 12th Grade	255 (10.15%)
High School Diploma	764 (30.4%)
Some College/2-year	313 (12.46%)
B.S./B.A. (Bachelor of Science/Bachelor of Arts) or More	758 (30.16%)

Detailed Facility Report

Facility Summary

WALGREENS #1463

446 AVE JUAN ROSADO, ARECIBO, PR 00612

FRS (Facility Registry Service) ID: 110063381200

EPA Region: 02

Latitude: 18.469774

Longitude: -66.715612

Locational Data Source: FRS

Industries: Health and Personal Care Retailers

Indian Country: N

Enforcement and Compliance Summary

Statute	RCRA
Compliance Monitoring Activities (5 years)	--
Date of Last Compliance Monitoring Activity	--
Compliance Status	No Violation Identified
Qtrs in Noncompliance (of 12)	0
Qtrs with Significant Violation	0
Informal Enforcement Actions (5 years)	--
Formal Enforcement Actions (5 years)	--
Penalties from Formal Enforcement Actions (5 years)	--
EPA Cases (5 years)	--
Penalties from EPA Cases (5 years)	--

Regulatory Information

Clean Air Act (CAA): No Information

Clean Water Act (CWA): No Information

Resource Conservation and Recovery Act (RCRA): Active VSQG, (PRR000024984)

Safe Drinking Water Act (SDWA): No Information

Other Regulatory Reports

Air Emissions Inventory (EIS): No Information

Greenhouse Gas Emissions (eGGRT): No Information

Toxic Releases (TRI): No Information

Compliance and Emissions Data Reporting Interface (CEDRI): No Information

Go To Enforcement/Compliance Details

Known Data Problems <https://epa.gov/resources/echo-data/known-data-problems>

Facility/System Characteristics

Facility/System Characteristics

System	Statute	Identifier	Universe	Status	Areas	Permit Expiration Date	Indian Country	Latitude	Longitude
FRS		110063381200					N	18.469774	-66.715612
RCRAInfo	RCRA	PRR000024984	VSQG	Active (H)			N	18.468794	-66.716786

Facility Address

System	Statute	Identifier	Facility Name	Facility Address	Facility County
FRS		110063381200	WALGREENS #1463	446 AVE JUAN ROSADO, ARECIBO, PR 00612	Arecibo Municipio
RCRAInfo	RCRA	PRR000024984	WALGREENS #1463	446 AVE JUAN ROSADO, ARECIBO, PR 00612	Arecibo Municipio

Facility SIC (Standard Industrial Classification) Codes

System	Identifier	SIC Code	SIC Description

No data records returned

Facility NAICS (North American Industry Classification System) Codes

System	Identifier	NAICS Code	NAICS Description
RCRAInfo	PRR000024984	456110	Pharmacies and Drug Retailers

Facility Tribe Information

Reservation Name	Tribe Name	EPA Tribal ID	Distance to Tribe (miles)

No data records returned

Enforcement and Compliance

Compliance Monitoring History

Last 5 Years

Statute	Source ID	System	Activity Type	Compliance Monitoring Type	Lead Agency	Date	Finding (if applicable)

No data records returned

Entries in italics are not included in ECHO's Compliance Monitoring Activity counts because they are not compliance monitoring strategy <https://www.epa.gov/compliance/compliance-monitoring-programs> *activities or because they are not counted as inspections within EPA's Annual Results* <https://www.epa.gov/enforcement/enforcement-data-and-results>.

Compliance Summary Data

Statute	Source ID	Current SNC (Significant Noncompliance)/HPV (High Priority Violation)	Current As Of	Qtrs with NC (Noncompliance) (of 12)	Data Last Refreshed
RCRA	PRR000024984	No	08/09/2025	0	08/08/2025

Three-Year Compliance History by Quarter

Statute	Program/Pollutant/Violation Type		QTR 1	QTR 2	QTR 3	QTR 4	QTR 5	QTR 6	QTR 7	QTR 8	QTR 9	QTR 10	QTR 11
RCRA (Source ID: PRR000024984)			10/01-12/31/22	01/01-03/31/23	04/01-06/30/23	07/01-09/30/23	10/01-12/31/23	01/01-03/31/24	04/01-06/30/24	07/01-09/30/24	10/01-12/31/24	01/01-03/31/25	04/01-06/30/25
	Facility-Level Status		No Violation Identified	No Violation Identified	No Violation Identified	No Violation Identified	No Violation Identified	No Violation Identified	No Violation Identified	No Violation Identified	No Violation Identified	No Violation Identified	No Violation Identified
	Violation	Agency											

Informal Enforcement Actions

Last 5 Years

Statute	System	Source ID	Type of Action	Lead Agency	Date

No data records returned

Entries in italics are not counted as "informal enforcement actions" in EPA policies pertaining to enforcement response tools.

Formal Enforcement Actions

Last 5 Years

Statute	System	Law/ Section	Source ID	Type of Action	Case No.	Lead Agency	Case Name	Issued/ Filed Date	Settlements/ Actions	Settlement/ Action Date	Federal Penalty Assessed	State/ Local Penalty Assessed	Penalty Amount Collected	SEP Value	Comp Action Cost

No data records returned

Environmental Conditions

Watersheds

12-Digit WBD (Watershed Boundary Dataset) HUC (RAD (Reach Address Database))	WBD (Watershed Boundary Dataset) Subwatershed Name (RAD (Reach Address Database))	State Water Body Name (ICIS (Integrated Compliance Information System))	Beach Closures Within Last Year	Beach Closures Within Last Two Years	Pollutants Potentially Related to Impairment	Watershed with ESA (Endangered Species Act)-listed Aquatic Species?

No data records returned

Assessed Waters From Latest State Submission (ATTAINS)

State	Report Cycle	Assessment Unit ID	Assessment Unit Name	Water Condition	Cause Groups Impaired	Drinking Water Use	Ecological Use	Fish Consumption Use	Recreation Use	Other Use

No data records returned

Air Quality Nonattainment Areas

Pollutant	Within Nonattainment Status Area?	Nonattainment Status Applicable Standard(s)	Within Maintenance Status Area?	Maintenance Status Applicable Standard(s)
Ozone	No	--	No	--
Lead	Yes	Lead (2008)	No	--
Particulate Matter	No	--	No	--
Carbon Monoxide	No	--	No	--
Sulfur Dioxide	No	--	No	--

Pollutants

Toxics Release Inventory History of Reported Chemicals Released or Transferred in Pounds per Year at Site

TRI Facility ID	Year	Air Emissions	Surface Water Discharges	Off-Site Transfers to POTWs (Publicly Owned Treatment Works)	Underground Injections	Disposal to Land	Total On-Site Releases	Total Off-Site Transfers

No data records returned

Toxics Release Inventory Total Releases and Transfers in Pounds by Chemical and Year

Chemical Name

No data records returned

e-Manifest Hazardous Waste History (Public)

Hazardous Waste Shipped in Kilograms by Year (Through 5/10/2025)

Source ID	Waste Description	2022	2023	2024	2025
PRR000024984	Hazardous Waste	39 - 40	29	38 - 39	--
PRR000024984	Acute Hazardous Waste	0 - 1	0	0 - 1	--
PRR000024984	Pharmaceutical Hazardous Waste	0 - 1	0	0 - 1	--

“Pharmaceutical Hazardous Waste” refers to quantities managed under 40 CFR part 266 subpart P and thus excluded from the Hazardous and Acute Hazardous Waste quantities shown above.

Community

Demographic Profile of Surrounding Area (1-Mile Radius)

This section provides demographic information regarding the community surrounding the facility. ECHO compliance data alone are not sufficient to determine whether violations at a particular facility had negative impacts on public health or the environment. Statistics are based upon the 2022 American Community Survey (ACS) 5-year Summary and are accurate to the extent that the facility latitude and longitude listed below are correct. Census boundaries and demographic data for U.S. Territories are based on the "2020 Island Areas Demographic Profiles" from the U.S. Census Bureau. EPA’s spatial processing methodology considers the overlap between the selected radii and ACS census block groups in determining the demographics surrounding the facility. For more detail about this methodology, see the DFR Data Dictionary <https://epa.gov/help/reports/dfr-data-dictionary#demographic>.

General Statistics (ACS (American Community Survey))	
Total Persons	3,756
Population Density	1,913/sq.mi.
Housing Units in Area	2,451
Percent People of Color	100%
Households in Area	1,573
Households on Public Assistance	139
Persons With Low Income	3,214
Percent With Low Income	87%

Geography	
Radius of Selected Area	1 mi.
Center Latitude	18.469774
Center Longitude	-66.715612
Total Area	3.121 sq.mi.
Land Area	63%
Water Area	37%

Age Breakdown (ACS (American Community Survey)) - Persons (%)	
Children 5 years and younger	220 (6%)
Minors 17 years and younger	747 (20%)
Adults 18 years and older	3,010 (80%)
Seniors 65 years and older	913 (24%)

Race Breakdown (ACS (American Community Survey)) - Persons (%)	
White	1,347 (36%)
African-American	125 (3%)
Hispanic-Origin	3,736 (99%)
Asian	64 (2%)
Hawaiian/Pacific Islander	0 (0%)
American Indian	3 (0%)
Other/Multiracial	870 (23%)

Education Level (Persons 25 & older) (ACS (American Community Survey)) - Persons (%)	
Less than 9th Grade	238 (8.94%)
9th through 12th Grade	277 (10.41%)

Income Breakdown (ACS (American Community Survey)) - Households (%)	
Less than $15,000	795 (50.48%)
$15,000 - $25,000	327 (20.76%)
$25,000 - $50,000	305 (19.37%)
$50,000 - $75,000	101 (6.41%)
Greater than $75,000	47 (2.98%)

Education Level (Persons 25 & older) (ACS (American Community Survey)) - Persons (%)	
High School Diploma	824 (30.95%)
Some College/2-year	343 (12.89%)
B.S./B.A. (Bachelor of Science/Bachelor of Arts) or More	778 (29.23%)

Detailed Facility Report

Facility Summary

WESTERN AUTO

2 LLORENS TORRES AVE, ARECIBO, PR 00612

FRS (Facility Registry Service) ID: 110031297291

EPA Region: 02

Latitude: 18.47046

Longitude: -66.7223

Locational Data Source: FRS

Industries: Repair and Maintenance

Indian Country: N

Enforcement and Compliance Summary

Statute	RCRA
Compliance Monitoring Activities (5 years)	--
Date of Last Compliance Monitoring Activity	--
Compliance Status	No Violation Identified
Qtrs in Noncompliance (of 12)	0
Qtrs with Significant Violation	0
Informal Enforcement Actions (5 years)	--
Formal Enforcement Actions (5 years)	--
Penalties from Formal Enforcement Actions (5 years)	--
EPA Cases (5 years)	--
Penalties from EPA Cases (5 years)	--

Regulatory Information

Clean Air Act (CAA): No Information

Clean Water Act (CWA): No Information

Resource Conservation and Recovery Act (RCRA): Active VSQG, (PRR000019513)

Safe Drinking Water Act (SDWA): No Information

Other Regulatory Reports

Air Emissions Inventory (EIS): No Information

Greenhouse Gas Emissions (eGGRT): No Information

Toxic Releases (TRI): No Information

Compliance and Emissions Data Reporting Interface (CEDRI): No Information

Go To Enforcement/Compliance Details

Known Data Problems <https://epa.gov/resources/echo-data/known-data-problems>

Facility/System Characteristics

Facility/System Characteristics

System	Statute	Identifier	Universe	Status	Areas	Permit Expiration Date	Indian Country	Latitude	Longitude
FRS		110031297291					N	18.47046	-66.7223
RCRAInfo	RCRA	PRR000019513	VSQG	Active (H)			N	18.469042	-66.720643

Facility Address

System	Statute	Identifier	Facility Name	Facility Address	Facility County
FRS		110031297291	WESTERN AUTO	2 LLORENS TORRES AVE, ARECIBO, PR 00612	Arecibo Municipio
RCRAInfo	RCRA	PRR000019513	WESTERN AUTO	2 LLORENS TORRES AVE, ARECIBO, PR 00612	Arecibo Municipio

Facility SIC (Standard Industrial Classification) Codes

System	Identifier	SIC Code	SIC Description

No data records returned

Facility NAICS (North American Industry Classification System) Codes

System	Identifier	NAICS Code	NAICS Description
RCRAInfo	PRR000019513	811111	General Automotive Repair

Facility Tribe Information

Reservation Name	Tribe Name	EPA Tribal ID	Distance to Tribe (miles)

No data records returned

Enforcement and Compliance

Compliance Monitoring History

Last 5 Years

Statute	Source ID	System	Activity Type	Compliance Monitoring Type	Lead Agency	Date	Finding (if applicable)

No data records returned

Entries in italics are not included in ECHO's Compliance Monitoring Activity counts because they are not compliance monitoring strategy <https://www.epa.gov/compliance/compliance-monitoring-programs> *activities or because they are not counted as inspections within EPA's Annual Results* <https://www.epa.gov/enforcement/enforcement-data-and-results>.

Compliance Summary Data

Statute	Source ID	Current SNC (Significant Noncompliance)/HPV (High Priority Violation)	Current As Of	Qtrs with NC (Noncompliance) (of 12)	Data Last Refreshed
RCRA	PRR000019513	No	08/09/2025	0	08/08/2025

Three-Year Compliance History by Quarter

Statute	Program/Pollutant/Violation Type		QTR 1	QTR 2	QTR 3	QTR 4	QTR 5	QTR 6	QTR 7	QTR 8	QTR 9	QTR 10	QTR 11
RCRA (Source ID: PRR000019513)			10/01-12/31/22	01/01-03/31/23	04/01-06/30/23	07/01-09/30/23	10/01-12/31/23	01/01-03/31/24	04/01-06/30/24	07/01-09/30/24	10/01-12/31/24	01/01-03/31/25	04/01-06/30/25
	Facility-Level Status		No Violation Identified	No Violation Identified	No Violation Identified	No Violation Identified	No Violation Identified	No Violation Identified	No Violation Identified	No Violation Identified	No Violation Identified	No Violation Identified	No Violation Identified
	Violation	Agency											

Informal Enforcement Actions

Last 5 Years

Statute	System	Source ID	Type of Action	Lead Agency	Date

No data records returned

Entries in italics are not counted as "informal enforcement actions" in EPA policies pertaining to enforcement response tools.

Formal Enforcement Actions

Last 5 Years

Statute	System	Law/ Section	Source ID	Type of Action	Case No.	Lead Agency	Case Name	Issued/ Filed Date	Settlements/ Actions	Settlement/ Action Date	Federal Penalty Assessed	State/ Local Penalty Assessed	Penalty Amount Collected	SEP Value	Comp Action Cost

No data records returned

Environmental Conditions

Watersheds

12-Digit WBD (Watershed Boundary Dataset) HUC (RAD (Reach Address Database))	WBD (Watershed Boundary Dataset) Subwatershed Name (RAD (Reach Address Database))	State Water Body Name (ICIS (Integrated Compliance Information System))	Beach Closures Within Last Year	Beach Closures Within Last Two Years	Pollutants Potentially Related to Impairment	Watershed with ESA (Endangered Species Act)-listed Aquatic Species?

No data records returned

Assessed Waters From Latest State Submission (ATTAINS)

State	Report Cycle	Assessment Unit ID	Assessment Unit Name	Water Condition	Cause Groups Impaired	Drinking Water Use	Ecological Use	Fish Consumption Use	Recreation Use	Other Use

No data records returned

Air Quality Nonattainment Areas

Pollutant	Within Nonattainment Status Area?	Nonattainment Status Applicable Standard(s)	Within Maintenance Status Area?	Maintenance Status Applicable Standard(s)
Ozone	No	--	No	--
Lead	Yes	Lead (2008)	No	--
Particulate Matter	No	--	No	--
Carbon Monoxide	No	--	No	--
Sulfur Dioxide	No	--	No	--

Pollutants

Toxics Release Inventory History of Reported Chemicals Released or Transferred in Pounds per Year at Site

TRI Facility ID	Year	Air Emissions	Surface Water Discharges	Off-Site Transfers to POTWs (Publicly Owned Treatment Works)	Underground Injections	Disposal to Land	Total On-Site Releases	Total Off-Site Transfers

No data records returned

Toxics Release Inventory Total Releases and Transfers in Pounds by Chemical and Year

Chemical Name

No data records returned

Community

Demographic Profile of Surrounding Area (1-Mile Radius)

This section provides demographic information regarding the community surrounding the facility. ECHO compliance data alone are not sufficient to determine whether violations at a particular facility had negative impacts on public health or the environment. Statistics are based upon the 2022 American Community Survey (ACS) 5-year Summary and are accurate to the extent that the facility latitude and longitude listed below are correct. Census boundaries and demographic data for U.S. Territories are based on the "2020 Island Areas Demographic Profiles" from the U.S. Census Bureau. EPA's spatial processing methodology considers the overlap between the selected radii and ACS census block groups in determining the demographics surrounding the facility. For more detail about this methodology, see the DFR Data Dictionary <https://epa.gov/help/reports/dfr-data-dictionary#demographic>.

General Statistics (ACS (American Community Survey))	
Total Persons	7,475
Population Density	3,921/sq.mi.
Housing Units in Area	4,391
Percent People of Color	100%
Households in Area	3,124
Households on Public Assistance	250
Persons With Low Income	6,540
Percent With Low Income	89%

Geography	
Radius of Selected Area	1 mi.
Center Latitude	18.47046
Center Longitude	-66.7223
Total Area	3.121 sq.mi.
Land Area	61%
Water Area	39%

Income Breakdown (ACS (American Community Survey)) - Households (%)	
Less than $15,000	1,788 (57.22%)
$15,000 - $25,000	552 (17.66%)
$25,000 - $50,000	566 (18.11%)
$50,000 - $75,000	156 (4.99%)
Greater than $75,000	63 (2.02%)

Age Breakdown (ACS (American Community Survey)) - Persons (%)	
Children 5 years and younger	462 (6%)
Minors 17 years and younger	1,721 (23%)
Adults 18 years and older	5,754 (77%)
Seniors 65 years and older	1,628 (22%)

Race Breakdown (ACS (American Community Survey)) - Persons (%)	
White	2,616 (35%)
African-American	167 (2%)
Hispanic-Origin	7,405 (99%)
Asian	136 (2%)
Hawaiian/Pacific Islander	0 (0%)
American Indian	1 (0%)
Other/Multiracial	1,736 (23%)

Education Level (Persons 25 & older) (ACS (American Community Survey)) - Persons (%)	
Less than 9th Grade	657 (12.73%)
9th through 12th Grade	518 (10.03%)
High School Diploma	1,806 (34.99%)
Some College/2-year	525 (10.17%)
B.S./B.A. (Bachelor of Science/Bachelor of Arts) or More	1,231 (23.85%)

RCRAInfo Facility

Facility Information

US POSTAL SERVICE USPS
ARECIBO PUEBLO STATION
Handler ID: PRP000975266
CARR 10 KM 8.7
ARECIBO, PR 00612
County Name: ARECIBO
Latitude: 18.469811
Longitude: -66.715565
Hazardous Waste Generator:
Owner Name:

BIENNIAL REPORT SUMMARY

No Biennial Report data is available for the facility listed above.

LIST OF FACILITY CONTACTS

NAME	STREET	CITY	STATE

HANDLER / FACILITY CLASSIFICATION

Unspecified Universe for the facility listed above.

HANDLER TYPE
Not in a universe

LIST OF PROCESS UNIT INFORMATION FOR GROUP

<https://epa.gov/envirofacts/metadata/table/rcra/rcr_pm_unit>

No Process Information is available for the facility listed above.

LIST OF NAICS CODES AND DESCRIPTIONS

NAICS CODE	NAICS DESCRIPTION
491110	POSTAL SERVICE

LIST OF WASTE CODES AND DESCRIPTIONS

No Waste Codes are available for the facility listed above.

Contact Us <https://www.epa.gov/enviro/forms/contact-us-about-envirofacts> to ask a question, provide feedback, or report a problem.

Last updated on August 11, 2025

CMC Environmental Consultants

ENVIRONMENTAL INSPECTION FOR ASBESTOS CONTAINING MATERIALS

PROJECT: REVITALIZATION OF LUIS MUÑOZ RIVERA PLAZA IN THE URBAN CENTER OF ARECIBO IN THE MUNICIPALITY OF ARECIBO, PUERTO RICO.

Prepared for:
Iglesia-Vazquez & Associates
320 Fortaleza Street 2nd floor
Old San Juan, San Juan, Puerto Rico 00902

Prepared by:
CMC Environmental Corp.
P.O. Box 29702 – 65th Infantry Station
San Juan, Puerto Rico 00929-0702.
cmcenvironmental@live.com

October, 2023

TABLE OF CONTENTS

TABLE OF FIGURES ----------3

TABLE OF TABLES----------4

LIST OF APPENDICES---------- 5

SECTION 1: Introduction----------6

1.1 Project Description---------- 6

SECTION 2: Asbestos Containing Building Material Inspection Report----------6

2.1 Overview the Evaluation---------- 6
2.2 Inspection Sampling Methodology----------6-7
2.3 Results----------8
2.4 Conclusion and Recommendations----------8
2.5 Condition and Limitation Disclaimer---------- 8
2.6 Report Certification----------8

SECTION: 3 Appendices

Appendix 1 Certifications, Licenses, Accreditation----------9
Appendix 2 Certification of no asbestos Presence form OGPE PGC-009----------10
Appendix 3 Project Pictures----------11-14
Appendix 4 Existing floor & demolition plan----------15

TABLE OF FIGURES

This page was left intentionally in blank because no figures were including in this report

TABLE OF TABLES

TABLE # 1 Asbestos Regulatory Levels---------- 8

LIST OF APPENDICES

Appendix 1 Certifications, Licenses, Accreditation
Appendix 2 Certification of no asbestos Presence form OGPE PGC-009
Appendix 3 Project Pictures
Appendix 4 Existing floor & demolition plan

1.0 INTRODUCTION

An Environmental investigation for asbestos containing materials (ACM) was conducted by CMC Environmental Corp at Luis Muñoz Rivera Plaza in the Municipality of Arecibo, Puerto Rico. To identify an access suspected asbestos containing materials. (ACM) as part of revitalization project.

The asbestos investigation was conducted on October 5, 2023 by a Department of Natural and Environmental Resources of P.R. (DNER) Certified Asbestos Inspector Carlos M. Carrion Certification # ASB-1122-0442-SI to identified suspected materials that contain asbestos fiber above regulatory levels of 1% fiber per cubic centimeter (f/cc) and assist with the compliance of local and federal regulations.

1.1 PROJECT DESCRIPTION

The project consists in the evaluation of the construction material of the aforementioned project that included visual inspection, sampling, analysis, and physical assessment, if necessary, of suspected asbestos containing material (ACM) present in the project as part of the Scours Evaluation Countermeasure Design for Bridges. During the inspection through the site no asbestos suspected material was identified for ACM. To support conclusion of this report, Refer to pictures in the appendix # 3.

NOTE: Samples are defined to be asbestos containing if total asbestos fibers content from PLM analysis is greater than 1% f/cc.

2.0 ASBESTOS CONTAINING MATERIAL INSPECTION REPORT

The objective of the asbestos investigation is to determine the presence of asbestos containing materials at the before mentioned project and assist in the compliance with the local and federal regulations prior to the demolition, repairs or rehabilitation works.

The mere presence of asbestos containing materials (ACM) and the potential for disturbance due to structure demolition or other activities create fiber release episodes in to the environment that constitute a potential health hazard. Appropriate work practices or procedures for the control of emission and exposure are required by Federal and Local regulations

2.1 OVERVIEW THE EVALUATION

This asbestos containing material inspection is to identified the location of any Asbestos Containing Material (ACM) that exist within. Our scope of work (SOW) for this project consisted of the following task:

- A walk-though and visual inspection of the structure in order to detect the presence of any suspected material
- Perform an inventory of suspected ACM if applicable
- Bulk samples shall be collected from each homogeneous area within the project site if suspected material is observed (ACM).
- Polarized Light Microscopy (PLM) Analysis will be used to recognize and identify samples containing ACM.
- Final Inspection Report

The inspection was conducted with inspectors accredited by the Department of Natural and Environmental Resources (DNER) of Puerto Rico and U.S Environmental protection Agency (EPA) with experience, education and training in the recognition of potential ACM and approves bulk samples techniques.

The inspection was performance in accordance with U.S Environmental protection Agency recommended procedures found in EPA-450/2-78-014 (Parts I and II), EPA 560/5-85-024 and 40 CFR 763, These procedures call for the visual inspection of the building for suspect friable material collection and analysis of representative's samples of suspected materials. The EPA Asbestos National Emission Standards for Hazards Pollutants (NESHAP) Standard define friable ACM as any material containing over one percent (>1%) by weight of any type of asbestos mineral form that when dry, can be crumbled, pulverized, or reduced to powder by hand pressure. Non friable is any material that contain over one percentage (>1%) by weight of any type of asbestos mineral form and cannot be crumbled, pulverized, or reduced by hand pressure

2.2 SAMPLING METHODOLOGY

An initial inspection is carried out in the project site to identify the presence of any suspected material in the structure. If any ACM is not presence, no further action is required. However, if asbestos is detected, samples must be collected following EPA Procedures.

Upon complete of the functional space inspection, bulk samples were collected of the suspect ACM and grouped into homogeneous sampling areas (areas which are uniform in color texture, general appearance and construction/application date).

When samples of homogeneous material are collected, they are labeled and transported for analysis. Each type of asbestos displays a unique property when subject to PLM. Properties are unique to crystalline asbestos form and therefore can be used to identify the type of asbestos mineral as chrysotile, amosite, crocidolite, anthophyllite, tremolite and actinolite.
Percentage of each asbestos mineral type is determined by visual estimation, by mixing the samples thoroughly to provide more accurate percentage. Any material containing over one percentage (>%) by weight of any type of asbestos mineral form is considered by the US Environmental Agency (EPA) to be asbestos containing material and if disturbed it must be handled according to specific State and Federal Regulations.

A physical assessment of the suspected ACM was performed based on AHERA regulation. Since this protocol does not provide a method for relative ranking of individual hazards within the AHERA categories for the three types of ACM (Surfacing, Thermal Insulation and Miscellaneous). A separate analysis was performing as to determine the hazard assessment combines the level of potential for disturbance with the condition of the ACM. To indicate overall hazard potential the ranking for hazard potential ranges from 1 most hazardous to 7 least hazardous. The highest rank is reserved for the ACBM which is significantly damage hazard 2-4 indicate Which are damages with rank 2 indicating for significant damage and rank 3 indicating a potential of damage Hazard ranking 5-7 are reserved for ACBM in good condition.

Table # 1

Asbestos Regulatory Level
Asbestos Containing Material (ACM) >1% f/cc 40 CFR sec.763.83

Any Collected asbestos bulk samples will be submitted for standard turnaround time analysis to an accredited laboratory with Proficiency by the National Institute of science and Technology NVLAP program for bulk samples asbestos analysis. The Method of analysis will be Polarized Light Microscopy with dispersion staining as recommended by US Environmental Agency (EPA).

2.3 RESULTS

During the asbestos inspection of Luis Muñoz Rivera Plaza construction material evaluated was not identified for suspected asbestos material in the project.

2.4 CONDITIONS AND LIMITATION DISCLAIMER:

CMC Environmental has performed this investigation in a thorough and professional manner consistent with commonly accepted industry standards and practices. The preparer cannot guarantee and does not warrant that this evaluation has identified all adverse environmental factor and/ or conditions affecting this property on date of the evaluation.

The results reported and conclusions reached by the preparer are solely for the benefit of the owner. The results and opinions in this report, based solely on the conditions found at the project on the date of the evaluation, are valid only on that date. The preparer assumes no obligation to advise the client of any changes in any real or potential asbestos hazard at the project evaluated beyond the date of the inspection evaluation.

2.5 CONCLUSION AND RECOMMENDATIONS

A complete visual inspection conducted at the project site, pursuant to the requirements of AHERA (40 CFR 763 subpart E) and USEPA guidance demonstrate that no ACM is present in the area after evaluating Luis Muñoz Rivera Plaza in the Municipality of Arecibo, Puerto Rico. Therefore, no samples of suspected materials containing asbestos was collected at the project-No Further action required

2.6 REPORT CERTIFICATION

CMC Environmental Corp Certify that this asbestos inspection report has been made according to the requirements and /or protocols of the Department of Natural and Environmental Resources of Puerto Rico (DNER) and Federal Agencies.

Carlos M. Carrión, DNER Asbestos Inspector
DNER Cert #. # ASB-1122-0442-SI.

APPENDIX # 1

CERTIFICATION, LICENSES, ACCREDITATION

ASB-1122-0442-SI

Número de Registro

7-nov-2023

Fecha de vencimiento

TARJETA DE REGISTRO
PARA LA REMOCION DE ASBESTO

Esta tarjeta autoriza a:

Carlos Carrión Montalvo

Inspector

A trabajar en la remoción de asbesto en Puerto Rico. Esta persona NO es un empleado del DRNA.

Firma Autorizada - Departamento Recursos Naturales y Ambientales

APPENDIX # 2

CERTIFICATION OF ASBESTOS NO PRESENCE OGPE-FORM PGC-009

GOBIERNO DE PUERTO RICO
OFICINA DEL GOBERNADOR
JUNTA DE CALIDAD AMBIENTAL

Area de Calidad de Agua

OGPe
Oficina de Gerencia de Permisos

Forma PGC-009

CERTIFICACION DE NO PRESENCIA DE ASBESTO EN ESTRUCTURAS A DEMOLERSE

(Deberá completarse en letra de molde o impresa)

PGC-_____
PARA USO OFICIAL

Yo, Carlos M. Carrión Montalvo (Nombre), mayor de edad, Casado (Estado Civil), y vecino de Carolina (Municipio)

Dirección Postal PO Box 29702, San Juan, PR (Pueblo) 00929 (Zip Code)

Teléfonos: Residencial (_____) _____ - _____ Oficina (939) 940 - 4859 Ext._____
Fax (_____) _____ - _____

Certifico que:

1. La estructura de la Plaza Publica Luis Muñoz Rivera en Arecibo el Municipio de Arecibo, P.R. la cual será objeto de una revitalización se encuentra libre de asbesto.
2. La información antes indicada es cierta y correcta.
3. Afirmo y reconozco las consecuencias de incluir y someter información falsa en este documento.
4. Para que así conste, firmo la presente certificación en Carolina, (Municipio) Puerto Rico,

Hoy día 5 de noviembre de 2023.

_____
Firma y Sello del Profesional o
Firma del Inspector de Asbesto registrado por la JCA (Original)

Nota: Ingenieros o Arquitectos deberán someter evidencia de que se encuentra al día en el pago de sus cuotas de colegiación e Inspectores de Asbesto deberán someter evidencia de la tarjeta de registro provista por la JCA.

Dirección Física: Ave. Ponce de León 1308, Carr. Estatal 8838, Sector el Cinco, Rio Piedras, PR 00926
Dirección Postal: Apartado 11488, Santurce, PR 00910-1488
Tel. (787) 767-8181 • Fax (787) 767-1962

PUERTO RICO VERDE

APPENDIX # 3

PROJECT PICTURES

LUIS MUÑOZ RIVERA PLAZA ARECIBO, P.R

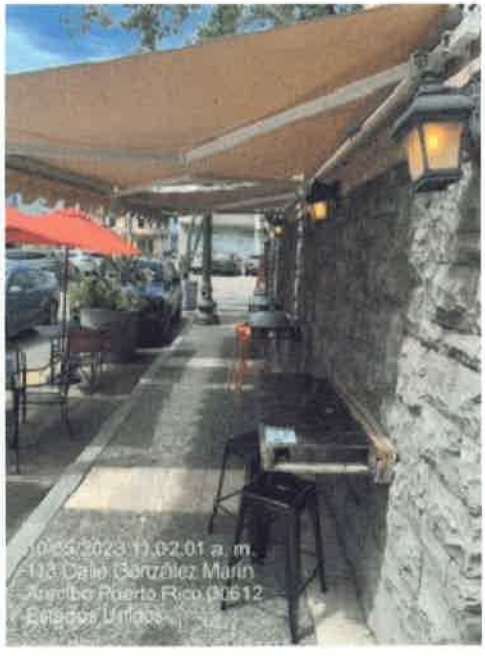

Plaza Alcaldía Arecibo

APPENDIX # 4

EXISTING FLOOR & DEMOLITION PLAN

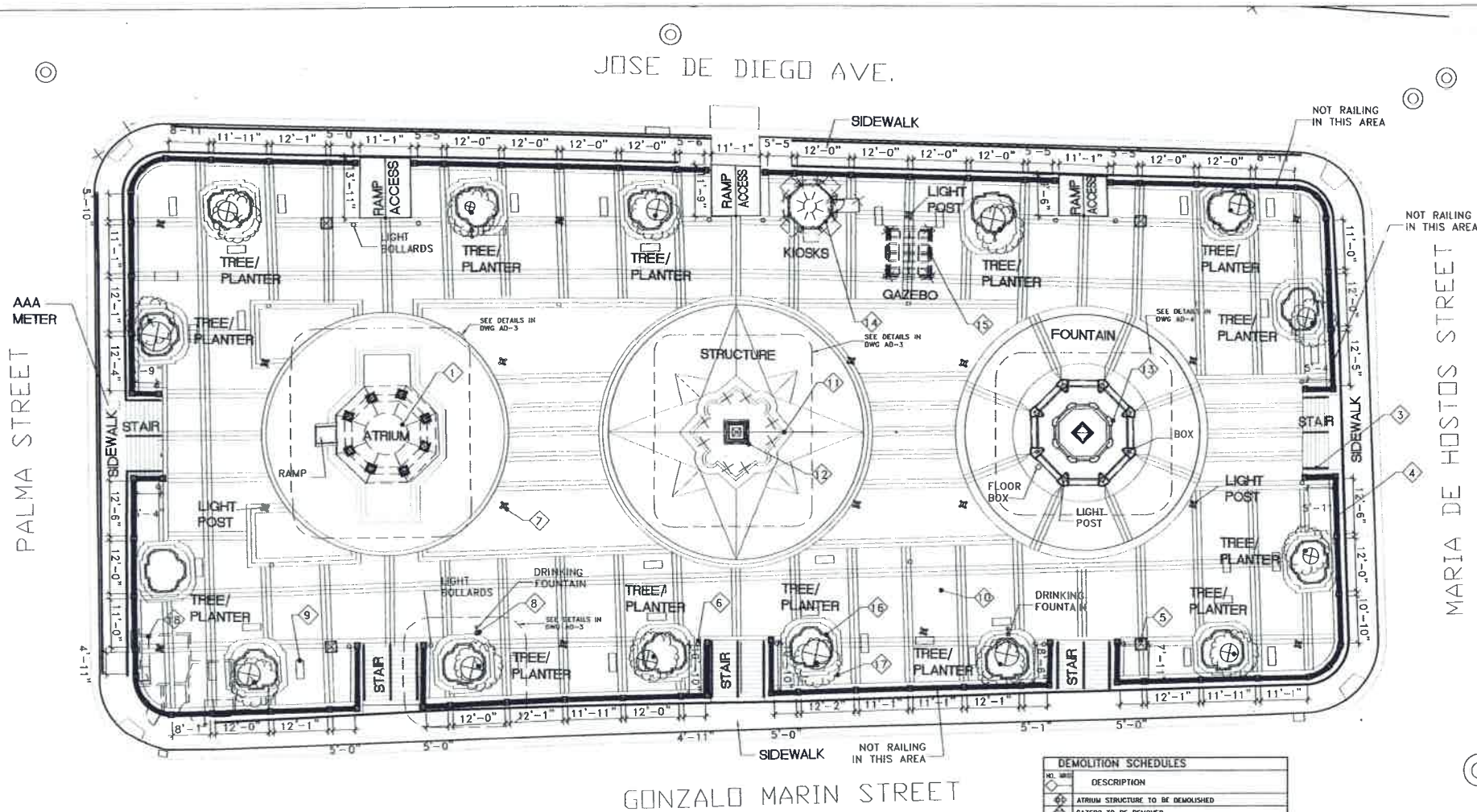

EXISTING AND DEMOLITION PLAZA FLOOR PLAN
SCALE: 3/32"=1'-0"

DEMOLITION SCHEDULES	
NO.	DESCRIPTION
	ATRIUM STRUCTURE TO BE DEMOLISHED
	GAZEBO TO BE REMOVED
	STAIR RAILING AND FRAMED TO BE REMOVED
	GRILLES RAILING AND COLUMN TO BE REMOVED
	CONCRETE MONUMENT TO BE REMOVED
	LIGHT BOLLARDS TO BE REMOVED
	LIGHT POST TO BE REMOVED
	DRINKING FOUNTAIN TO BE REMOVED
	BENCH TO BE REMOVED
	FLOOR FIN. TO BE REMOVED W/ NEW FLOOR TILES
	CONCRETE LOW WALL TO BE DEMOLISHED
	STRUCTURE OF THE CENTER TO REMAIN AND BE RESTORED
	FOUNTAIN AND WALL TO BE DEMOLISHED
	KIOSKS TO BE DEMOLISHED
	GAZEBO TO BE DEMOLISHED
	PLANTER RO BE DEMOLISHED
	TREE TO REMAIN
	ELECTRICAL ROOM TO BE REMODELED

NOTE:
1. THE CONTRACTOR WILL DISPOSE OF ALL THE EQUIPMENT REMOVED, WILL BE DELIVERED TO THE MUNICIPALITY.
2. FOR STRUCTURES DETAILS SEE DWG. AD-3,4.

DATE	REVISIONS

REVITALIZATION OF
LUIS MUÑOZ RIVERA PLAZA
IN THE URBAN CENTER
ARECIBO, PUERTO RICO

IGLESIAS • VAZQUEZ and ASSOCIATES
ENGINEERS · ARCHITECTS · PLANNERS
350 FORTALEZA STREET 2nd FLOOR SAN JUAN, PUERTO RICO 00902 TELS. 721-1545 721-1546

SHEET TITLE:
EXISTING AND DEMOLITION
PLAZA FLOOR PLAN
SCALE: AS SHOWN

CODE NO:
08-903-

DRAWING NO:
AD-1

SHEET NO:
OF
00

N:\Proj\ARECIBO\903 PLAZA ARECIBO\FINAL Plots\903-903AD-1.dwg

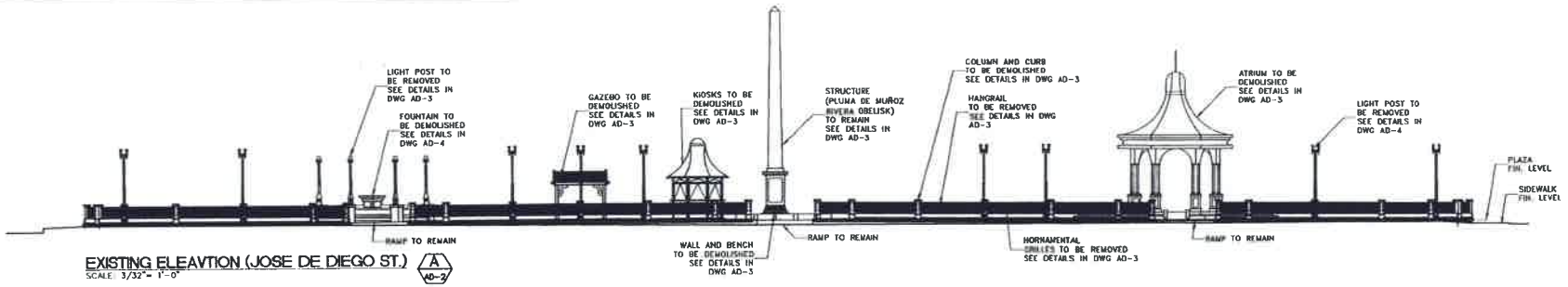

EXISTING ELEAVTION (JOSE DE DIEGO ST.) A AD-2
SCALE: 3/32"= 1'-0"

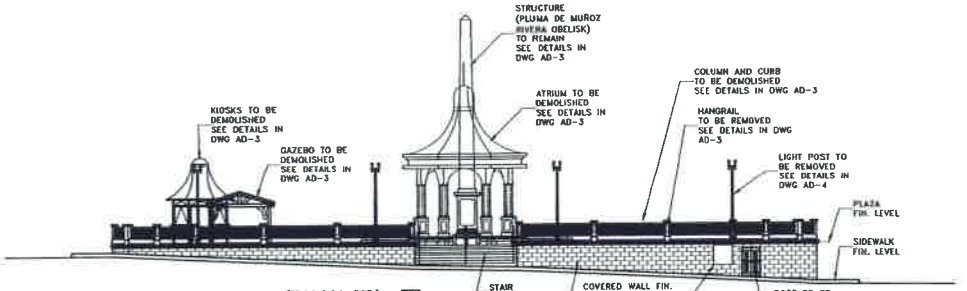

EXISTING ELEAVTION (PALMA ST.) A AD-2
SCALE: 3/32"= 1'-0"

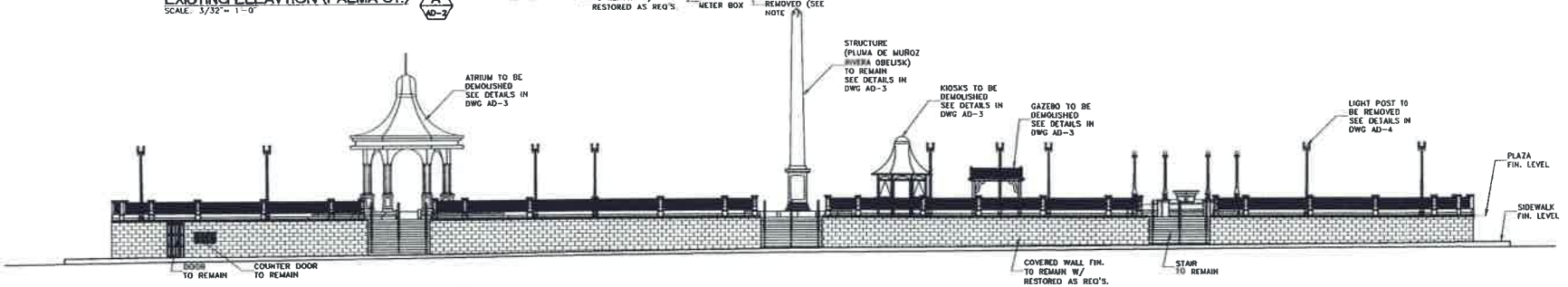

EXISTING ELEAVTION (GONZALEZ MARIN ST.) A AD-2
SCALE: 3/32"= 1'-0"

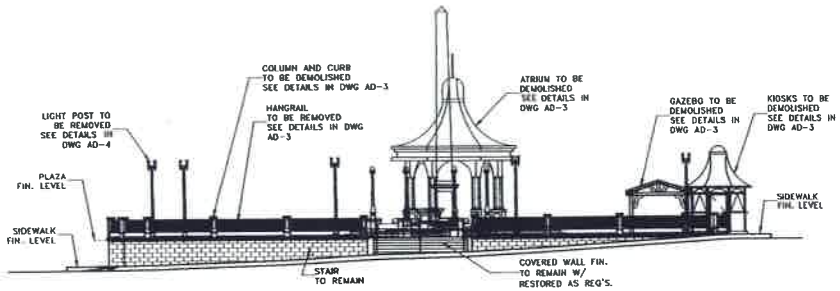

EXISTING ELEAVTION (MARIA DE HOSTOS ST.) A AD-2
SCALE: 3/32"= 1'-0"

REVITALIZATION OF LUIS MUÑOZ RIVERA PLAZA IN THE URBAN CENTER ARECIBO, PUERTO RICO

IGLESIAS • VAZQUEZ and ASSOCIATES
ENGINEERS · ARCHITECTS · PLANNERS
350 FORTALEZA STREET 2nd FLOOR SAN JUAN, PUERTO RICO 00901 TELS. 721-4545 721-4540

SHEET TITLE: EXISTING ELEVATION
SCALE: AS SHOWN

CODE NO: 08-903-
DRAWING NO: AD-2
SHEET NO: OF 00

DATE	REVISIONS

N:\PROJECTS\ARECIBO\903 PLAZA ARECIBO\FINAL 903\903AD-1.dwg

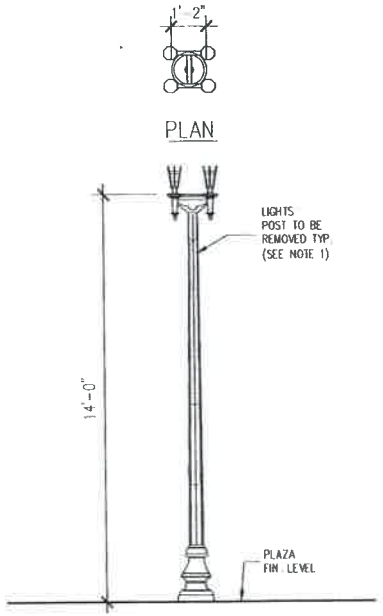

PLAZA LIGHT POLE DETAILS
SCALE: 1/2"=1'-0"

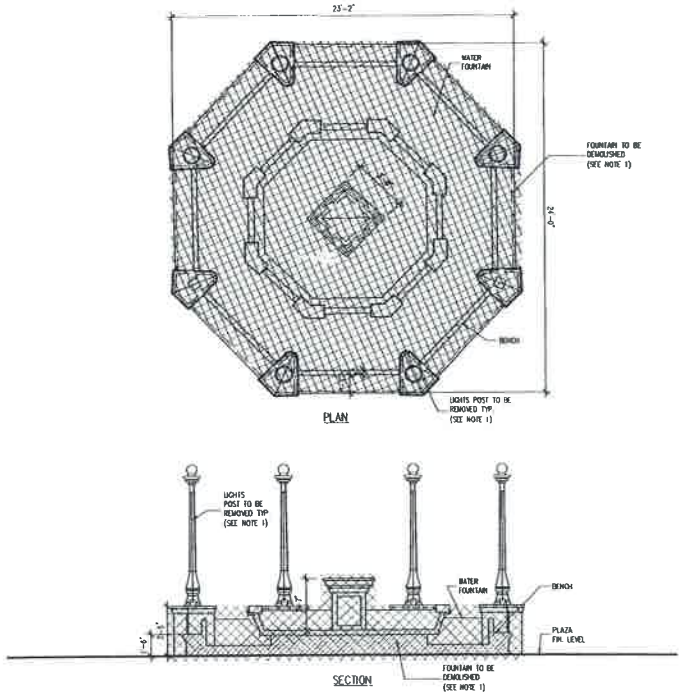

FOUNTAIN DETAILS
SCALE: 1/4"=1'-0"

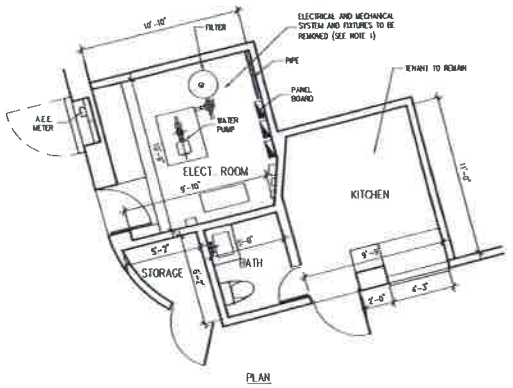

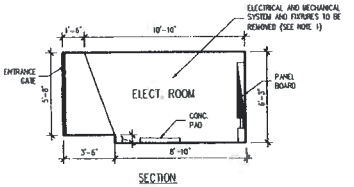

ELECTRICAL ROOM AND KIOSKS DETAILS
SCALE: 1/4"=1'-0"

REVITALIZATION OF LUIS MUÑOZ RIVERA PLAZA IN THE URBAN CENTER
ARECIBO, PUERTO RICO

IGLESIAS • VAZQUEZ and ASSOCIATES
ENGINEERS • ARCHITECTS • PLANNERS
235 FORTALEZA STREET 2nd FLOOR SAN JUAN, PUERTO RICO 00902 TELS. 721-4545 721-1244

SHEET TITLE:
PLAZA MISCELLANEOUS DETAILS
SCALE: AS SHOWN

CODE NO:
08-903-

DRAWING NO:
AD-3

SHEET NO:
OF
00

DATE	REVISIONS

N:\proj\ARECIBO\903 PLAZA ARECIBO\FINAL 90S\903-903AD-1.dwg

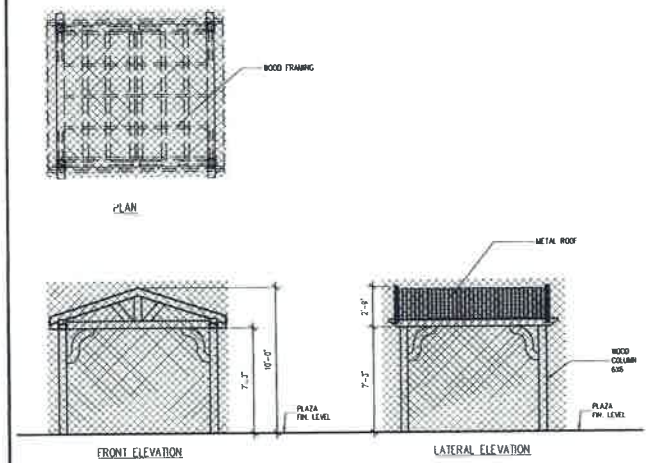

GAZEBO DETAILS
SCALE: 1/4"=1'-0"

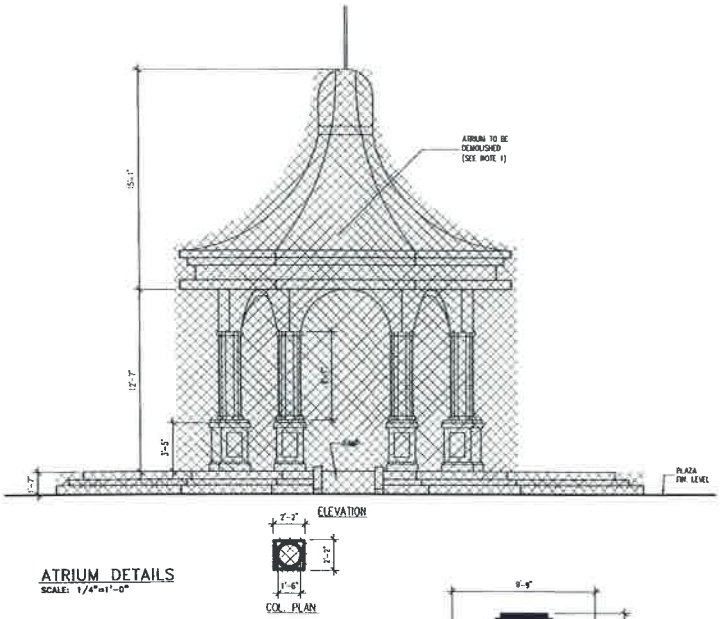

ATRIUM DETAILS
SCALE: 1/4"=1'-0"

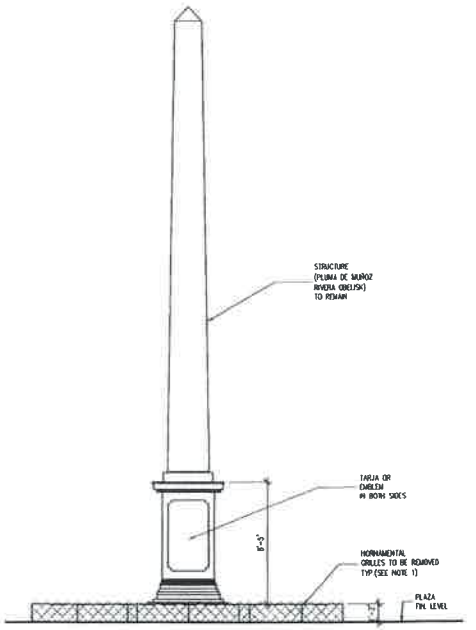

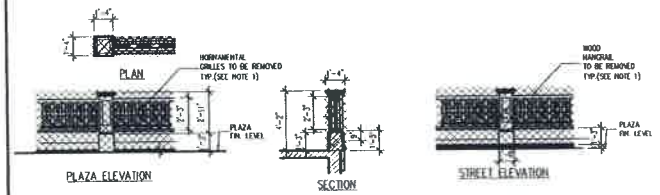

RAILING FLOOR PLAN
SCALE: 1/4"=1'-0"

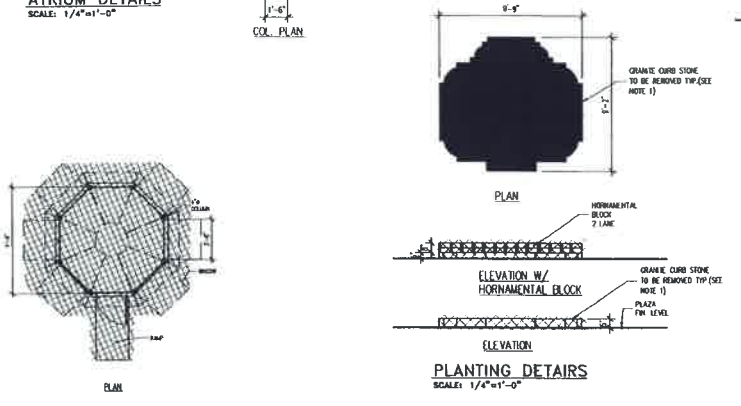

PLANTING DETAIRS
SCALE: 1/4"=1'-0"

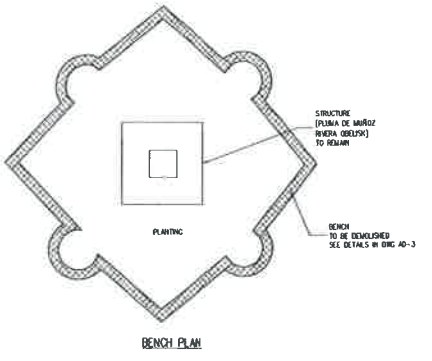

STRUCTURE DETAIRS
SCALE: 1/4"=1'-0"

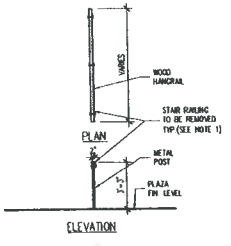

STAIR RAILING DETAILS
SCALE: 1/4"=1'-0"

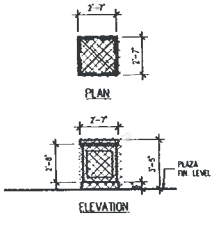

CONCRETE BOLLAR DETAILS
SCALE: 1/4"=1'-0"

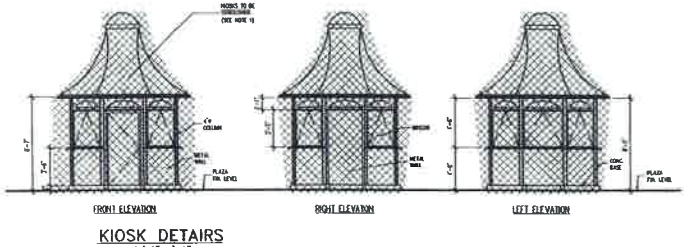

KIOSK DETAIRS
SCALE: 3/16"=1'-0"

REVITALIZATION OF
LUIS MUÑOZ RIVERA PLAZA
IN THE URBAN CENTER
ARECIBO, PUERTO RICO

IGLESIAS•VAZQUEZ and ASSOCIATES
ENGINEERS · ARCHITECTS · PLANNERS

SHEET TITLE:
PLAZA MISCELLANEOUS DETAILS
SCALE: AS SHOWN

CODE NO:
08-903-

DRAWING NO:
AD-4

DATE	REVISIONS

SHEET NO:
OF
00

CMC Environmental Consultants

ENVIRONMENTAL INSPECTION FOR LEAD BASED PAINT

PROJECT: REVITALIZATION OF LUIS MUÑOZ RIVERA PLAZA IN THE URBAN CENTER OF ARECIBO IN THE MUNICIPALITY OF ARECIBO, PUERTO RICO.

Prepared for:
Iglesia-Vazquez & Associates
320 Fortaleza Street 2nd floor
Old San Juan, San Juan, Puerto Rico 00902

Prepared by:
CMC Environmental Corp.
P.O. Box 29702 – 65th Infantry Station
San Juan, Puerto Rico 00929-0702.
cmcenvironmental@live.com

October, 2023.

TABLE OF CONTENTS

TABLE OF FIGURES----------3

TABLE OF TABLES---------- 4

LIST OF APPENDICES---------- 5

SECTION 1: Introduction---------- 6

1.1 Project Description----------6

SECTION 2: INSPECTION REPORT SUMMARY----------6

2.1 Overview of Evaluation----------6
2.2 Equipment Information---------- 7
2.3 Sampling Procedures and Results Presentation---------- 7
2.4 Table of Regulatory Levels----------8
2.5 Sampling Methodology and Analysis---------- 8
2.6 Condition and Limitations- Disclaimer----------8
2.7 Lead Based Paint Testing Methodology----------8
2.8 XRF Results---------- 8
2.9 Abatement Conditions----------9
2.10 Conclusion & Recommendations----------9
2.11 LBP Report Certification----------9

SECTION 3: Appendices: ----------10

Appendix A. Certification Licenses, Accreditations----------10
Appendix B. Lead Based Paint Testing Form---------- 11
Appendix C. Calibrations Form----------12-13
Appendix D XRF Performance Characteristic Sheet PCS---------- 14
Appendix E. Representatives Pictures of positives components----------15-16
Appendix F. Existing and demolition floor plan----------17

TABLES OF FIGURES

This page was left intentionally in blank because no figures were including in this report

TABLES OF TABLES

Table 1 Summary of Positive Components----------6
Table 2 Lead Regulatory Levels ---------- 8

LIST OF APPENDICES

Appendix A. Certification Licenses, Accreditations----------10
Appendix B. Lead Based Paint Testing Form---------- 11
Appendix C. Calibrations Form----------12-13
Appendix D XRF Performance Characteristic Sheet PCS----------14
Appendix E. Representative pictures of positive components----------15-16
Appendix F. Existing and demolition floor plan---------- 17

1.0 INTRODUCTION

An environmental lead-based paint inspection was conducted by CMC Environmental on October 5, 2023 at Luis Muñoz Rivera Plaza in the Municipality of Arecibo Puerto Rico. As part of revitalization project. The lead-based paint inspection was conducted by Carlos M Carrion Certified by The Department of Natural and Environmental Resources (DNER) of Puerto Rico using an RMD LPA-1 X Ray Analyzer (XRF) serial # 2526 and consisted an identify paint that contain lead-based paint above allowable levels and help with the compliance of local and federal regulations.

1.1 PROJECT DESCRIPTION

The lead-based paint inspection was conducted to evaluated, access and identify all painted surfaces such guardrails, light pole, floor walls, stair, benches etc. using a RMD LPA-1 XRF Analyzer and following the methodology conforming to Department of Housing and Urban Development (H.U.D) inspection protocol Chapter 7 revised in 2012 and the Department of Natural and Environmental Resources of P.R. (DNER) Rule for Proper Management of Lead Based Paint activities # 9098 July 16, 2019.

The evaluation found that lead based paint painted surfaces above regulatory limits were present at site on the date of inspection. For the evaluation criteria used by the inspector/Risk Assessor refer section 2.2 and 2.3 of this report.

For the detailed analytical testing results for each material components refer to the XRF testing results in the appendix B of this report (Lead Based Paint Testing Form).

2.0 INSPECTION REPORT SUMMARY

Table # 1

Sampling Area	Components	Location	Color	Substrate	Quantities
Plaza-Stair	Handrails	Exterior	Brown	Metal	250 LF approx.

***The quantities of positives materials presented in this table is only an approximately estimate the contractor shall be estimated the amount of material to be removed with the owner or its representatives.**

2.1 OVERVIEW OF THE EVALUATION

The lead-based paint inspection is an investigation to identify all lead-based paint on a surface-by-surface basis. CMC Environmental Corp were inspected this project utilizing the U.S. Housing and Urban Development (H.U.D.) inspection protocols revised (2012), U.S Environmental Protection Agency (EPA) and The Proper Management of Lead Based Paint Activities # 9098 of the June 16, 2019 established by Puerto Rico Department of Natural and Environmental Resources (DNER).

Averages of Two hundred thirty-nine (239) samples were taken at identified selective surfaces of the evaluated areas using Xray fluorescence (XRF) analyzer. The evaluation found that lead based paint was present in selectively components and surfaces identified through the site project on the date of the inspection.

Lead based paint inspection was performed by E.P.A. Model trained lead-based paint inspector/ risk assessor Carlos M. Carrion, Certified by Department of Natural and Environmental Resources of Puerto Rico (DNER), utilizing RMD LPA-1 Analyzer serial # 2526 the credential is provided in Appendix #1 (Certification, Licenses and Accreditations).

The RMD LPA-1 XRF analyzer is designed to measure the lead of surface coating on a variety of surfaces, substrates and components the measure is rapid and non- destructive and according to the manufacturer, is capable of detecting lead concentration that occur within numerous layers of various surface coatings.

2.2 EQUIPMENT INFORMATION

XRF Spectrum Analyzer- LPA-1 Inspection System by RMD
X Ray Source- Co 57 (10mci)
Serial Number 2526

2.3 SAMPLING PROCEDURES AND RESULTS PRESENTATION

The lead-based paint sampling procedures was design to evaluate and document all data obtained in the investigation in a sequential method that provided confidence at the moment of the results presentation.

The Lead Based Paint inspection was conducted following the U.S Department of Housing (H.U.D.) established in the Guidelines for the Evaluation and Control of Lead Based Paint in Housing (2012) and the Department of Natural and Environmental Resources (DNER) of Puerto Rico. The Proper Management of Lead Based Paint activities # 9098 of the June 16, 2019.

The U.S. Department of Housing (HUD) and U.S. Environmental Protection Agency (EPA) has defined lead-based paint as containing 1.0 mg/cm^2 or more lead when analyzed by the XRF. The surfaces evaluation was performed as follow:

The standard operating procedure for XRF testing was performed as follows:

If lead concentration measured by XRF florescence Analyzer is less than (1.0 mg/ cm ^{2}) the result is considered negative.

If the lead concentration measured by XRF florescence Analyzer is equal or greater than 1.0 mg / cm^2 the result is considering positive.

Inconclusive reading is generated from lead concentration measured by LPA-1 Lead Analyzer, except for metal substrate as per PCS for RMD is .8 to .9 mg/cm^2

The lead regulatory levels provided below are those used when preparing this lead-based paint evaluation or when evaluating data collected. The EPA regulatory levels are the same as the state regulatory levels provided in the following table.

2.4 Table # 2 Lead Regulatory Levels:

	HUD-EPA-DNER Levels
Lead Based Paint	1.0mg/cm² or 0.5% by weight or 5,000ppm

2.5 SAMPLING METHODOLOGY AND ANALYSIS

A representative surface of each area with different paint covering and different surfaces were tested, (i.e., road lines, parapets, columns, beam wall barrier, etc.).

No paint chips samples were collected for laboratory analysis no lead measurements were inconclusive. Reading recorded on LBP Testing Data Sheet that contains a brief description of the area sampled per areas.

A full description of components types, substrate, color, location and XRF reading by the spectrum analyzer is provided for each area tested.

2.6 CONDITIONS AND LIMITATION DISCLAIMER

CMC Environmental has performed this investigation in a thorough and professional manner consistent with commonly accepted industry standards and practices. The preparer cannot guarantee and does not warrant that this evaluation has identified all adverse environmental factor and/ or conditions affecting this property on date of the evaluation.

The results reported and conclusions reached by the preparer are solely for the benefit of the owner. The results and opinions in this report, based solely on the conditions found at the property (project) on the date of the evaluation, are valid only on that date. The preparer assumes no obligation to advise the client of any changes in any real or potential lead hazard at the structures evaluated beyond the date of the inspection report.

2.7 LEAD BASED PAINT TESTING METHODOLOGY

The hazard level of Lead Based Paint has been determined by the Department of Housing & Urban Development as 1.0 mg/cm² as measured by XRF or AAS (Atomic Absorption Spectroscopy) or 0.5% by weight (or 5000 PPM) as measured by AAS or Induct Coupled plasma (ICP). The same level was adopted by Environmental Protection Agency (E.P.A.) Regulation Published in 1992, under Title X, the only Lead Based Paint testing protocol officially available at this time was published by Housing and Urban Development (HUD). Initially in 1990, revised in 1991 and finalized in 1995. A revised chapter VII was published in 1997 and revised 2012 In accordance to new protocol almost all surface present in the units have to be tested the above guidelines were used to perform Lead Based Paint testing for this project.

2.8 XRF RESULTS

Refers to XRF lead based paint testing form for the detailed analytical testing results for each distinct areas inspected in table # 1 and appendix #B.

2.9 ABATEMENT CONDITIONS

Abatement is defined by HUD and the Department of Natural and Environment Resources (DNER) of Puerto Rico, means any set of measures designed to eliminate lead-based paint and/or lead based paint hazards permanently. The People providing these services must to be trained in accordance with DNER licensing /certification requirements product manufacturer and/or contractor must warrant abatement methods to last a minimum of Twenty (20) years or these methods must have design life at least 20 years.
Abatement activities may include, but are not necessarily limited to:

- On-site or off-site removal of lead-based paint (LBP) from substrate and components
- Replacement of components or fixtures painted with lead-based paint (LBP).
- Permanent enclosure of lead-based paint (LBP) with construction materials mechanically fastened to the substrate.
- Encapsulation of lead-based paint with specially designed encapsulant products.
- Removal or permanent covering (concrete or asphalt) of soil lead based paint hazards.

If enclosure or encapsulation is conducted as an abatement method, the lead-based paint remains on the property, so ongoing paint maintenance plan is required.

2.10 CONCLUSION AND RECOMMENDATIONS

According to the Department of Natural and Environmental Resources (DNER) lead regulations, prior to the demolishing or disturb components containing lead-based paint, the contaminated surfaces or substrates must be abated or removed. The waste generated has to be characterized to determine if the waste generated is hazardous or non-hazardous waste. The firm providing the abatement services must be certified as an abatement firm by the DNER. Workers conducting abatement must be trained and certified as abatement workers by a training provider accredited by the DNER.

Based on the lead-based paint inspection and the XRF field testing data generated components was identified with results above the allowable regulatory limits of 1.0 mg / cm² for lead-based paint.

2.11 REPORT CERTIFICATION

CMC Environmental Corp Certify that this report has been made according to the requirements regulation, and /or protocols of the Department of Natural and Environmental Resources of P.R. (DNER) and federal Agencies.

Carlos M. Carrión Montalvo
DNER # LBPRA-22923-283

APPENDIX A

Certification Licenses, Accreditations.

CERTIFICACIÓN PLOMO PUERTO RICO

Esta tarjeta autoriza a:

Carlos M. Carrión Montalvo

Para realizar actividades relacionadas a Mitigación de Pintura con Base de Plomo

Disciplina: **Evaluador de Riesgos**

Fecha de Expiración: Agosto 23, 2024

Certificación #:

LBPRA-22923-283

Firma Autorizada
Departamento de Recursos Naturales y Ambientales

GOBIERNO DE PUERTO RICO

Departamento de Recursos Naturales y Ambientales

Este certificado es otorgado a:

CMC Environmental Corp.

Por haber cumplido con los requisitos establecidos en el Capítulo VI, Regla 127 del Reglamento para el Manejo Adecuado de Actividades de Pintura con Base de Plomo. Se le otorga esta certificación como **Firma** para llevar a cabo actividades relacionadas a Mitigación de Pintura con base de plomo en la jurisdicción de Puerto Rico.

Número de Certificado

LBPF-17423-025

Fecha de emisión: Julio 14, 2023

Fecha de Expiración: Julio 13, 2024

DRNA

José Roque Juliá
Jefe
División Desperdicios Tóxicos

Certificate of Achievement

This is to certify that

Carlos M. Carrion

CMC Environmental Consultants

on the 8th day of July 2004 successfully completed the factory training for

RMD's LPA-1 Lead Paint Inspection System

including, but not limited to, the topics of Radiation Safety and the Proper Use of the Instrument.

Jacob Paster. Vice President. RMD
44 Hunt St.. Watertown. Massachusetts

APPENDIX # B

Lead Based Paint Testing Form.

CMC ENVIRONMENTAL CORP
P.O. Box 29702 San Juan, P.R. 00920-0702
email:cmcenvironmental@live.com

LEAD BASED PAINT TESTING FORM

Project: **Plaza de Arecibo**				Abatemen level 1.0 Mg/cm²			Client: **Iglesias & Vazquez & Assoc**		
Date: October 5, 2023			LBP Inspector/Risk Assesor: Carlos M. Carrión Certification # LBPRA-22923-283						
Sampling Area	**Functional Space**	**Side**	**Component**	**Location**	**Color**	**Substrate**	**XRF Reading**	**Positive Area**	**Comments**
Plaza Arecibo	Calibration						1.0		
Plaza Arecibo	Calibration						1.1		
Plaza Arecibo	Calibration						1.0		
Plaza Arecibo	Plaza	West	Guardrail	Exterior	Brown	Metal	0.1		
Plaza Arecibo	Sidewalk	West	Guardrail	Exterior	Brown	Metal	0.1		
Plaza Arecibo	Stair	West	Guardrail	Exterior	Brown	Metal	0.1		
Plaza Arecibo	Stair	West	Guardrail	Exterior	Brown	Metal	0.1		
Plaza Arecibo	Stair	West	Guardrail	Exterior	Brown	Metal	0.1		
Plaza Arecibo	Stair	West	Guardrail	Exterior	Brown	Metal	0.1		
Plaza Arecibo	Stair	West	Guardrail	Exterior	Brown	Metal	0.1		
Plaza Arecibo	Stair	West	Guardrail	Exterior	Brown	Metal	0.1		
Plaza Arecibo	Stair	West	Guardrail	Exterior	Brown	Metal	0.1		
Plaza Arecibo	Sidewalk	West	Light Pole	Exterior	Brown	Metal	0.2		
Plaza Arecibo	Sidewalk	West	Guardrail Top	Exterior	Brown	Wood	0.2		
Plaza Arecibo	Sidewalk		Handrail	Exterior	Brown	Metal	**1.3**	**X**	
Plaza Arecibo	Sidewalk	West	Handrail	Exterior	Brown	Wood	0.3		
Plaza Arecibo	Sidewalk	West	Handrail	Exterior	Brown	Metal	**1.8**	**X**	

CMC ENVIRONMENTAL CORP
P.O. Box 29702 San Juan, P.R. 00920-0702
email:cmcenvironmental@live.com

LEAD BASED PAINT TESTING FORM

Project: **Plaza de Arecibo**				Abatemen level 1.0 Mg/cm²			Client: **Iglesias & Vazquez & Assoc**		
Date: October 5, 2023			LBP Inspector/Risk Assesor: Carlos M. Carrión Certification # LBPRA-22923-283						
Sampling Area	**Functional Space**	**Side**	**Component**	**Location**	**Color**	**Substrate**	**XRF Reading**	**Positive Area**	**Comments**
Plaza Arecibo	Sidewalk	West	Handrail	Exterior	Brown	Wood	0.3		
Plaza Arecibo	Sidewalk	West	Handrail	Exterior	Brown	Metal	0.3		
Plaza Arecibo	Sidewalk	West	Handrail	Exterior	Brown	Wood	0.2		
Plaza Arecibo	Sidewalk	West	Light Pole	Exterior	Brown	Metal	0.1		
Plaza Arecibo	Sidewalk		Floor	Exterior	Brown	Ceramic	0.3		
Plaza Arecibo	Sidewalk	North-West	Bench	Exterior	Brown	Wood	0.2		
Plaza Arecibo	Sidewalk	North-West	Bench	Exterior	Brown	Wood	0.2		
Plaza Arecibo	Sidewalk	North-West	Bench	Exterior	Brown	Wood	0.2		
Plaza Arecibo	Sidewalk	North-West	Bench	Exterior	Brown	Wood	0.2		
Plaza Arecibo	Sidewalk	North-West	Bench	Exterior	Brown	Wood	0.2		
Plaza Arecibo	Sidewalk	North-West	Light Pole	Exterior	Brown	Metal	0.1		
Plaza Arecibo	Sidewalk		Light Pole	Exterior	Brown	Metal	0.1		
Plaza Arecibo	Sidewalk		Light Pole	Exterior	Brown	metal	0.1		
Plaza Arecibo	Sidewalk		Light Pole	Exterior	Brown	metal	0.1		
Plaza Arecibo	Sidewalk		Light Pole	Exterior	Brown	metal	0.1		
Plaza Arecibo	Sidewalk		Light Pole	Exterior	Brown	metal	0.1		
Plaza Arecibo	Sidewalk		Light Pole	Exterior	Brown	metal	0.1		

CMC ENVIRONMENTAL CORP
P.O. Box 29702 San Juan, P.R. 00920-0702
email:cmcenvironmental@live.com

LEAD BASED PAINT TESTING FORM

Project: **Plaza de Arecibo**				Abatemen level 1.0 Mg/cm²			Client: **Iglesias & Vazquez & Assoc**		
Date: October 5, 2023			LBP Inspector/Risk Assesor: Carlos M. Carrión Certification # LBPRA-22923-283						
Sampling Area	**Functional Space**	**Side**	**Component**	**Location**	**Color**	**Substrate**	**XRF Reading**	**Positive Area**	**Comments**
Plaza Arecibo	Sidewalk	North	Guardrail	Exterior	Brown	metal	0.2		
Plaza Arecibo	Sidewalk	North	Guardrail	Exterior	Brown	metal	0.2		
Plaza Arecibo	Sidewalk	North	Guardrail	Exterior	Brown	metal	0.2		
Plaza Arecibo	Sidewalk	North	Guardrail	Exterior	Brown	metal	0.2		
Plaza Arecibo	Sidewalk	North	Guardrail	Exterior	Brown	metal	0.2		
Plaza Arecibo	Sidewalk	North	Guardrail	Exterior	Brown	metal	0.2		
Plaza Arecibo	Sidewalk	North	Guardrail	Exterior	Brown	metal	0.2		
Plaza Arecibo	Sidewalk	North	Guardrail	Exterior	Brown	metal	0.2		
Plaza Arecibo	Sidewalk	North	Guardrail	Exterior	Brown	metal	0.2		
Plaza Arecibo	Sidewalk	North	Guardrail	Exterior	Brown	metal	0.2		
Plaza Arecibo	Sidewalk	North	Guardrail	Exterior	Brown	metal	0.2		
Plaza Arecibo	Sidewalk	North	Guardrail	Exterior	Brown	metal	0.2		
Plaza Arecibo	Sidewalk	North	Guardrail	Exterior	Brown	metal	0.2		
Plaza Arecibo	Sidewalk	North	Guardrail	Exterior	Brown	metal	0.2		
Plaza Arecibo	Sidewalk	North	Guardrail	Exterior	Brown	metal	0.2		
Plaza Arecibo	Sidewalk	North	Guardrail	Exterior	Brown	metal	0.2		
Plaza Arecibo	Sidewalk	North	Guardrail	Exterior	Brown	metal	0.2		

CMC ENVIRONMENTAL CORP
P.O. Box 29702 San Juan, P.R. 00920-0702
email:cmcenvironmental@live.com

LEAD BASED PAINT TESTING FORM

Project: **Plaza de Arecibo**				Abatemen level 1.0 Mg/cm²			Client: **Iglesias & Vazquez & Assoc**		
Date: October 5, 2023			LBP Inspector/Risk Assesor: Carlos M. Carrión Certification # LBPRA-22923-283						
Sampling Area	**Functional Space**	**Side**	**Component**	**Location**	**Color**	**Substrate**	**XRF Reading**	**Positive Area**	**Comments**
Plaza Arecibo	Sidewalk	North	Guardrail	Exterior	Brown	metal	0.2		
Plaza Arecibo	Sidewalk	North	Guardrail	Exterior	Brown	metal	0.2		
Plaza Arecibo	Sidewalk	East	Light Pole	Exterior	Brown	Metal	0.1		
Plaza Arecibo	Sidewalk		Guardrail	Exterior	Brown	Metal	0.1		
Plaza Arecibo	Sidewalk		Guardrail	Exterior	Brown	Metal	0.2		
Plaza Arecibo	Sidewalk		Guardrail	Exterior	Brown	Metal	0.1		
Plaza Arecibo	Sidewalk		Guardrail	Exterior	Brown	Metal	0.2		
Plaza Arecibo	Sidewalk		Guardrail	Exterior	Brown	Metal	0.2		
Plaza Arecibo	Stair		Handrail	Exterior	Brown	Tubing	2.2	X	
Plaza Arecibo	Stair		Handrail	Exterior	Brown	Tubing	1.2	X	
Plaza Arecibo	Stair		Handrail	Exterior	Brown	Tubing	1.3	X	
Plaza Arecibo	Stair		Handrail Top	Exterior	Brown	Wood	0.2		
Plaza Arecibo	Sidewalk	South	Light Pole	Exterior	Brown	Metal	0.1		
Plaza Arecibo	Sidewalk	South	Light Pole	Exterior	Brown	Metal	0.1		
Plaza Arecibo	Sidewalk	South	Light Pole	Exterior	Brown	Metal	0.2		
Plaza Arecibo	Sidewalk	South	Light Pole	Exterior	Brown	Metal	0.1		
Plaza Arecibo	Sidewalk	South	Light Pole	Exterior	Brown	Metal	0.1		

CMC ENVIRONMENTAL CORP
P.O. Box 29702 San Juan, P.R. 00920-0702
email:cmcenvironmental@live.com

LEAD BASED PAINT TESTING FORM

Project: **Plaza de Arecibo**				Abatemen level 1.0 Mg/cm²			Client: **Iglesias & Vazquez & Assoc**		
Date: October 5, 2023			LBP Inspector/Risk Assesor: Carlos M. Carrión Certification # LBPRA-22923-283						
Sampling Area	**Functional Space**	**Side**	**Component**	**Location**	**Color**	**Substrate**	**XRF Reading**	**Positive Area**	**Comments**
Plaza Arecibo	Sidewalk	South	Light Pole	Exterior	Brown	Metal	0.2		
Plaza Arecibo	Stair 1	South	Handrail	Exterior	Brown	Metal	1.7	x	
Plaza Arecibo	Stair 2	South	Handrail	Exterior	Brown	Metal	1.3	x	
Plaza Arecibo	Stair 2	South	Floor	Exterior	Cream	Ceramic	0.3		
Plaza Arecibo	Stair 2	South	Guardrail	Exterior	Brown	Metal	0.2		
Plaza Arecibo	Stair 2	South	Guardrail	Exterior	Brown	Metal	0.1		
Plaza Arecibo	Stair 2	South	Guardrail	Exterior	Brown	Metal	0.1		
Plaza Arecibo	Stair 2	South	Guardrail	Exterior	Brown	Metal	0.2		
Plaza Arecibo	Stair 2	South	Guardrail	Exterior	Brown	Metal	0.1		
Plaza Arecibo	Stair 2	South	Guardrail	Exterior	Brown	Metal	0.2		
Plaza Arecibo	Stair 2	South	Guardrail	Exterior	Brown	Metal	0.1		
Plaza Arecibo	Stair 2	South	Guardrail	Exterior	Brown	Metal	0.1		
Plaza Arecibo	Stair 2	South	Guardrail	Exterior	Brown	Metal	0.2		
Plaza Arecibo	Stair 2	South	Guardrail	Exterior	Brown	Metal	0.2		
Plaza Arecibo	Stair 2	South	Guardrail	Exterior	Brown	Metal	0.2		
Plaza Arecibo	Stair 2	South	Guardrail	Exterior	Brown	Metal	0.1		
Plaza Arecibo	Stair 2	South	Guardrail	Exterior	Brown	Metal	0.1		

CMC ENVIRONMENTAL CORP
P.O. Box 29702 San Juan, P.R. 00920-0702
email:cmcenvironmental@live.com

LEAD BASED PAINT TESTING FORM

Project: **Plaza de Arecibo**				Abatemen level 1.0 Mg/cm²			Client: **Iglesias & Vazquez & Assoc**		
Date: October 5, 2023			LBP Inspector/Risk Assesor: Carlos M. Carrión Certification # LBPRA-22923-283						
Sampling Area	**Functional Space**	**Side**	**Component**	**Location**	**Color**	**Substrate**	**XRF Reading**	**Positive Area**	**Comments**
Plaza Arecibo	Stair 2	South	Guardrail	Exterior	Brown	Metal	0.1		
Plaza Arecibo	Stair 2	South	Guardrail	Exterior	Brown	Metal	0.2		
Plaza Arecibo	Stair 2	South	Guardrail	Exterior	Brown	Metal	0.1		
Plaza Arecibo	Stair 2	South	Guardrail	Exterior	Brown	Metal	0.1		
Plaza Arecibo	Stair 2	South	Guardrail	Exterior	Brown	Metal	0.1		
Plaza Arecibo	Stair 2	South	Guardrail	Exterior	Brown	Metal	0.1		
Plaza Arecibo	Stair 2	South	Guardrail	Exterior	Brown	Metal	0.2		
Plaza Arecibo	Stair 2	South	Guardrail	Exterior	Brown	Metal	0.1		
Plaza Arecibo	Stair 2	South	Guardrail	Exterior	Brown	Metal	0.2		
Plaza Arecibo	Stair 3	South	Handrail	Exterior	Brown	Metal	1.8	X	
Plaza Arecibo	Stair 3		Handrail	Exterior	Gray	Metal	1.6	X	
Plaza Arecibo	Plaza	North	Floor	Exterior	Cream	Ceramic	0.2		
Plaza Arecibo	Plaza	North	Floor	Exterior	Brown	Ceramic	0.1		
Plaza Arecibo	Plaza		Lower Light Pole	Exterior	Brown	Metal	0.2		
Plaza Arecibo	Plaza		Lower Light Pole	Exterior	Brown	Metal	0.2		
Plaza Arecibo	Plaza		Water Fountain	Exterior	Brown	Metal	0.1		
Plaza Arecibo	Plaza		Bench	Exterior	Brown	Metal	0.2		

CMC ENVIRONMENTAL CORP
P.O. Box 29702 San Juan, P.R. 00920-0702
email:cmcenvironmental@live.com

LEAD BASED PAINT TESTING FORM

Project: **Plaza de Arecibo**				Abatemen level 1.0 Mg/cm²			Client: **Iglesias & Vazquez & Assoc**		
Date: October 5, 2023			LBP Inspector/Risk Assesor: Carlos M. Carrión Certification # LBPRA-22923-283						
Sampling Area	**Functional Space**	**Side**	**Component**	**Location**	**Color**	**Substrate**	**XRF Reading**	**Positive Area**	**Comments**
Plaza Arecibo	Plaza		Bench	Exterior	Brown	Metal	0.2		
Plaza Arecibo	Plaza		Bench	Exterior	Brown	Metal	0.2		
Plaza Arecibo	Plaza		Light Pole	Exterior	Brown	Metal	0.2		
Plaza Arecibo	Plaza		Lower Light Pole	Exterior	Brown	Metal	0.2		
Plaza Arecibo	Kiosko	West	Wall	Exterior	Black	metal	0.1		
Plaza Arecibo	Kiosko		Concrete Base	Exterior	Brown	Concrete	0.1		
Plaza Arecibo	Kiosko	North	Wall	Exterior	Black	metal	0.2		
Plaza Arecibo	Kiosko	East	Wall	Exterior	Black	metal	0.1		
Plaza Arecibo	Kiosko	South	Wall	Exterior	Black	metal	0.1		
Plaza Arecibo	Kiosko	East	Door	Exterior	Brown	metal	0.1		
Plaza Arecibo	Kiosko	North-East	Light Pole	Exterior	Brown	metal	0.3		
Plaza Arecibo	Kiosko	North-East	Light Pole	Exterior	Brown	metal	0.2		
Plaza Arecibo	Kiosko	North-East	Bench	Exterior	Brown	metal	0.2		
Plaza Arecibo	Kiosko	North-East	Bench	Exterior	Brown	metal	0.2		
Plaza Arecibo	Kiosko	North-East	Bench	Exterior	Brown	metal	0.2		
Plaza Arecibo	Kiosko	North-East	Bench	Exterior	Brown	metal	0.2		
Plaza Arecibo	Kiosko	North-East	Bench	Exterior	Brown	metal	0.2		

CMC ENVIRONMENTAL CORP
P.O. Box 29702 San Juan, P.R. 00920-0702
email:cmcenvironmental@live.com

LEAD BASED PAINT TESTING FORM

Project: **Plaza de Arecibo**				Abatemen level 1.0 Mg/cm²			Client: **Iglesias & Vazquez & Assoc**		
Date: October 5, 2023			LBP Inspector/Risk Assesor: Carlos M. Carrión Certification # LBPRA-22923-283						
Sampling Area	**Functional Space**	**Side**	**Component**	**Location**	**Color**	**Substrate**	**XRF Reading**	**Positive Area**	**Comments**
Plaza Arecibo	Kiosko	North-East	Bench	Exterior	Brown	metal	0.2		
Plaza Arecibo	Kiosko	North-East	Bench	Exterior	Brown	metal	0.2		
Plaza Arecibo	Kiosko	North-East	Bench	Exterior	Brown	metal	0.2		
Plaza Arecibo	Kiosko	North-East	Bench	Exterior	Brown	metal	0.2		
Plaza Arecibo	Kiosko	North-East	Bench	Exterior	Brown	metal	0.2		
Plaza Arecibo	Kiosko	North-East	Bench	Exterior	Brown	metal	0.2		
Plaza Arecibo	Kiosko	North-East	Bench	Exterior	Brown	metal	0.2		
Plaza Arecibo	Kiosko	North-East	Bench	Exterior	Brown	metal	0.2		
Plaza Arecibo	Kiosko	North-East	Bench	Exterior	Brown	metal	0.2		
Plaza Arecibo	Kiosko	North-East	Bench	Exterior	Brown	metal	0.2		
Plaza Arecibo	Kiosko	North-East	Bench	Exterior	Brown	metal	0.2		
Plaza Arecibo	Kiosko		Lower Light Pole	Exterior	Brown	metal	0.2		
Plaza Arecibo	Plaza	East	Lower Light Pole	Exterior	Brown	metal	0.2		
Plaza Arecibo	Plaza	East	Lower Light Pole	Exterior	Brown	metal	0.2		
Plaza Arecibo	Fountain	East	Light Pole	Exterior	Brown	metal	0.2		
Plaza Arecibo	Fountain	East	Light Pole	Exterior	Brown	metal	0.2		
Plaza Arecibo	Fountain	East	Light Pole	Exterior	Brown	metal	0.1		

CMC ENVIRONMENTAL CORP
P.O. Box 29702 San Juan, P.R. 00920-0702
email:cmcenvironmental@live.com

LEAD BASED PAINT TESTING FORM

Project: **Plaza de Arecibo**				Abatemen level 1.0 Mg/cm²			Client: **Iglesias & Vazquez & Assoc**		
Date: October 5, 2023			LBP Inspector/Risk Assesor: Carlos M. Carrión Certification # LBPRA-22923-283						
Sampling Area	**Functional Space**	**Side**	**Component**	**Location**	**Color**	**Substrate**	**XRF Reading**	**Positive Area**	**Comments**
Plaza Arecibo	Fountain	East	Light Pole	Exterior	Brown	metal	0.2		
Plaza Arecibo	Fountain	East	Light Pole	Exterior	Brown	metal	0.1		
Plaza Arecibo	Fountain	East	Light Pole	Exterior	Brown	metal	0.1		
Plaza Arecibo	Fountain	East	Light Pole	Exterior	Brown	metal	0.1		
Plaza Arecibo	Fountain	East	Light Pole	Exterior	Brown	metal	0.1		
Plaza Arecibo	Fountain	East	Light Pole	Exterior	Brown	metal	0.1		
Plaza Arecibo	Fountain	East	Light Pole	Exterior	Brown	metal	0.1		
Plaza Arecibo	Fountain	East	Light Pole	Exterior	Brown	metal	0.1		
Plaza Arecibo	Fountain	East	Light Pole	Exterior	Brown	metal	0.1		
Plaza Arecibo	Fountain	East	Light Pole	Exterior	Brown	metal	0.1		
Plaza Arecibo	Fountain	East	Light Pole	Exterior	Brown	metal	0.1		
Plaza Arecibo	Fountain	East	Light Pole	Exterior	Brown	metal	0.1		
Plaza Arecibo	Fountain	East	Light Pole	Exterior	Brown	metal	0.1		
Plaza Arecibo	Fountain	East	Interior Wall	Interior	Blue	Concrete	0.2		
Plaza Arecibo	Fountain	East	Wall	Interior	Blue	Ceramic	0.2		
Plaza Arecibo	Plaza	South	Lower Light Pole	Exterior	Brown	metal	0.2		
Plaza Arecibo	Plaza	South	Lower Light Pole	Exterior	Brown	metal	0.2		

CMC ENVIRONMENTAL CORP
P.O. Box 29702 San Juan, P.R. 00920-0702
email:cmcenvironmental@live.com

LEAD BASED PAINT TESTING FORM

Project: **Plaza de Arecibo**				Abatemen level 1.0 Mg/cm²			Client: **Iglesias & Vazquez & Assoc**		
Date: October 5, 2023			LBP Inspector/Risk Assesor: Carlos M. Carrión Certification # LBPRA-22923-283						
Sampling Area	**Functional Space**	**Side**	**Component**	**Location**	**Color**	**Substrate**	**XRF Reading**	**Positive Area**	**Comments**
Plaza Arecibo	Plaza	South	Lower Light Pole	Exterior	Brown	metal	0.2		
Plaza Arecibo	Plaza	South	Lower Light Pole	Exterior	Brown	metal	0.2		
Plaza Arecibo	Plaza	South	Lower Light Pole	Exterior	Brown	metal	0.2		
Plaza Arecibo	Plaza	South	Lower Light Pole	Exterior	Brown	metal	0.2		
Plaza Arecibo	Plaza	South	Lower Light Pole	Exterior	Brown	metal	0.2		
Plaza Arecibo	Plaza	South	Lower Light Pole	Exterior	Brown	metal	0.2		
Plaza Arecibo	Plaza	South	Lower Light Pole	Exterior	Brown	metal	0.2		
Plaza Arecibo	Plaza	South	Lower Light Pole	Exterior	Brown	metal	0.2		
Plaza Arecibo	Plaza	South	Lower Light Pole	Exterior	Brown	metal	0.2		
Plaza Arecibo	Plaza	South	Lower Light Pole	Exterior	Brown	metal	0.2		
Plaza Arecibo	Plaza		Lower Light Pole	Exterior	Brown	metal	0.2		
Plaza Arecibo	Plaza		Light Pole	Exterior	Brown	metal	0.1		
Plaza Arecibo	Plaza		Bench	Exterior	Brown	metal	0.2		
Plaza Arecibo	Plaza		Bench	Exterior	Brown	metal	0.2		
Plaza Arecibo	Plaza		Bench	Exterior	Brown	metal	0.2		
Plaza Arecibo	Plaza		Bench	Exterior	Brown	metal	0.2		
Plaza Arecibo	Plaza		Bench	Exterior	Brown	metal	0.2		

CMC ENVIRONMENTAL CORP
P.O. Box 29702 San Juan, P.R. 00920-0702
email:cmcenvironmental@live.com

LEAD BASED PAINT TESTING FORM

Project: **Plaza de Arecibo**				Abatemen level 1.0 Mg/cm²			Client: **Iglesias & Vazquez & Assoc**		
Date: October 5, 2023			LBP Inspector/Risk Assesor: Carlos M. Carrión Certification # LBPRA-22923-283						
Sampling Area	**Functional Space**	**Side**	**Component**	**Location**	**Color**	**Substrate**	**XRF Reading**	**Positive Area**	**Comments**
Plaza Arecibo	Plaza		Bench	Exterior	Brown	metal	0.2		
Plaza Arecibo	Plaza		Bench	Exterior	Brown	metal	0.2		
Plaza Arecibo	Plaza		Bench	Exterior	Brown	metal	0.2		
Plaza Arecibo	Plaza		Bench	Exterior	Brown	metal	0.2		
Plaza Arecibo	Plaza		Bench	Exterior	Brown	metal	0.2		
Plaza Arecibo	Plaza		Bench	Exterior	Brown	metal	0.2		
Plaza Arecibo	Plaza		Bench	Exterior	Brown	metal	0.2		
Plaza Arecibo	Plaza		Bench	Exterior	Brown	metal	0.2		
Plaza Arecibo	Plaza		Bench	Exterior	Brown	metal	0.2		
Plaza Arecibo	Plaza		Bench	Exterior	Brown	metal	0.2		
Plaza Arecibo	Plaza		Bench	Exterior	Brown	metal	0.2		
Plaza Arecibo	Plaza		Bench	Exterior	Brown	Wood	0.2		
Plaza Arecibo	Plaza		Bench	Exterior	Brown	Wood	0.2		
Plaza Arecibo	Plaza		Bench	Exterior	Brown	Wood	0.2		
Plaza Arecibo	Plaza		Bench	Exterior	Brown	Wood	0.2		
Plaza Arecibo	Plaza		Bench	Exterior	Brown	Wood	0.2		
Plaza Arecibo	Plaza		Bench	Exterior	Brown	Wood	0.2		

CMC ENVIRONMENTAL CORP
P.O. Box 29702 San Juan, P.R. 00920-0702
email:cmcenvironmental@live.com

LEAD BASED PAINT TESTING FORM

Project: **Plaza de Arecibo**				Abatemen level 1.0 Mg/cm²			Client: **Iglesias & Vazquez & Assoc**		
Date: October 5, 2023			LBP Inspector/Risk Assesor: Carlos M. Carrión Certification # LBPRA-22923-283						
Sampling Area	**Functional Space**	**Side**	**Component**	**Location**	**Color**	**Substrate**	**XRF Reading**	**Positive Area**	**Comments**
Plaza Arecibo	Plaza		Bench	Exterior	Brown	Wood	0.2		
Plaza Arecibo	Plaza		Bench	Exterior	Brown	Wood	0.2		
Plaza Arecibo	Plaza		Bench	Exterior	Brown	Wood	0.2		
Plaza Arecibo	Plaza		Bench	Exterior	Brown	Wood	0.2		
Plaza Arecibo	Plaza		Bench	Exterior	Brown	Wood	0.2		
Plaza Arecibo	Plaza		Bench	Exterior	Brown	Wood	0.2		
Plaza Arecibo	Plaza		Bench	Exterior	Brown	Wood	0.2		
Plaza Arecibo	Plaza		Bench	Exterior	Brown	Wood	0.2		
Plaza Arecibo	Plaza		Bench	Exterior	Brown	Wood	0.2		
Plaza Arecibo	Obelizco	North	Wall	Exterior	White	Concrete	0.1		
Plaza Arecibo	Obelizco	East	Wall	Exterior	White	Concrete	0.2		
Plaza Arecibo	Obelizco	South	Wall	Exterior	White	Concrete	0.2		
Plaza Arecibo	Obelizco	West	Wall	Exterior	White	Concrete	0.2		
Plaza Arecibo	Plaza	Center	Light Pole	Exterior	Brown	Metal	0.2		
Plaza Arecibo	Plaza	Center	Light Pole	Exterior	Brown	Metal	0.2		
Plaza Arecibo	Plaza	Center	Light Pole	Exterior	Brown	Metal	0.1		

CMC ENVIRONMENTAL CORP
P.O. Box 29702 San Juan, P.R. 00920-0702
email:cmcenvironmental@live.com

LEAD BASED PAINT TESTING FORM

Project: **Plaza de Arecibo**				Abatemen level 1.0 Mg/cm²			Client: **Iglesias & Vazquez & Assoc**		
Date: October 5, 2023			LBP Inspector/Risk Assesor: Carlos M. Carrión Certification # LBPRA-22923-283						
Sampling Area	**Functional Space**	**Side**	**Component**	**Location**	**Color**	**Substrate**	**XRF Reading**	**Positive Area**	**Comments**
Plaza Arecibo	Plaza	Center	Light Pole	Exterior	Brown	Metal	0.2		
Plaza Arecibo	Plaza	Center	Light Pole Base	Exterior	Brown	Metal	0.2		
Plaza Arecibo	Plaza	Center	Light Pole Base	Exterior	Brown	Metal	0.2		
Plaza Arecibo	Plaza	Center	Light Pole Base	Exterior	Brown	Metal	0.1		
Plaza Arecibo	Glorieta		Column	Exterior	Brown	Concrete	0.2		
Plaza Arecibo	Glorieta		Column	Exterior	Brown	Concrete	0.2		
Plaza Arecibo	Glorieta		Column	Exterior	Brown	Concrete	0.1		
Plaza Arecibo	Glorieta		Column	Exterior	Brown	Concrete	0.2		
Plaza Arecibo	Glorieta		Column	Exterior	Brown	Concrete	0.1		
Plaza Arecibo	Glorieta		Column	Exterior	Brown	Concrete	0.2		
Plaza Arecibo	Glorieta		Column	Exterior	Brown	Concrete	0.2		
Plaza Arecibo	Glorieta		Column	Exterior	Brown	Concrete	0.1		
Plaza Arecibo	Plaza	South West	Light Pole	Exterior	Brown	Metal	0.2		
Plaza Arecibo	Plaza		Light Pole Base	Exterior	Brown	Metal	0.1		
Plaza Arecibo	Kiosko Vegan		Gage	Exterior	Brown	metal	0.1		
Plaza Arecibo	Kitchen		Floor	Exterior	White	Ceramic	0.2		
Plaza Arecibo	Kitchen		Wall A	Exterior	White	Concrete	0.2		

CMC ENVIRONMENTAL CORP
P.O. Box 29702 San Juan, P.R. 00920-0702
email:cmcenvironmental@live.com

LEAD BASED PAINT TESTING FORM

Project: **Plaza de Arecibo**				Abatemen level 1.0 Mg/cm²			Client: **Iglesias & Vazquez & Assoc**		
Date: October 5, 2023			LBP Inspector/Risk Assesor: Carlos M. Carrión Certification # LBPRA-22923-283						
Sampling Area	**Functional Space**	**Side**	**Component**	**Location**	**Color**	**Substrate**	**XRF Reading**	**Positive Area**	**Comments**
Plaza Arecibo	Kitchen		Wall B	Exterior	White	Concrete	0.1		
Plaza Arecibo	Kitchen		Wall C	Exterior	White	Concrete	0.2		
Plaza Arecibo	Kitchen		Wall D	Exterior	White	Concrete	0.1		
Plaza Arecibo	Bathroom		Door	Interior	Black	Wood	0.2		
Plaza Arecibo	Bathroom		Door Frame	Interior	Black	Wood	0.1		
Plaza Arecibo	Bathroom		Wall A	Interior	White	Concrete	0.2		
Plaza Arecibo	Bathroom		Wall B	Interior	White	Concrete	0.1		
Plaza Arecibo	Bathroom		Wall C	Interior	White	Concrete	0.2		
Plaza Arecibo	Bathroom		Wall D	Interior	White	Concrete	0.1		
Plaza Arecibo	Bathroom		Toilet	Interior	White	Ceramic	0.2		
Plaza Arecibo	Bathroom		Lavatory	Interior	White	Ceramic	0.1		
Plaza Arecibo	Bathroom		Floor	Interior	White	Ceramic	0.2		
Plaza Arecibo	Kiosko Storage		Wall A	Interior	Green	Concrete	0.2		
Plaza Arecibo	Kiosko Storage		Wall B	Interior	Green	Concrete	0.1		
Plaza Arecibo	Kiosko Storage		Wall C	Interior	Green	Concrete	0.2		
Plaza Arecibo	Kiosko Storage		Wall C	Interior	Green	Concrete	0.1		
Plaza Arecibo	Kiosko Storage		Wall D	Interior	Green	Concrete	0.2		

CMC ENVIRONMENTAL CORP
P.O. Box 29702 San Juan, P.R. 00920-0702
email:cmcenvironmental@live.com

LEAD BASED PAINT TESTING FORM

Project: **Plaza de Arecibo**				Abatemen level 1.0 Mg/cm²			Client: **Iglesias & Vazquez & Assoc**		
Date: October 5, 2023			LBP Inspector/Risk Assesor: Carlos M. Carrión Certification # LBPRA-22923-283						
Sampling Area	**Functional Space**	**Side**	**Component**	**Location**	**Color**	**Substrate**	**XRF Reading**	**Positive Area**	**Comments**
Plaza Arecibo	Electrical Room		Wall A	Interior	Cream	Concrete	0.2		
Plaza Arecibo	Electrical Room		Wall B	Interior	Cream	Concrete	0.1		
Plaza Arecibo	Electrical Room		Wall C	Interior	Cream	Concrete	0.2		
Plaza Arecibo	Electrical Room		Wall D	Interior	Cream	Concrete	0.1		
	Calibartion						1.1		
	Calibartion						1.0		
	Calibartion						1.1		

APPENDIX # C

Calibration Form

CMC ENVIRONMENTAL CORP.

XRF CALIBRATION FORM

INSPECTOR/RISK ASSESSOR: Carlos M Carrion Montalvo
XRF INFORMATION RMD LPA-1 Lead Analyzer
SERIAL: 2526
PROJECT: **REVITALIZATION OF LUIS MUÑOZ RIVERA PLAZA IN THE MUNICIPALITY OF ARECIBO, P.R**

DATE: 10/5/2023 **TIME**: 10:50

1st Calibration	2nd Calibration	3rd Calibration	Average
1.1	1.1	1.0	1.0

DATE: 10/5/2023 **TIME**: 11:40

1st Calibration	2nd Calibration	3rd Calibration	Average
1.0	1.0	1.1	1.0-

Comments:

_____

_____

_____

_____

APPENDIX D

XRF Performance Characteristics Sheet (PCS)

Performance Characteristic Sheet

EFFECTIVE DATE: **October 24, 2000** **EDITION NO.: 4**

MANUFACTURER AND MODEL:

Make: *Radiation Monitoring Devices*
Model: *LPA-1*
Source: ^{57}Co
Note: This sheet supersedes all previous sheets for the XRF instrument of the make, model, and source shown above ***for instruments sold or serviced after June 26, 1995. For other instruments, see prior editions.***

FIELD OPERATION GUIDANCE

OPERATING PARAMETERS

Quick mode or nominal 30-second standard mode readings.

XRF CALIBRATION CHECK LIMITS

0.7 to 1.3 mg/cm^2 (inclusive)

SUBSTRATE CORRECTION:

For XRF results below 4.0 mg/cm^2, substrate correction is recommended for:

Metal using 30-second standard mode readings.

None using quick mode readings.

Substrate correction is not needed for:

Brick, Concrete, Drywall, Plaster, and Wood using 30-second standard mode readings

Brick, Concrete, Drywall, Metal, Plaster, and Wood using quick mode readings

THRESHOLDS:

30-SECOND STANDARD MODE READING DESCRIPTION	SUBSTRATE	THRESHOLD (mg/cm^2)
Results corrected for substrate bias on metal substrate only	Brick	1.0
	Concrete	1.0
	Drywall	1.0
	Metal	0.9
	Plaster	1.0
	Wood	1.0

QUICK MODE READING DESCRIPTION	SUBSTRATE	THRESHOLD (mg/cm^2)
Readings not corrected for substrate bias on any substrate	Brick	1.0
	Concrete	1.0
	Drywall	1.0
	Metal	1.0
	Plaster	1.0
	Wood	1.0

BACKGROUND INFORMATION

EVALUATION DATA SOURCE AND DATE:

This sheet is supplemental information to be used in conjunction with Chapter 7 of the HUD *Guidelines for the Evaluation and Control of Lead-Based Paint Hazards in Housing* ("HUD Guidelines"). Performance parameters shown on this sheet are calculated from the EPA/HUD evaluation using archived building components. Testing was conducted on approximately 150 test locations in July 1995. The instrument that performed testing in September had a new source installed in June 1995 with 12 mCi initial strength.

OPERATING PARAMETERS:

Performance parameters shown in this sheet are applicable only when properly operating the instrument using the manufacturer's instructions and procedures described in Chapter 7 of the HUD Guidelines.

XRF CALIBRATION CHECK:

The calibration of the XRF instrument should be checked using the paint film nearest 1.0 mg/cm ^{2} in the NIST Standard Reference Material (SRM) used (e.g., for NIST SRM 2579, use the 1.02 mg/cm ^{2} film).

If readings are outside the acceptable calibration check range, follow the manufacturer's instructions to bring the instruments into control before XRF testing proceeds

SUBSTRATE CORRECTION VALUE COMPUTATION

Chapter 7 of the HUD Guidelines provides guidance on correcting XRF results for substrate bias. Supplemental guidance for using the paint film nearest 1.0 mg/cm ^{2} for substrate correction is provided:

XRF results are corrected for substrate bias by subtracting from each XRF result a correction value determined separately in each house for single-family housing or in each development for multifamily housing, for each substrate. The correction value is an average of XRF readings taken over the NIST SRM paint film nearest to 1.0 mg/cm ^{2} at test locations that have been scraped bare of their paint covering. Compute the correction values as follows:

> Using the same XRF instrument, take three readings on a bare substrate area covered with the NIST SRM paint film nearest 1 mg/cm ^{2}. Repeat this procedure by taking three more readings on a second bare substrate area of the same substrate covered with the NIST SRM.
>
> Compute the correction value for each substrate type where XRF readings indicate substrate correction is needed by computing the average of all six readings as shown below.
>
> For each substrate type (the 1.02 mg/cm^2 NIST SRM is shown in this example; use the actual lead loading of the NIST SRM used for substrate correction):
>
> Correction value = (1st + 2nd + 3rd + 4th + 5th + 6th *Reading*) / 6 - 1.02 mg/cm²
>
> Repeat this procedure for each substrate requiring substrate correction in the house or housing development.

EVALUATING THE QUALITY OF XRF TESTING:

Randomly select ten testing combinations for retesting from each house or from two randomly selected units in multifamily housing. Use either 15-second readings or 60-second readings.

Conduct XRF re-testing at the ten testing combinations selected for retesting.

Determine if the XRF testing in the units or house passed or failed the test by applying the steps below.

Compute the Retest Tolerance Limit by the following steps:

Determine XRF results for the original and retest XRF readings. Do not correct the original or retest results for substrate bias. In single-family housing a result is defined as the average of three readings. In multifamily housing, a result is a single reading. Therefore, there will be ten original and ten retest XRF results for each house or for the two selected units.

Calculate the average of the original XRF result and retest XRF result for each testing combination.

Square the average for each testing combination.

Add the ten squared averages together. Call this quantity C.

Multiply the number C by 0.0072. Call this quantity D.

Add the number 0.032 to D. Call this quantity E.

Take the square root of E. Call this quantity F.

Multiply F by 1.645. The result is the Retest Tolerance Limit.

Compute the average of all ten original XRF results.

Compute the average of all ten re-test XRF results.

Find the absolute difference of the two averages.

If the difference is less than the Retest Tolerance Limit, the inspection has passed the retest. If the difference of the overall averages equals or exceeds the Retest Tolerance Limit, this procedure should be repeated with ten new testing combinations. If the difference of the overall averages is equal to or greater than the Retest Tolerance Limit a second time, then the inspection should be considered deficient.

Use of this procedure is estimated to produce a spurious result approximately 1% of the time. That is, results of this procedure will call for further examination when no examination is warranted in approximately 1 out of 100 dwelling units tested.

BIAS AND PRECISION:

Do not use these bias and precision data to correct for substrate bias. These bias and precision data were computed without substrate correction from samples with reported laboratory results less than 4.0 mg/cm^2 lead. The data which were used to determine the bias and precision estimates given in the table below have the following properties. During the July 1995 testing, there were 15 test locations with a laboratory-reported result equal to or greater than 4.0 mg/cm^2 lead. Of these, one 30-second standard mode reading was less than 1.0 mg/cm^2 and none of the quick mode readings were less than 1.0 mg/cm^2. The instrument that tested in July is representative of instruments sold or serviced after June 26, 1995. These data are for illustrative purposes only. Actual bias must be determined on the site. Results provided above already account for bias and precision. Bias and precision ranges are provided to show the variability found between machines of the same model.

30-SECOND STANDARD MODE READING MEASURED AT	SUBSTRATE	BIAS (mg/cm^2)	PRECISION* (mg/cm^2)
0.0 mg/cm^2	Brick	0.0	0.1
	Concrete	0.0	0.1
	Drywall	0.1	0.1
	Metal	0.3	0.1
	Plaster	0.1	0.1
	Wood	0.0	0.1
0.5 mg/cm^2	Brick	0.0	0.2
	Concrete	0.0	0.2
	Drywall	0.0	0.2
	Metal	0.2	0.2
	Plaster	0.0	0.2
	Wood	0.0	0.2
1.0 mg/cm^2	Brick	0.0	0.3
	Concrete	0.0	0.3
	Drywall	0.0	0.3
	Metal	0.2	0.3
	Plaster	0.0	0.3
	Wood	0.0	0.3
2.0 mg/cm^2	Brick	-0.1	0.4
	Concrete	-0.1	0.4
	Drywall	-0.1	0.4
	Metal	0.1	0.4
	Plaster	-0.1	0.4
	Wood	-0.1	0.4

*Precision at 1 standard deviation.

CLASSIFICATION RESULTS:

XRF results are classified as positive if they are greater than the upper boundary of the inconclusive range, and negative if they are less than the lower boundary of the inconclusive range, or inconclusive if in between. The inconclusive range includes both its upper and lower bounds. Earlier editions of this *XRF Performance Characteristics Sheet* did not include both bounds of the inconclusive range as "inconclusive." While this edition of the Performance Characteristics Sheet uses a different system, the specific XRF readings that are considered positive, negative, or inconclusive for a given XRF model and substrate remain unchanged, so previous inspection results are not affected.

DOCUMENTATION:

An EPA document titled *Methodology for XRF Performance Characteristic Sheets* provides an explanation of the statistical methodology used to construct the data in the sheets, and provides empirical results from using the recommended inconclusive ranges or thresholds for specific XRF instruments. For a copy of this document call the National Lead Information Center Clearinghouse at 1-800-424-LEAD. A HUD document titled *A Nonparametric Method for Estimating the 5th and 95th Percentile Curves of Variable-Time XRF Readings Based on Monotone Regression* provides supplemental information on the methodology for variable-time XRF instruments. A copy of this document can be obtained from the HUD lead web site, www.hud.gov/lea.

This edition of the XRF Performance Characteristic Sheet was developed by QuanTech, Inc., under a contract from the U.S. Department of Housing and Urban Development (HUD). HUD has determined that the information provided here is acceptable when used as guidance in conjunction with Chapter 7, Lead-Based Paint Inspection, of HUD's *Guidelines for the Evaluation and Control of Lead-Based Paint Hazards in Housing*

APPENDIX E

REPRESENTATIVES PICTURES OF POSITIVE COMPONENTS

LUIS MUÑOZ RIVERA PUBLIC PLAZA

APPENDIX F

Existing and demolition floor plan

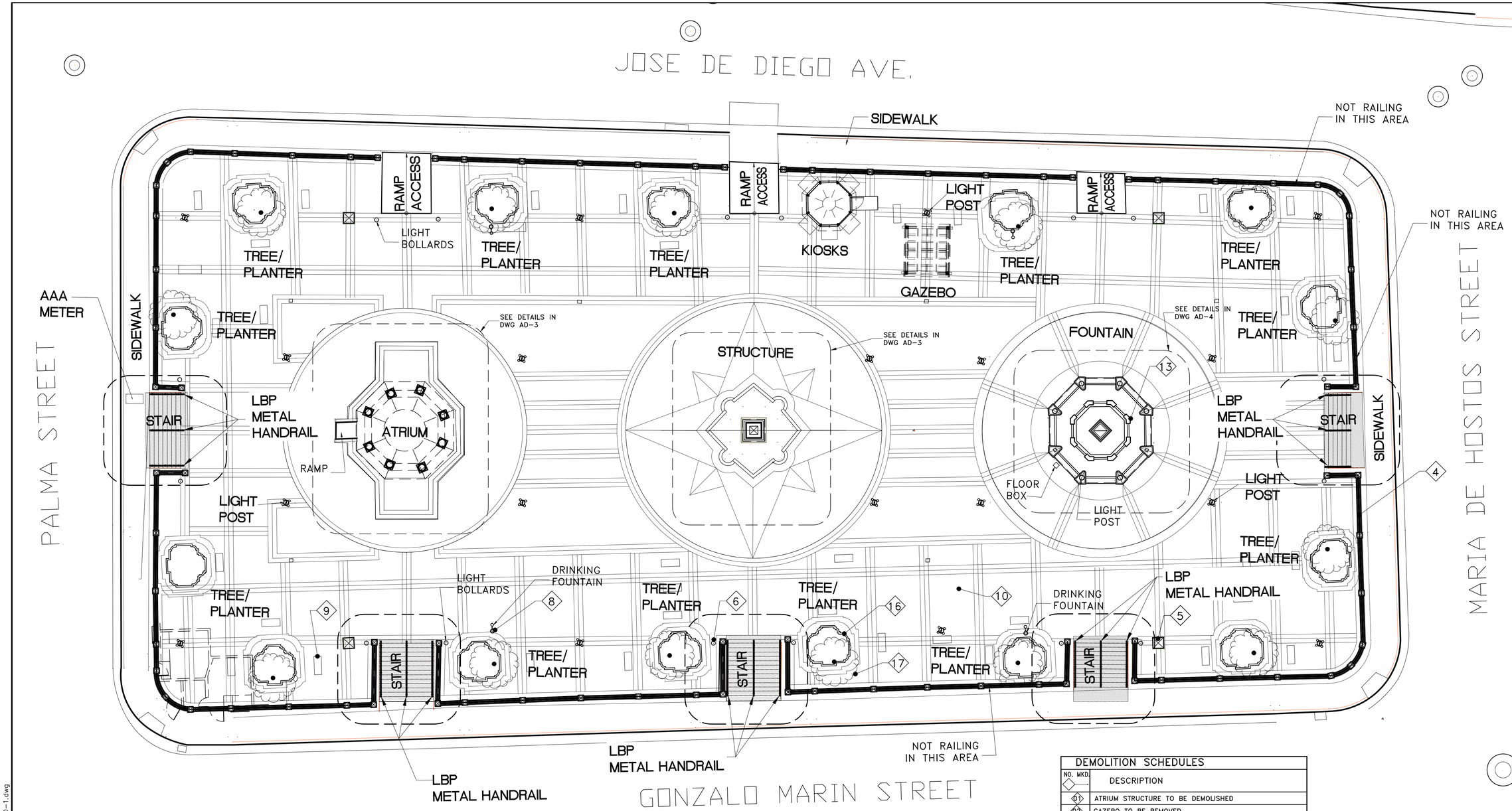

LEGEND:

LBP METAL HANDRAIL

EXISTING AND DEMOLITION PLAZA FLOOR PLAN

SCALE: 3/32"=1'-0"

NORTH

DEMOLITION SCHEDULES	
NO. MKD.	DESCRIPTION
01	ATRIUM STRUCTURE TO BE DEMOLISHED
02	GAZEBO TO BE REMOVED
03	STAIR RAILING AND FRAMED TO BE REMOVED
04	GRILLES RAILING AND COLUMN TO BE REMOVED
05	CONCRETE MONUMENT TO BE REMOVED
06	LIGHT BOLLARDS TO BE REMOVED
07	LIGHT POST TO BE REMOVED
08	DRINKING FOUNTAIN TO BE REMOVED
09	BENCH TO BE REMOVED
10	FLOOR FIN. TO BE REMOVED W/ NEW FLOOR TILES
11	CONCRETE LOW WALL TO BE DEMOLISHED
12	STRUCTURE OF THE CENTER TO REMAIN AND BE RESTORED
13	FOUNTAIN AND WALL TO BE DEMOLISHED
14	KIOSKS TO BE DEMOLISHED
15	GAZEBO TO BE DEMOLISHED
16	PLANTER RO BE DEMOLISHED
17	TREE TO REMAIN
18	ELECTRICAL ROOM TO BE REMODELED

NOTE:
1. THE CONTRACTOR WILL DISPOSE OF ALL THE EQUIPMENT REMOVED, WILL BE DELIVERED TO THE MUNICIPALITY.
2. FOR STRUCTURES DETAILS SEE DWG. AD-3,4.

REVITALIZATION OF
LUIS MUÑOZ RIVERA PLAZA
IN THE URBAN CENTER
ARECIBO, PUERTO RICO

IGLESIAS•VAZQUEZ and ASSOCIATES
ENGINEERS · ARCHITECTS · PLANNERS
320 FORTALEZA STREET 2nd FLOOR SAN JUAN, PUERTO RICO 00902 TELS. 721-4545 721-4546

SHEET TITLE: EXISTING AND DEMOLITION PLAZA FLOOR PLAN
SCALE: AS SHOWN

CODE NO: 08-903-

DRAWING NO: AD-1

DATE	REVISIONS

SHEET NO: OF 00

N:\Proj\ARECIBO\903 PLAZA ARECIBO\FINAL 90%\PLOMO\003-903AD-1.dwg

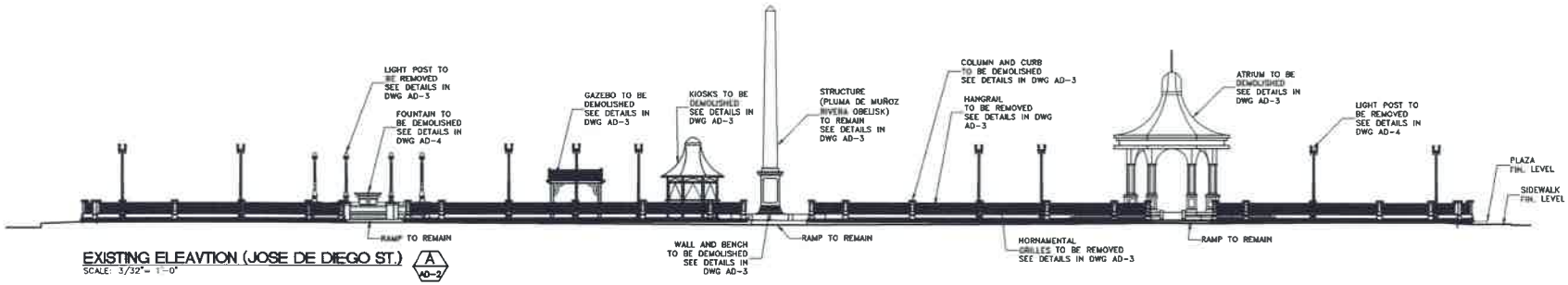

EXISTING ELEAVTION (JOSE DE DIEGO ST.) A AD-2
SCALE: 3/32"= 1'-0"

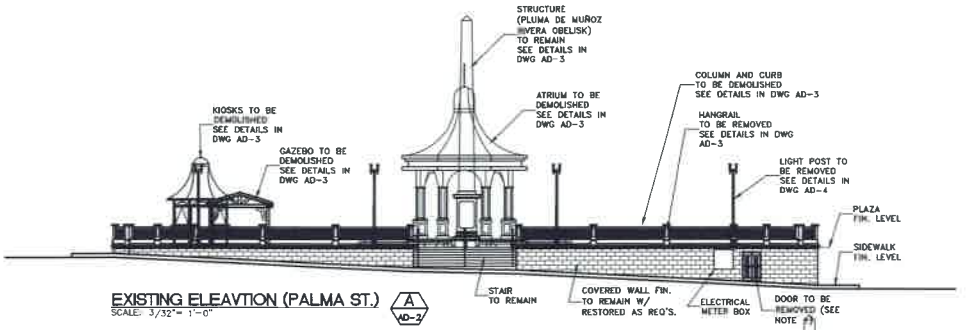

EXISTING ELEAVTION (PALMA ST.) A AD-2
SCALE: 3/32"= 1'-0"

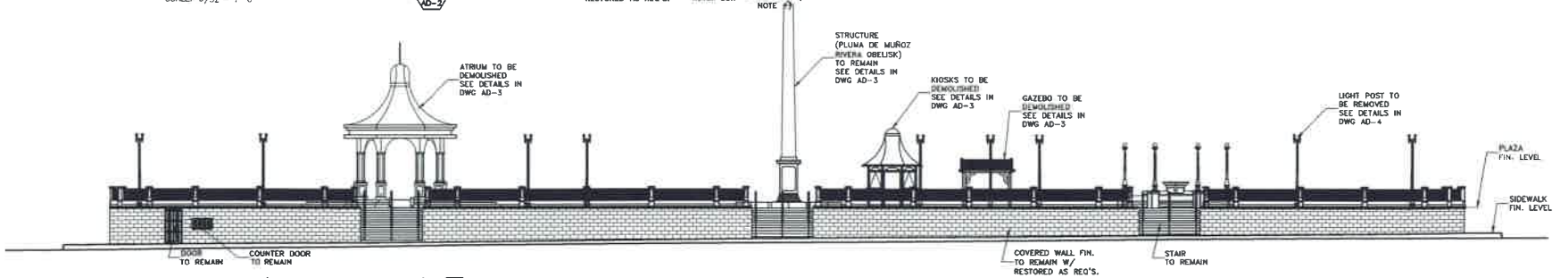

EXISTING ELEAVTION (GONZALEZ MARIN ST.) A AD-2
SCALE: 3/32"= 1'-0"

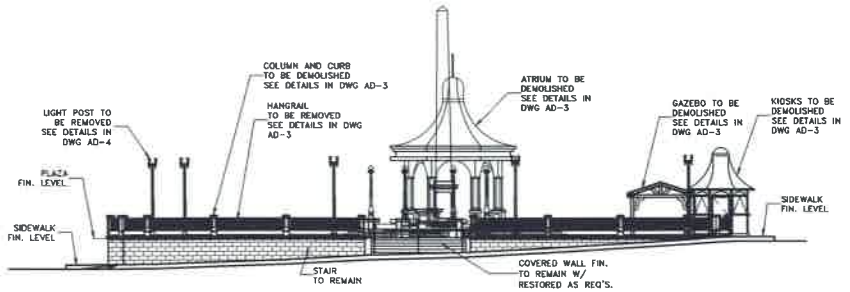

EXISTING ELEAVTION (MARIA DE HOSTOS ST.) A AD-2
SCALE: 3/32"= 1'-0"

DATE	REVISIONS

REVITALIZATION OF
LUIS MUÑOZ RIVERA PLAZA
IN THE URBAN CENTER
ARECIBO, PUERTO RICO

IGLESIAS • VAZQUEZ and ASSOCIATES
ENGINEERS • ARCHITECTS • PLANNERS
310 FORTALEZA STREET 3rd FLOOR SAN JUAN, PUERTO RICO 00901 TELS. 721-4845 721-4846

SHEET TITLE: EXISTING ELEVATION
SCALE: AS SHOWN
CODE NO: 08-903-
DRAWING NO: AD-2
SHEET NO: OF 00

N:\Proj\ARECIBO\903 PLAZA ARECIBO\FINAL 90% 903-903AD-1.dwg

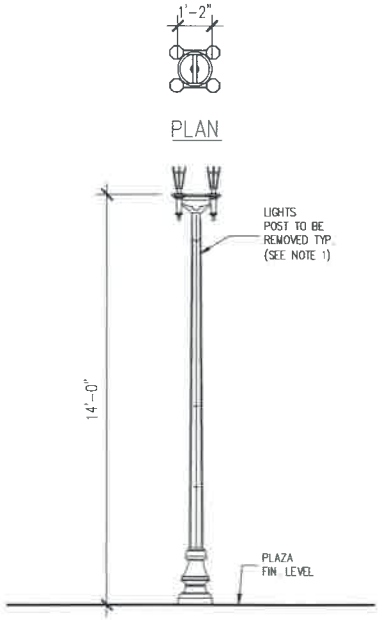

PLAZA LIGHT POLE DETAILS
SCALE: 1/2"=1'-0"

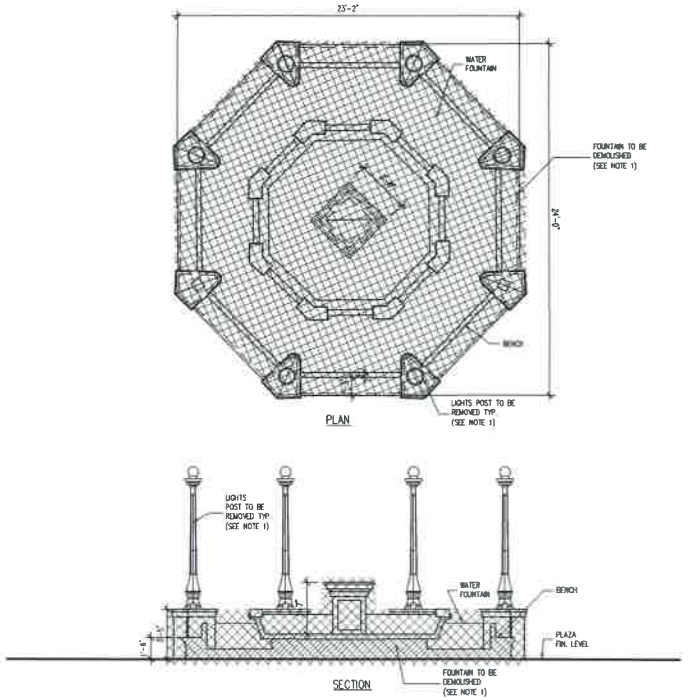

FOUNTAIN DETAILS
SCALE: 1/4"=1'-0"

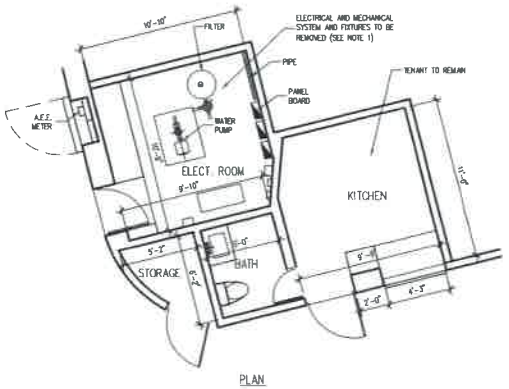

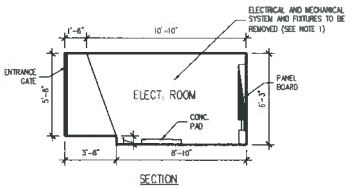

ELECTRICAL ROOM AND KIOSKS DETAILS
SCALE: 1/4"=1'-0"

REVITALIZATION OF
LUIS MUÑOZ RIVERA PLAZA
IN THE URBAN CENTER
ARECIBO, PUERTO RICO

IGLESIAS • VAZQUEZ and ASSOCIATES
ENGINEERS · ARCHITECTS · PLANNERS
320 FORTALEZA STREET 2nd FLOOR SAN JUAN, PUERTO RICO 00902 TELS. 721-4345 721-4346

SHEET TITLE:
PLAZA MISCELLANEOUS DETAILS
SCALE: AS SHOWN

CODE NO:
08-903-

DRAWING NO:
AD-3

SHEET NO:
OF
00

DATE	REVISIONS

N:\Proj\ARECIBO\903 PLAZA ARECIBO\FINAL 9185\903-AD3.MD-1.dwg

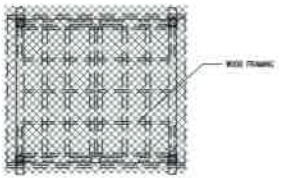

PLAN

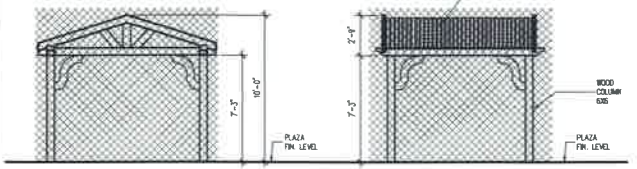

FRONT ELEVATION LATERAL ELEVATION

GAZEBO DETAILS
SCALE: 1/4"=1'-0"

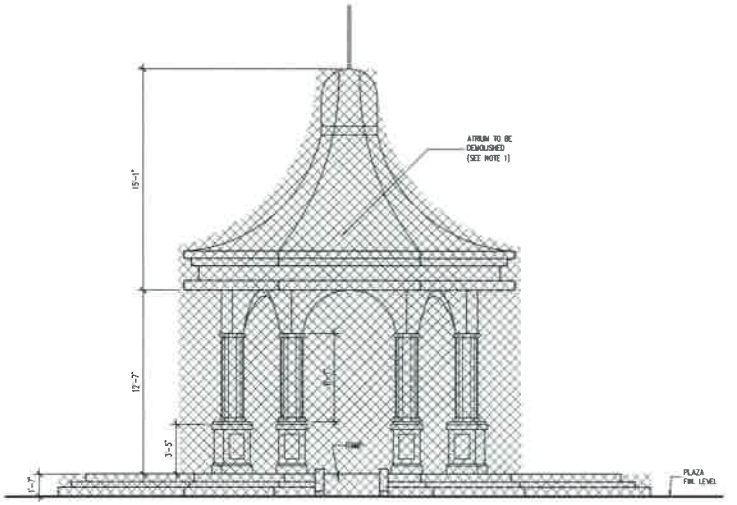

ELEVATION

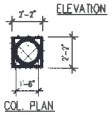

COL. PLAN

ATRIUM DETAILS
SCALE: 1/4"=1'-0"

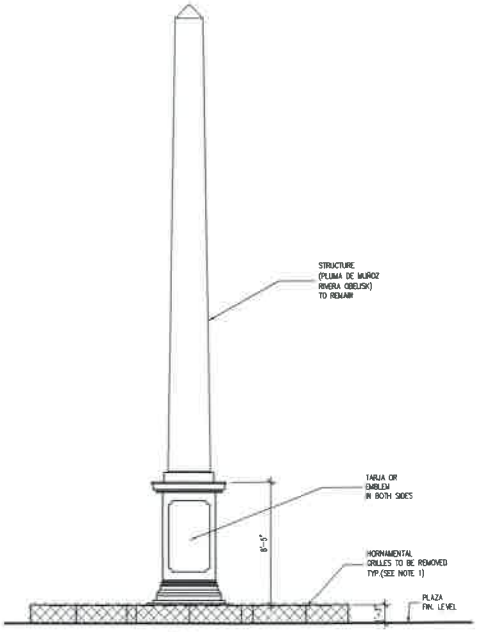

ELEVATION

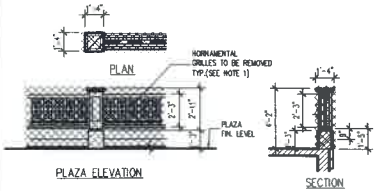

PLAZA ELEVATION

SECTION

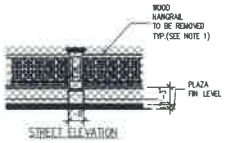

STREET ELEVATION

RAILING FLOOR PLAN
SCALE: 1/4"=1'-0"

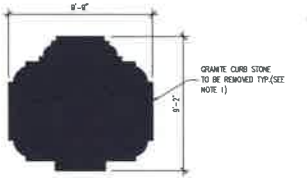

PLAN

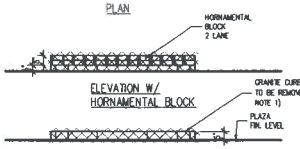

ELEVATION W/ ORNAMENTAL BLOCK

ELEVATION

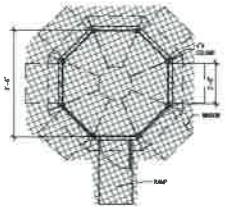

PLAN

PLANTING DETAIRS
SCALE: 1/4"=1'-0"

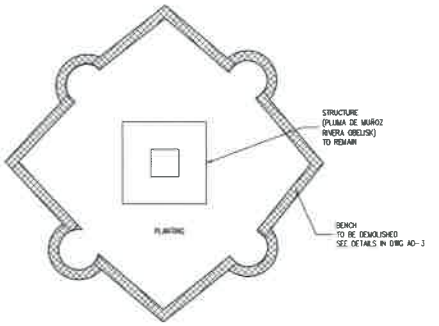

BENCH PLAN

STRUCTURE DETAIRS
SCALE: 1/4"=1'-0"

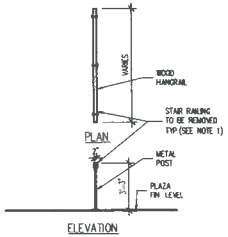

PLAN ELEVATION

STAIR RAILING DETAILS
SCALE: 1/4"=1'-0"

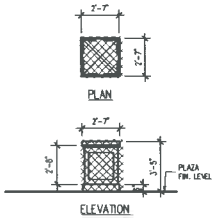

PLAN ELEVATION

CONCRETE BOLLAR DETAILS
SCALE: 1/4"=1'-0"

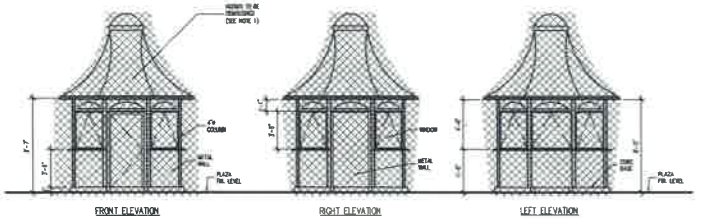

KIOSK DETAIRS
SCALE: 3/16"=1'-0"

REVITALIZATION OF
LUIS MUÑOZ RIVERA PLAZA
IN THE URBAN CENTER
ARECIBO, PUERTO RICO

IGLESIAS • VAZQUEZ and ASSOCIATES
ENGINEERS • ARCHITECTS • PLANNERS
330 FORTALEZA STREET 2nd FLOOR SAN JUAN, PUERTO RICO 00902 TELS. 721-4945 721-4944

SHEET TITLE:
PLAZA MISCELLANEOUS DETAILS
SCALE: AS SHOWN

CODE NO:
08-903-

DRAWING NO:
AD-4

SHEET NO:
OF
00

DATE	REVISIONS

N:\Proj\ARECIBO\903\PLAZA ARECIBO\FINAL 90%\903-903AD-1.dwg

U.S. DEPARTMENT OF HOUSING AND URBAN DEVELOPMENT
WASHINGTON, DC 20410-7000

OFFICE OF COMMUNITY PLANNING
AND DEVELOPMENT

Special attention of:
Regional Directors
Field Office Directors
CPD Directors and field office staff
OEE Directors and field office staff
PIH Directors and field office staff
Office of Housing Directors and division staff
ONAP Administrators and field office staff
OLHCHH Directors and Healthy Homes Representatives
Program Environmental Clearance Officers
Responsible Entities
Public Housing Authorities
Tribes
Tribally Designated Housing Entities

Notice: CPD-23-103

Issued: January 11, 2024
This notice will be effective 90 days after the date issued. For Tribes, Tribally Designated Housing Entities, and Department of Hawaiian Homelands Recipients, however, it will be effective two years after the date issued.

Expires: This Notice is effective until amended, superseded, or rescinded

SUBJECT: Departmental Policy for Addressing Radon in the Environmental Review Process

I. Purpose

The purpose of this Notice is to clarify that radon must be considered in the contamination analysis for 24 CFR Parts 50 or 58, as applicable; to provide guidance on recommended best practices for considering radon; and to identify the U.S. Department of Housing and Urban Development (HUD) programs that have established specific radon guidance. This Notice does not impose radon testing requirements; however, it does include guidance on strategies for considering radon in the site contamination analysis.

This notice applies *only* to projects that are subject to HUD's contamination regulations at 24 CFR 50.3(i) or 24 CFR 58.5(i). It does not apply to the purchase of single family homes with an FHA-backed mortgage nor Section 184 and Section 184A loan guarantees. This notice also does *not* preempt any existing, federal state, or local requirements regarding radon. It also does not preempt the radon requirements found in HUD's Office of Housing programs following the Multifamily Accelerated Processing (MAP) Guide, Healthcare Mortgage Insurance Program Handbook, Rental Assistance Demonstration Program Notice and supplemental guidance, or other current or future radon guidance that is more prescriptive. See section IV of this notice for links to Housing radon guidance documents.

Compliance with this notice is required 90 days after the date issued for all HUD programs subject to 24 CFR Parts 50 and 58, with the exception of Tribe, Tribally Designated Housing Entity (TDHE), and Department of Hawaiian Homeland (DHHL) recipients. In

recognition of the need to provide additional support for radon programs, compliance with this notice is required starting January 11, 2026 for Tribe, TDHE, and DHHL recipients.

II. Radon and its health effects

Radon is a radioactive gas that forms when radium and certain other radioactive metals break down in rocks, soil, and water.[1] It is found in nearly all soils and moves through the soil to the air and into structures through cracks and other areas of permeability. Building materials and groundwater may also be a source of indoor radon. Once inside, radon concentrations can build to high levels, regardless of the age, condition, or design of the building.

The most common pathway for human exposure to radon is inhalation indoors. Radon is the number one cause of lung cancer in non-smokers and the second leading cause of lung cancer overall.[2] The risk of adverse health effects from radon in indoor air depends largely on two main variables: the level of radon exposure and the length of time exposed. Many radon-induced lung cancers can be prevented by testing and reducing radon levels in existing buildings and by using radon resistant construction techniques for all new construction.[3]

The goal for mitigating radon in buildings is to reduce radon concentrations in indoor air as low as reasonably achievable and practicable considering the efficacy of current industry-standard radon reduction systems and environmental conditions (e.g., geology and climate). The most effective strategy to protect the health and safety of occupants is to prevent radon from entering the building by using radon resistant construction techniques; another effective strategy is to reduce the level of radon inside existing buildings by installing and operating a radon reduction system. An effective radon reduction system achieves two main goals: it reduces the concentration of radon gas in the home by venting it safely outside the structure and removes the radon gas from under the foundation before it can come into the home.

III. Considering radon in the environmental review

HUD's environmental regulations at 24 CFR 58.5(i)(2)(i) and (ii)[4] state that,

> [i]t is HUD's policy that all properties that are being proposed for use in HUD programs **be free of hazardous materials, contamination, toxic chemicals and gases, and radioactive substances**, where a hazard could affect the health and safety of occupants or conflict with the intended utilization of the property.
>
> The environmental review of multifamily housing . . . , **must include the evaluation of** . . . other evidence of contamination on or near the site, to ensure that occupants of proposed sites are not

[1] National Institute of Health, Periodic Table, Element Summary, "Radon", https://pubchem.ncbi.nlm.nih.gov/element/Radon.
[2] U.S. Environmental Protection Agency, "Health Risk of Radon", https://www.epa.gov/radon/health-risk-radon.
[3] https://www.epa.gov/radon/health-risk-radon.
[4] HUD's contamination policy at 24 CFR 50.3(i)(1) and (2) implements the same substantive policy with slightly different text, https://www.ecfr.gov/current/title-24/subtitle-A/part-50/subpart-A/section-50.3.

adversely affected by any of the hazards listed in paragraph (i)(2)(i) of this section.

As radon is a radioactive substance, HUD or the responsible entity (RE) must consider it as part of the site contamination analysis for projects that:

- Require an environmental review at the level of *Categorically Excluded Subject to 50.4 or 58.5* ("CEST"), *Environmental Assessment*, or *Environmental Impact Statement*; and
- Involve structures that are occupied or are intended to be occupied at least four (4) hours a day.

Note: HUD's contamination policy does not apply to projects that are Exempt or Categorically Excluded Not Subject to 50.4 or 58.5 ("CENST").

HUD encourages environmental review preparers to follow the most recent U.S. Environmental Protection Agency (EPA) recommendations about assessing the health risk from radon exposure and when to reduce radon levels in indoor air. Because more people are exposed to moderate levels of radon, most radon-induced lung cancer results from long-term exposure to low or moderate radon levels in the home, as opposed to short term exposure to very high levels of radon.[5] The EPA recommends homes be fixed if the radon level is 4 pCi/L or more. Because there is no known safe level of exposure to radon, EPA also recommends that Americans consider fixing their home for radon levels between 2 pCi/L and 4 pCi/L[6]. Indoor air radon levels vary across the U.S. and from parcel to parcel due to differences in geology, climate, seasonal variation, building construction, and other conditions. Additionally, because radon cannot be seen, tasted, or smelled, the only method for determining the precise radon level in a specific building is to test the indoor air.

Exemptions from having to consider radon in the contamination analysis[7]:

- Buildings with no enclosed areas having ground contact.
  - Buildings containing crawlspaces, utility tunnels, or parking garages would *not* be exempt, however buildings built on piers would be exempt, provided that there is open air between the lowest floor of the building and the ground.
- Buildings that are not residential and will not be occupied for more than 4 hours per day.
- Buildings with existing radon mitigation systems - document radon levels are below 4 pCi/L[8] with test results dated within two years of submitting the application for HUD assistance and document the system includes an ongoing maintenance plan that includes periodic testing to ensure the system continues to meet the current EPA recommended levels. If the project does not require an application, document test results dated within

[5] World Health Organization, *Handbook on Indoor Radon; A Public Health Perspective* (January 1, 2009). p. x, 2, https://www.who.int/publications/i/item/9789241547673.
[6] https://www.epa.gov/radon/what-epas-action-level-radon-and-what-does-it-mean
[7] These exemptions are specific to this notice and do not all comport with the requirements in the MAP Guide, Healthcare Mortgage Insurance Program Handbook, RAD Program Notice and supplemental guidance or other program guidance.
[8] Or the EPA's current recommended level for reducing radon levels in indoor air, https://www.epa.gov/radon/health-risk-radon.

two years of the date the environmental review is certified. Refer to program office guidance to ensure compliance with program requirements.

- Buildings tested within five years[9] of the submission of application for HUD assistance: test results document indoor radon levels are below current the EPA's recommended action levels of 4.0 pCi/L. For buildings with test data older than five years, any new environmental review must include a consideration of radon using one of the methods in Section A below.

A. How to consider radon in the HUD Environmental Review

This section details how environmental review preparers may consider radon in the HUD environmental review in order to satisfy 24 CFR 50.3(i) or 24 CFR 58.5(i) [10]. This section provides a recommended "best practice" method; however, preparers may utilize one of the alternate options if they choose not to implement the best practice.

i. Recommended Best Practice

When considering radon in the contamination analysis, HUD strongly recommends using the American National Standards Institute/American Association of Radon Scientists and Technologists (ANSI/AARST) radon testing standards for single- and multi- family buildings, schools, and large buildings, including those constructed using radon-resistant construction techniques.[11] The ANSI/AARST standard describes how to conduct testing, interpret test results, and draft a Radon Test Report to document the process for the building owner (and to use as documentation for the ERR).

The ANSI/AARST standards can be viewed online for free and are intended to be implemented by licensed radon professionals. To find a licensed radon professional in your area contact the State/Tribe's radon program office,[12] National Radon Proficiency Program (NRPP),[13] or the National Radon Safety Board (NRSB).[14]

There may also be state and/or local radon requirements, depending on the jurisdiction. Contact the relevant State/Tribal radon control program to ensure the project complies with State/Tribal requirements.[15]

Note: Although testing is not required under this notice, *testing is the only way to determine the radon level within a building.*

---

[9] Note that the allowance for the use of test results within the previous five years is specific to this notice and does *not* comport with the ANSI/AARST standards.

[10] This section does not apply to projects that are subject to the MAP Guide, Healthcare Mortgage Insurance Program Handbook or RAD Program Notice and supplemental guidance or other current or future HUD radon guidance that is more prescriptive.

[11] ANSI/AARST Standards (In lieu of developing a federal radon testing standard, the EPA references the ANSI/AARST Standards), https://standards.aarst.org/ (https://www.epa.gov/radon/radon-standards-practice).

[12] The National Radon Program Services, "State Radon Programs Information", https://sosradon.org/state.

[13] NRPP, https://nrpp.info.

[14] NRSB, https://www.nrsb.org.

[15] https://sosradon.org/state.

ii. Alternative Options

Using the ANSI/AARST radon testing standards is not the only option available for considering the risk that occupants may be exposed to high radon levels.[16] If the environmental review preparer chooses not to conduct radon testing per the ANSI/AARST standards, one of the following alternative strategies[17] must be used to consider radon in the contamination analysis. Review the HUD program office guidance in Section IV to ensure the strategy used to consider radon in the contamination analysis complies with specific program office requirements for the project.[18]

1. Do-it-yourself (DIY) radon test kits may be used to measure radon levels in single-family dwelling units. In HUD single-family buildings[19] with multiple units, one DIY test kit must be used for each dwelling unit. DIY radon test kits may be available for low or no cost through State/Tribal radon program offices and are available to purchase through the National Radon Program Services website and some state radon control program websites.[20]

When using a DIY test kit, there can be quality control issues that affect the quality of the test results. To ensure the DIY test results are as accurate as possible, it is important to read the entire test kit instructions before activating the test device and to follow them fully. The EPA's *Citizen's Guide to Radon*[21] and the ANSI/AARST standard for testing single-family housing are excellent resources for detailed instructions about conducting the radon test, including where to place the test device(s), how to prepare the home (whether to close the windows, turn off fans, the length of time to test), how to document the test process, and interpret the results. HUD encourages that test devices be approved by either the NRPP or NRSB. Contact the National Radon Program Services helpline, the State/Tribal radon program office, or the local health department for assistance.[22]

2. In remote or other areas where there are no licensed/certified radon professionals and/or DIY test kits cannot be shipped to a lab in sufficient time, the local government, such as a local health department or environmental department, may decide to purchase radon monitoring equipment and train staff to use it. Monitoring equipment, such as continuous radon monitors, should be used in accordance with the manufacturer's instructions and intended use and staff should ensure proper quality control and quality assurance practices are adhered to.

---

[16] High levels of radon are those that are at or above 4 pCi/L.
[17] Alternative to measuring radon levels in indoor air using the ANSI/AARST standards.
[18] Note: REs and HUD must also ensure that the strategy used complies with any state or local laws and regulations regarding radon.
[19] HUD defines "single family building" as a residential building with one to four dwelling units.
[20] National Radon Program Services, https://sosradon.org/purchase-kits.
[21] EPA, *A Citizen's Guide to Radon: The Guide to Protecting Yourself and Your Family from Radon* (EPA 402/K-12/002, December 2016), https://www.epa.gov/radon/publications-about-radon.
[22] The National Radon Program Services, which has phone, email, and mail connections, is operated by Kansas State University for the US EPA, https://sosradon.org/Contact. (The phone numbers may also be reached by persons with hearing or speech difficulties by dialing 711 via teletype (TTY) or telecommunications device for the deaf (TDD)).

3. Scientific data review. Available science-based information may be used to determine whether the project site is located in an area that has average documented radon levels at or above 4 pCi/L. Contact the State/Tribal radon program office (or health department), as needed, for assistance with obtaining and interpreting available science-based information about radon levels in the area. Science-based information includes, but is not limited to:

- State/Tribe-generated radon information, such as surveys of radon levels from collecting radon measurement data or geological studies that identify high risk areas.
- Department of Health and Human Services, Centers for Disease Control and Prevention (CDC), National Environmental Public Health Tracking, Radon Testing map.[23] This map provides radon test data from national radon testing laboratories and states that can be viewed by state or county. Radon test data ranges from 1988 to the present.

Environmental review preparers may *not* use the EPA Map of Radon Zones nor EPA State Maps of Radon Zones for considering radon levels at a project site for compliance with 24 CFR 50.3(i) or 24 CFR 58.5(i) because it is not appropriate for a site-specific analysis of radon risk, which is required for a HUD environmental review.

Note: Although science-based, a document review *does not* determine the radon level in a specific building; where feasible, HUD recommends using one of the radon testing strategies.

When conducting a scientific data review in lieu of testing, there must be a minimum of 10 (ten) documented test results over the previous 10 years for which data is available in a given county for the scientific data review approach to be utilized. If there are less than 10 documented results over this period, then there is a lack of scientific data for the purposes of this notice and no further consideration of radon is needed if testing is infeasible or impracticable.

Additionally, testing data utilized should cover the smallest geographic area for which the minimum amount of documented test results exist, up in size to the county in which the project is located. The best available data must be used. Best available data refers to the most current data that best indicates the level of radon concentration at a project site. Whenever possible, utilize the average of the previous 10 years of data.

There may be certain scenarios in which use of the Recommended Best Practice or Alternative Options identified above may not be feasible or practicable due to limited access to testing (e.g., lack of licensed radon professionals in the project area) and lack of scientific data (e.g., there are less than 10 documented test results over the previous 10 years). Refer to section **C. Documenting the environmental review record** below for documentation requirements in these scenarios.

[23] CDC, "National Environmental Public Health Tracking, Radon Testing", https://www.cdc.gov/nceh/tracking/topics/RadonTesting.htm.

B. Mitigating Radon

When radon testing determines indoor air radon levels are at or above 4 pCi/L or the scientific data review determines the project site is located in an area that has documented radon levels at or above 4 pCi/L, the Environmental Review Record (ERR) must include a mitigation plan. When the determination is based on a scientific data review, if feasible, HUD recommends conducting radon testing (using one of the testing strategies described in the previous sections) to confirm radon levels in the building(s) proposed for HUD funding. If testing then demonstrates that radon levels within the building are below 4 pCi/L, mitigation would *not* be required; environmental review preparers can simply document the test results in the ERR.

The mitigation plan[24] must identify the radon level; consider the risk to occupants' health; describe the radon reduction system that will be installed; whenever possible, establish an ongoing maintenance plan to ensure the system is operating as intended; establish a reasonable timeframe for implementation (i.e., integrate radon mitigation activities into an annual plan or a 5-year plan that is already completed for HUD funded activities); and require post-installation testing. Where feasible, post-installation testing should be conducted by a licensed radon professional. In an area where there are no licensed radon professionals, there may be other personnel, such as trained staff, other professionals (i.e., engineers, geologist, scientists, public health staff) who have experience conducting radon testing or have the relevant skills and knowledge to follow the device instructions or ANSI/AARST test protocols and mitigation standards. For assistance Contact the EPA's local radon program office, state/Tribe radon program office, the National Radon Program Services,[25] or refer to the applicable ANSI/AARST standard for guidance.

If using the ANSI/AARST mitigation standard to install the radon reduction system, follow the guidance in the standard to draft the mitigation and the operation, maintenance, and monitoring plans.

C. Documenting the environmental review record

Under HUD's regulations, 24 CFR 58.38(a)(3) or 50.11, HUD, or the RE, is required to document the radon evaluation as part of the contamination analysis in the ERR. For ERRs documented using the HUD Environmental Review Online System (HEROS), document the radon evaluation in the Contamination and Toxic Substances factor Compliance Determination screen and upload supporting documentation. For Office of Housing projects, document the radon evaluation in the HEROS Housing Requirements Screen.

If testing is not conducted and not otherwise required by program guidance, the documentation will need to provide evidence of average documented radon test results covering the project site or its county, other science-based information suggesting radon levels at the project site, or evidence of a lack thereof.

---

[24] Example of an areawide radon testing plan: Home Forward, Multnomah County, Oregon at: http://homeforward.org/content/radon-information.

[25] EPA Regional, State, and Tribal Radon contacts, https://www.epa.gov/radon/epa-map-radon-zones-and-supplemental-information#datainfo; National Radon Program Services, https://sosradon.org/main or 800 644-6999.

In instances where radon testing will be conducted but cannot be conducted until after the environmental review record is certified -such as with new construction or certain rehabilitation projects- then the initial documentation would not include a radon evaluation but must include a condition for post-construction radon testing followed by mitigation if needed. The environmental preparer must update the environmental review record with the radon evaluation and proof of any required mitigation when complete.

Acceptable methods to document radon consideration in the ERR include:

- ANSI/AARST standard: Include a copy of the test report and mitigation plan (if applicable) as described in the standard in the ERR. For Office of Housing programs, follow program guidance requirements on timing and documentation.

- DIY and other radon test strategies: Document the test device, time period of test, test conditions (HVAC system off windows closed, outside temperature), test results, and other conditions relevant to test conditions. Refer to the applicable ANSI/AARST standard as guidance.

- Review of CDC radon testing data, geologic studies/maps, other scientific data: Describe and cite the maps and data used to determine the area wide radon levels and include copies of all supporting documentation (maps/studies) in the ERR.

- In instances where HUD grantees, applicants, and recipients are unable to obtain science-based data, environmental review preparers must consider the feasibility of radon testing if they have not already. If the grantee, applicant, or recipient determines that testing is infeasible or impracticable, the environmental review must document the basis for this determination.[26]. Acceptable documentation in these scenarios where testing is infeasible and science-based data is not available includes but is not limited to: correspondence with state and local radon control agencies indicating a lack of scientific data evidencing radon levels at the project site, a copy of CDC Environmental Health Tracking Network information showing the project site is located in a county with a lack of scientific data, and a basis for the conclusion that testing would be infeasible or impracticable. The RE, grantee, applicant, or recipient is not required to submit additional documentation substantiating their decision that testing is infeasible or impracticable.

- When all this is documented in the ERR, *no* further consideration of radon is needed and no further action with respect to radon is needed for the environmental review. .

Examples of acceptable documentation of radon consideration in the ERR:

- A project site is located in a county in which the CDC Radon Testing data shows that more than 10 tests have been conducted over the last 10 years. The average of the 200 tests completed in the county over the last 10 years is 4.5 pCi/L. Since scientific data

[26] Common instances where this determination may occur include a lack of funding for testing or the cost of testing is prohibitively high when compared with the cost of a particular low-dollar project.

indicates that average radon levels in the county in which the project is located are greater than 4.0 pCi/L, the grantee must either test for radon or formulate a mitigation plan they will implement.

- Radon testing data from the CDC Environmental Public Health Tracking Network map shows data for the county in which the project site is located, which is the smallest area for which data is available. The data shows the annual mean pre-mitigation radon measurement in tested buildings for the most recent 10-year period as 1.8 pCi/L. There is no other available evidence of radon levels in the area. The local government chooses to establish a radon testing plan to confirm radon levels in specific buildings are below 4 pCi/L. The test plan timeframe aligns with the RE's housing rehabilitation plan.

- A project site is located in a county in which the CDC Radon data shows that more than 10 tests have been conducted over the last 10 years. The average of the 220 tests completed in the county over the last 10 years in 3.2 pCi/L. The responsible entity or HUD reviewer documents the results in the environmental review records and therefore satisfies this notice's requirement that radon be considered as part of the environmental review process.

- A project site is located in a county in which the CDC data shows that fewer than 10 tests have been conducted over the last 10 years. The RE or HUD reviewer documents the lack of scientific data in the environmental review records. The RE has reviewed the cost of radon testing for the project and determined that testing is infeasible because the cost to test for this project would cut too much into the project's small budget. They note this determination in the environmental review record.

The local EPA radon contact person and the National Radon Program Services may be able to assist with developing a testing plan. The EPA's *A Citizen's Guide to Radon* (for single family homes) and the ANSI/AARST standards (single family and multifamily buildings) are a good source for guidance on the information that is included in a test plan.

Note: HUD or a Responsible Entity must reject projects in areas that have sufficient documented radon levels at or above 4 pCi/L if no mitigation has been proposed or performed.

IV. HUD program office documents addressing radon

Current HUD program office guidance regarding radon testing and mitigation is listed below. Each HUD program office is responsible for issuing program-specific radon guidance. Program guidance may be updated as Departmental policies develop; be sure to use the most current guidance. Additionally, this notice does not preempt or modify existing HUD program-specific radon requirements, such as those found in the Multifamily Accelerated Processing (MAP) Guide, the Healthcare Mortgage Insurance Program Handbook 4232.1 Rev-1, the RAD Program Notice and Supplemental Notice 4B, or other current or future radon guidance that is more prescriptive**.** For questions concerning program office guidance, contact your program office representative.

- Office of Housing, *Multifamily Housing, Multifamily Accelerated Processing Guide* (4430.G), Section 9.6.3, https://www.hud.gov/program_offices/administration/hudclips/guidebooks/hsg-gb4430
- Office of Housing, Office of Residential Care Facilities, *Healthcare Mortgage Insurance Program Handbook* (4232.1), Section 7.8, Rev-1), or most recent edition, https://www.hud.gov/sites/documents/42321S2C7HSGH.PDF
- Office of Housing, Office of Recapitalization, Rental Assistance Demonstration (RAD) Program (Notice H-2019-09 PIH-2019-23 (HA)) and Supplemental Notice 4B (Notice H-2023-08 PIH-2023-19 (HA)), https://www.hud.gov/RAD/library/notices
    - Quick Reference Guide, Environmental Review Requirements for RAD Conversions (2020), https://www.hudexchange.info/resource/4216/environmental-review-requirements-for-rad-transactions/. Check RAD Resource Desk for future guidance, https://www.radresource.net/index.cfm
- Office of Public and Indian Housing (PIH), Radon Information for PIH Programs (Notice 2013-06 (HA)), https://www.hud.gov/sites/documents/PIH2013-06.PDF and https://www.hudexchange.info/programs/radon/

V. Resources

A. HUD resources for implementation of this notice

Costs for radon testing and mitigation are considered eligible program costs for many HUD grant programs. As such, costs for radon testing and mitigation could be included in the total project costs funded or insured by HUD. **Note:** Costs for ongoing operation and/or maintenance of installed mitigation systems may not be eligible under certain HUD programs. For questions about the eligibility of the ongoing maintenance of radon mitigation systems, as well as other funding-specific questions, contact your HUD program office contact.

Table A on the following page, notes the major HUD programs for which radon testing and/or mitigation under 24 CFR 50.3(i) or 24 CFR 58.5(i) is an eligible program expense. This list is non-exhaustive; for other HUD programs please contact the appropriate program office contact.

Table A: HUD programs and radon testing and mitigation as an eligible expense

Program or grant name	**Is radon testing an eligible expense?**	**Is radon mitigation an eligible expense?[27]**
Community Development Block Grant (CDBG)	Yes	Yes
Community Development Block Grant CARES Act (CDBG-CV)	Yes	Yes
Community Development Block Grant Disaster Recovery (CDBG-DR)	Yes	Yes
Community Development Block Grant Mitigation (CDBG-MIT)	Yes	Yes
Community Project Funding (CPF) Grants	Yes	Yes
Continuum of Care Program (CoC)	Yes	Yes
Emergency Solutions Grants Program	Yes	Yes
FHA-Insured Healthcare Loans	Yes	Yes
FHA-Insured Multifamily Loans	Yes	Yes
Green and Resilient Retrofit Program (GRRP)	Yes	Yes
HOME Investment Partnerships American Rescue Plan Program (HOME-ARP)	Yes	Yes
HOME Investment Partnerships Program (HOME)	Yes	Yes
Housing Opportunities for Persons With AIDS (HOPWA)	Yes	Yes
Housing Trust Fund (HTF)	Yes	Yes
HUD Section 8 renewals with capital repairs	Yes	Yes
HUD Section 8(bb) Transfer of Budget Authority.	Yes	Yes
Indian Community Development Block Grant (ICDBG)	Yes	Yes
Indian Housing Block Grant Program (IHBG)	Yes	Yes
Public Housing Capital and Operating Funds	Yes	Yes
Rental Assistance Demonstration (RAD)	Yes	Yes
Section 108 Loan Guarantee Program	Yes	Yes
Section 202 Supportive Housing for the Elderly Program	Yes	Yes
Section 811 Supportive Housing for Persons with Disabilities Program	Yes	Yes
Self-Help Homeownership Opportunity Program (SHOP)	Yes	Yes
Transfers of Rental Assistance with HUD Held or Insured Debt and/or Use Restrictions ("Section 209 Transfers.")	Yes	Yes

[27] Note: The term “radon mitigation” refers only to initial installation of a radon mitigation system and does ***not*** encompass ongoing maintenance.

B. Other radon resources

- EPA radon website, https://www.epa.gov/radonNational Radon Program Services, https://sosradon.org/
    - Helpline: 1-800-557-2366
    - Comprehensive radon information, links to state radon programs and radon testing and mitigation information, and access to radon helplines
- CDC, National Center for Environmental Health, "Radon", https://www.cdc.gov/radon/
    - National Environmental Public Health Tracking Network testing data map: https://www.cdc.gov/nceh/tracking/topics/RadonTesting.htm
- ANSI/AARST radon testing protocols and mitigation standards, https://standards.aarst.org/
- HUD 3-part radon webinar series sponsored by the Office of Lead Hazard Control and Healthy Homes and Public and Indian Housing, https://www.hudexchange.info/programs/radon/
- Office of Lead Hazard Control and Healthy Homes, *About Radon*, https://www.hud.gov/program_offices/healthy_homes/healthyhomes/radon
- OEE, *Radon Fact Sheet*, https://www.hudexchange.info/resource/4955/oee-radon-fact-sheet/
- OEE Radon and HUD-Assisted Projects Webinar Series, https://www.hudexchange.info/news/radon-and-hud-assisted-projects-webinar-series/

For questions concerning this Notice, contact your local OEE field environmental office staff, https://www.hudexchange.info/programs/environmental-review/hud-environmental-staff-contacts/

Appendix I:
Field Inspection Report

AG Environmental PSC

Engineering · Science · Field Services

Field Visit Report

Client	Municipality of Arecibo	**Site Name**	Plaza Luis Muñoz Rivera
Project Name	Public Plaza Renovation in Urban Center	**Site Location**	18.471980°, -66.715910°
Project Number	PR-CRP-000771	**Date Photos Taken**	November 1st, 2023

View:184° S

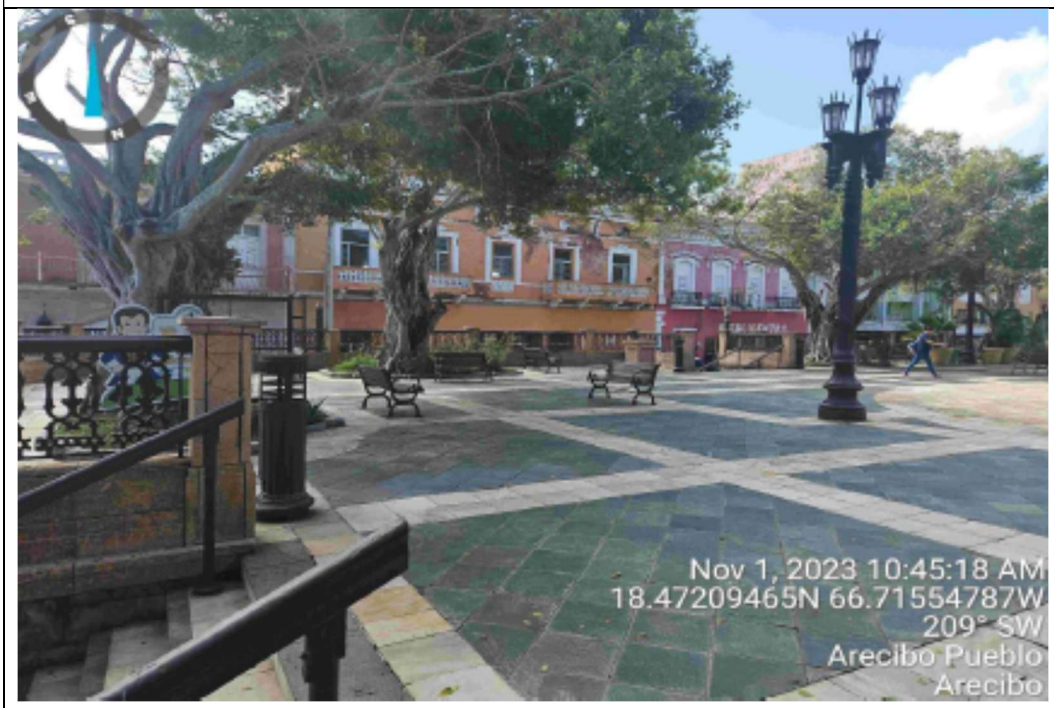

View: 209° SW

Client	Municipality of Arecibo	**Site Name**	Plaza Luis Muñoz Rivera
Project Name	Public Plaza Renovation in Urban Center	**Site Location**	18.471980°, -66.715910°
Project Number	PR-CRP-000771	**Date Photos Taken**	November 1st, 2023

View: 241° SW

View: 332° NW

Client	Municipality of Arecibo	**Site Name**	Plaza Luis Muñoz Rivera
Project Name	Public Plaza Renovation in Urban Center	**Site Location**	18.471980°, -66.715910°
Project Number	PR-CRP-000771	**Date Photos Taken**	November 1st, 2023

1. **Site Conditions**:

Topography and Soil:	
Surface type	Stone Tiles
Signs of erosion, soil contamination, or instability	None observed
Infrastructure:	
Structure conditions	- Electrical and water infrastructure is available - Some poles could be repaired - Some tiles have peeled off or are loose - Railings and banks around the square are broken
Water Sources:	
Identify nearby water bodies	The Atlantic Ocean is located approximately 188 meters north of the site. The Rio Grande de Arecibo is located approximately 190 meters south-southeast of the project site
Drainage patterns	Water drains in a southeast fashion towards the Rio Grande de Arecibo estuary
Potential sources of water contamination	None observed. Stormwater quality may vary.
Flood Zone	Zone X (map attached)

2. **Vegetation and Wildlife**:

Flora and Fauna:	
Types of vegetation and wildlife present	- Shrubs and trees are typical tropical vegetation commonly used in urban landscaping. - Wildlife present at the site may include birds, insects and reptiles.
Wetlands	The project sits in an upland.
Endangered species or invasive plants	Refer to the USFWS report (Attached)
Habitat Conditions:	
Health of the habitat	Good

Client	Municipality of Arecibo	**Site Name**	Plaza Luis Muñoz Rivera
Project Name	Public Plaza Renovation in Urban Center	**Site Location**	18.471980°, -66.715910°
Project Number	PR-CRP-000771	**Date Photos Taken**	November 1st, 2023

3. **Pollution Sources**:

Air Quality:	
Sources of air pollution	- The Municipality of Arecibo is currently in attainment with the National Ambient Air Quality Standards (NAAQS), as defined under 40 CFR Part 52 [EPA-R02-OAR-2016-0559; FRL-9964-87-Region 2] (see attached documentation). - Vehicle traffic emissions are considered the most likely source of air pollution at the site. - Refer to the NEPAssist report for additional potential sources (attached).
Water Quality:	
Signs of contamination	No obvious signs of contamination were identified

4. **Safety and Health:**

Site Safety:	
Physical hazards on the site	No physical hazards were observed
Unstable ground or hazardous materials	No instances observed

5. **Observations**

No obvious signs of adverse environmental conditions were identified.

Flood Insurance Map

Public Plaza Renovation in Arecibo Urban Center

Public Plaza Renovation in Urban Center - PRR-CRP-000771

Flood Insurance Map

Address: Ave. José de Diego #100 int. Calle Gonzalo Guinorio, Arecibo, PR 00613
Coordinates: 18.471980, -66.715910 (WGS 1984)

- Project Point
- Project Footprint
- No Digital Data Available
- Digital Data Available
- Unmapped
- LOMRs Effective
- Political Jurisdictions
- Profile Baselines
- Levees
- Coastal Transects
- Transect Baselines
- Base Flood Elevations
- Limit of Moderate Wave Action
- Limit lines SFHA/Flood Zone Boundary
- Flowage Easement Boundary
- 1% Annual Chance Flood Hazard
- Regulatory Floodway
- Special Floodway
- Area of Undetermined Flood Hazard
- 0.2% Annual Chance Flood Hazard
- Future Conditions 1% Annual Chance Flood Hazard
- Area with Reduced Risk Due to Levee
- Area with Risk Due to Levee

Scale: 1:6333
1 inch equals 0.1 miles

0 0.05 0.1 0.15 0.2 mi

Spatial Reference:
NAD83(NSRS2007) / Puerto Rico and Virgin Is.
Sources: FEMA National Flood Hazard Layer Viewer (FEMA-https://hazards-fema.maps.arcgis.com/apps/webappviewer/index.html?id=8b0adb51996444d4879338b5529aa9cd&extent=-67.12997043026961,18.382927508988438,-67.10216128720322,18.40328899374268). Esri Imagery Basemap service.

NEPAssist Report

Arecibo Town Square

NEPAssist Report

Arecibo Town Square

Project Location	18.472025,-66.715861
Within 3000 feet of an Ozone 8-hr (1997 standard) Non-Attainment/Maintenance Area?	no
Within 3000 feet of an Ozone 8-hr (2008 standard) Non-Attainment/Maintenance Area?	no
Within 3000 feet of a Lead (2008 standard) Non-Attainment/Maintenance Area?	yes
Within 3000 feet of a SO2 1-hr (2010 standard) Non-Attainment/Maintenance Area?	no
Within 3000 feet of a PM2.5 24hr (2006 standard) Non-Attainment/Maintenance Area?	no
Within 3000 feet of a PM2.5 Annual (1997 standard) Non-Attainment/Maintenance Area?	no
Within 3000 feet of a PM2.5 Annual (2012 standard) Non-Attainment/Maintenance Area?	no
Within 3000 feet of a PM10 (1987 standard) Non-Attainment/Maintenance Area?	no
Within 3000 feet of a Federal Land?	no
Within 3000 feet of an impaired stream?	no
Within 3000 feet of an impaired waterbody?	yes
Within 3000 feet of a waterbody?	yes
Within 3000 feet of a stream?	yes
Within 3000 feet of an NWI wetland?	Available Online
Within 3000 feet of a Brownfields site?	no
Within 3000 feet of a Superfund site?	no
Within 3000 feet of a Toxic Release Inventory (TRI) site?	no
Within 3000 feet of a water discharger (NPDES)?	yes
Within 3000 feet of a hazardous waste (RCRA) facility?	yes
Within 3000 feet of an air emission facility?	yes

Within 3000 feet of a school?	yes
Within 3000 feet of an airport?	no
Within 3000 feet of a hospital?	yes
Within 3000 feet of a designated sole source aquifer?	no
Within 3000 feet of a historic property on the National Register of Historic Places?	yes
Within 3000 feet of a Toxic Substances Control Act (TSCA) site?	no
Within 3000 feet of a Land Cession Boundary?	no
Within 3000 feet of a tribal area (lower 48 states)?	no
Within 3000 feet of the service area of a mitigation or conservation bank?	no
Within 3000 feet of the service area of an In-Lieu-Fee Program?	no
Within 3000 feet of a Public Property Boundary of the Formerly Used Defense Sites?	no
Within 3000 feet of a Munitions Response Site?	no
Within 3000 feet of an Essential Fish Habitat (EFH)?	yes
Within 3000 feet of a Habitat Area of Particular Concern (HAPC)?	no
Within 3000 feet of an EFH Area Protected from Fishing (EFHA)?	yes
Within 3000 feet of a Bureau of Land Management Area of Critical Environmental Concern?	no
Within 3000 feet of an ESA-designated Critical Habitat Area per U.S. Fish & Wildlife Service?	no
Within 3000 feet of an ESA-designated Critical Habitat river, stream or water feature per U.S. Fish & Wildlife Service?	no

Created on: 8/29/2023 11:12:31 PM

ENVIRONMENTAL PROTECTION AGENCY, EPA

40 CFR Part 52

[EPA-R02-OAR-2016-0559; FRL-9964-87-Region 2]

Approval of Air Quality Implementation Plans; Puerto Rico; Attainment Demonstration for the Arecibo Area for the 2008 Lead National Ambient Air Quality Standards

This document is scheduled to be published in the
Federal Register on 07/14/2017 and available online at
https://federalregister.gov/d/2017-14730, and on **FDsys.gov**

6560-50-P

ENVIRONMENTAL PROTECTION AGENCY

40 CFR Part 52

[EPA-R02-OAR-2016-0559; FRL-9964-87-Region 2]

Approval of Air Quality Implementation Plans; Puerto Rico; Attainment Demonstration for the Arecibo Area for the 2008 Lead National Ambient Air Quality Standards

AGENCY: Environmental Protection Agency.

ACTION: Final rule.

SUMMARY: The Environmental Protection Agency is approving a State Implementation Plan (SIP) revision dated August 30, 2016, submitted by the Commonwealth of Puerto Rico to the EPA. The purpose of this SIP revision is to provide for attainment of the 2008 Lead National Ambient Air Quality Standard in the Arecibo Lead Nonattainment Area. The Arecibo Nonattainment Area is comprised of a portion of Arecibo Municipality in Puerto Rico with a 4 kilometer radius surrounding The Battery Recycling Company, Inc. This SIP revision includes a base year emissions inventory, a modeling demonstration showing attainment of the Lead National Ambient Air Quality Standard, contingency measures and a narrative on control measures that includes reasonably available control measures/reasonably available control technology, and reasonable further progress.

DATES: This rule is effective on **[insert date 30 days after date of publication in the Federal Register]**. The incorporation by reference of certain publications listed in the regulations is

approved by the Director of the Federal Register as of **[insert date 30 days after date of publication in the Federal Register].**

ADDRESSES: EPA has established a docket for this action under Docket ID No**.** EPA-R02-OAR-2016-0559. All documents in the docket are listed on the www.regulations.gov web site. Although listed in the index, some information is not publicly available, e.g., CBI or other information whose disclosure is restricted by statute. Certain other material, such as copyrighted material, is not placed on the Internet and will be publicly available only in hard copy form. Publicly available docket materials are available electronically through www.regulations.gov.

FOR FURTHER INFORMATION CONTACT: Mazeeda Khan, Air Programs Branch, Environmental Protection Agency, 290 Broadway, New York, New York 10007-1866, (212) 637-3715, or by email at khan.mazeeda@epa.gov.

SUPPLEMENTARY INFORMATION:

The Supplementary Information section is arranged as follows:

Table of Contents:

I. What is the Background Information?

II. What Comments Did The EPA Receive On The Proposal And What Are The EPA's Responses?

III. What Action is EPA Taking?

IV. Statutory and Executive Order Reviews

I. What is the Background Information?

On November 12, 2008 (73 FR 66964), the Environmental Protection Agency (EPA) revised the Lead National Ambient Air Quality Standard (NAAQS), lowering the level from 1.5 micrograms per cubic meter ($\mu g/m^3$) to 0.15 $\mu g/m^3$ calculated over a three-month rolling average. The EPA established the 2008 Lead NAAQS based on significant evidence and numerous health studies demonstrating that serious health effects are associated with exposures to lead emissions.

Following promulgation of a new or revised NAAQS, the EPA is required by the Clean Air Act (CAA) to designate areas throughout the United States as attaining or not attaining the NAAQS; this designation process is described in CAA section 107(d)(1). On November 22, 2010 (75 FR 71033), the EPA promulgated initial air quality designations for the 2008 Lead NAAQS (first round of designations), which became effective on December 31, 2010, based on air quality monitoring data for calendar years 2007 – 2009, where there was sufficient data to support a nonattainment designation. On November 22, 2011 (76 FR 72097), the EPA promulgated its second round of designations for the 2008 Lead NAAQS, which became effective on December 31, 2011, based on air quality monitoring data for calendar years 2008 – 2010. The Arecibo Area was designated as nonattainment for the 2008 Lead NAAQS in the second round of designations, based on air quality monitoring data that exceeded the 2008 Lead NAAQS. This designation triggered a requirement for Puerto Rico to submit a State Implementation Plan (SIP) revision by June 30, 2013, with a plan for how the Area would attain the 2008 Lead NAAQS, as

expeditiously as practicable, but no later than December 31, 2016. *See* 42 U.S.C. 7514(a), 7514a(a).

The Puerto Rico Environmental Quality Board (PREQB) initially submitted a lead SIP revision for the Arecibo Area on January 30, 2015. The EPA proposed to disapprove the January 30, 2015 submittal on February 29, 2016 (81 FR 10159). One comment was received from the Chairman of the PREQB, Weldin Ortiz Franco. The PREQB rescinded the January 30, 2015 submittal and replaced it with the August 30, 2016 lead SIP submittal for the Arecibo Area. The August 30, 2016 SIP submittal included the base year emissions inventory and the attainment demonstration. The EPA proposed to approve this submittal on November 7, 2016. (81 FR 78097). The EPA's analysis of the submitted attainment plan includes a review of the pollutant addressed, emissions inventory requirements, modeling demonstration of lead attainment, contingency measures and narrative on control measures that includes reasonably available control measures (RACM)/reasonably available control technology (RACT), and reasonable further progress (RFP) for the Arecibo Area. Today's rule represents the EPA's final action on Puerto Rico lead SIP attainment plan.

II. What Comments Did The EPA Receive On The Proposal And What Are The EPA's Responses?

The public comment period for the November 7, 2016 proposed approval of the PREQB lead SIP revision closed on December 7, 2016. We received comments from Mr. Jesus Garcia Oyola and

Mr. Wilfredo Velez Hernandez, Earthjustice, and Madres De Negro De Arecibo, Inc. In general, all three commenters stated that the EPA should disapprove Puerto Rico's proposed August 30, 2016 SIP revision.

A summary of the comments and the EPA's responses are provided below. Comments from Jesus Garcia Oyola and Wilfredo Velez Hernandez are referred to as "Garcia/Velez", comments from Earthjustice are referred to as "Earthjustice" and comments from Madres De Negro De Arecibo, Inc. are referred to as "Madres De Negro." These responses address "significant comments, criticisms, and new data" submitted during the comment period, pursuant to CAA section 307(d)(6)(B), 42 U.S.C. 7607(d)(6)(B). The EPA is not addressing those comments that do not relate to the underlying purpose of the November 17, 2016 proposed SIP approval of the attainment demonstration for the Arecibo Area, such as comments related to the Clean Water Act and Resource Conservation and Recovery Act.

1. *Comment*: In general, there were several comments that the Spanish and English versions of the lead SIP revision available for public comment by the PREQB were not identical (such as sections addressing the emissions inventory), and that the documents were too technical.

EPA Response: The EPA has reviewed, evaluated, and proposed action on the August 30, 2016 lead SIP revision submitted by PREQB to the EPA. The August 30, 2016 SIP submittal (lead SIP submittal or lead SIP revision), which is in English, is the official submittal. The PREQB followed the process set forth in CAA sections 110 and 172 and 40 CFR part 51, appendix V in

preparing and submitting the lead SIP revision. Consistent with the relevant requirements, the official August 30, 2016 SIP submittal included the sources within the boundaries of the lead modeling domain (sources in Arecibo and its bordering municipalities, see pages 34-36 and pages 62-64 of the SIP submittal). Emissions from sources outside of the modeling domain were not included in the attainment demonstration modeling because their effect, if any, on the area within the lead modeling domain would be negligible. *See* Responses to Comments #4 and #5.

2. *Comment:* Garcia/Velez stated that the 2011 emissions inventory contains allowable emissions of lead but should contain actual emissions of lead, in accordance with 42 U.S.C. 7502(c)(3) which requires "a comprehensive, accurate, current inventory of actual emissions from all sources of the relevant pollutant."

EPA Response: The lead SIP submittal provided the 2011 actual emissions and, for those sources where actual emissions could not be calculated due to lack of activity data, provided allowable emissions. The PREQB's use of allowable emissions for the 2011 calendar year, instead of actual emissions, is a more conservative approach which may result in the plan requiring additional controls to reach attainment in the future. As stated in Table 8.1 in 40 CFR part 51, appendix W (Guideline on Air Quality Models), this methodology is acceptable in attainment demonstrations instead of including a zero value due to lack of actual activity data.

3. *Comment:* Garcia/Velez stated that in 2011, Energy Answers and Sunbeam Synergy were not in operation, however, Energy Answers was included in the 2011 emissions inventory and

Sunbeam Synergy was not.

EPA Response: The commenter is correct that on pages 18-19 of the lead SIP revision, the text stated that 2011 facility emissions for Energy Answers are included in the 2011 emissions inventory. However, although Energy Answers 2011 emissions are mentioned in the text on pages 18-19, the actual 2011 facility emissions numbers that are included in the air quality attainment demonstration do not include emissions from Energy Answers as it was not operating at that time. In fact, the facility has not been constructed yet. *See* the PREQB lead SIP submittal, page 32, Table A1, for 2011 emissions inventory numbers. The sources included in the air quality attainment demonstration were listed in the PREQB's 2011 emissions inventory at page 33, Table A1 of the submittal. These sources were included in Table 1 of the EPA's notice of proposed rulemaking, 81 FR at 78100. Although they are not included in the 2011 emissions inventory, as discussed in response #11 below, Energy Answers and Sunbeam Synergy are included in the 2016 projection inventory totals. *See* PREQB lead SIP submittal, page 57, Table B1.

4. *Comment:* Earthjustice stated that the EPA regulations mandate that "emissions inventories such as this one use the '[m]aximum allowable emission limit or federally enforceable permit limit' to model concentrations. But the AEROMOD Model in the lead SIP revision uses inputs that are lower than permit limits or maximum allowable emissions" for PREPA and Safetech facilities. Accordingly, Earthjustice stated that the PREQB must redo its model using maximum

allowable emissions as required by the EPA regulations.

EPA Response: According to the EPA 2008 Lead NAAQS Implementation Questions and Answers Memorandum document dated July 8, 2011 (see page 7, answer to question 12), the emission rate input for attainment demonstrations should be based on maximum allowable or federally enforceable permit limits. The commenter is correct that the PREQB did not use the permit limits for PREPA and Safetech, which are 0.3 and 0.013 tons per year (tpy), respectively. However, in this particular instance, it is reasonable not to require the PREQB to remodel 2016 lead concentrations using maximum allowable emissions because doing so would not change the conclusion that the SIP submittal demonstrates attainment of the 2008 Lead NAAQS. The PREQB used 2016 emissions values for PREPA and Safetech of 0.28 and 0.009 tpy, respectively, resulting in a combined lead contribution for these two sources equal to 0.0178 percent of total cumulative lead contribution of 0.09352 $\mu g/m^3$. Furthermore, the modeled 3-month rolling average cumulative lead concentration from all sources, 0.09352 $\mu g/m^3$, is substantially below the 2008 Lead NAAQS of 0.15 $\mu g/m^3$. Given the minimal contribution of these two sources to the overall lead contribution for this area, if the emissions for these two sources were increased to the permit levels of 0.3 tpy and 0.013 tpy, respectively, the increase would not impact the attainment demonstration of the 2008 Lead NAAQS. Consequently, the PREQB actions were within reason.

5. *Comment*: Madres de Negro and Earthjustice commented on the substance and approval status of permitted facilities in Arecibo and other municipalities. Specifically, commenters stated

that the 2016 projected emissions inventory in the lead SIP revision does not match the permits inventory for the PREPA and Safetech facilities. Commenters suggested that these inconsistencies in information require the EPA to disapprove the lead SIP revision.

EPA Response: *See* the Responses to Comments #3 and #4. These enforceable limits were established pursuant to the Regulation for the Control of the Atmospheric Pollution (RCAP) Rules 203 (Permit to Construct a Source rule) and 204 (Permit to Operate a Source rule). RCAP Rules 203 and 204 require air emissions sources to obtain permits prior to the construction or operation of the source and also require the source to demonstrate compliance with all applicable rules and regulations prior to obtaining a construction permit. The EPA agrees that, for PREPA and Safetech, the emissions inventory in the lead SIP revision is slightly different from that in the permits included as Exhibits 3 and 4 to Earthjustice letter. The 2011 emissions inventory included the The Battery Recycling Company, Inc. (TBRCI) facility and the facilities in surrounding municipalities listed in the EPA's Emissions Inventory System (EIS)/National Emissions Inventory (NEI) database. TBRCI, a secondary lead smelter representing 85 percent of the 2011 emissions inventory, was the primary source of the high lead concentration, and the nonattainment area was established with this facility at its center. The other facilities contributed to lead concentrations representing a total of 13 percent of the 2011 emission inventory. As explained in the Responses to Comments #3 and #4, emissions from these sources contribute minimally to the cumulative lead concentration in the nonattainment area in the 2016 modeling, and slight differences between permitted and modeled emissions are unlikely to impact the attainment demonstration contained in the PREQB's SIP revision.

6. *Comment*: Several comments were made that the emissions included in the lead SIP revision were not inclusive of all TBRCI operations (including lead emissions to water and hazardous waste) and did not include all emissions of lead in the areas as far away as Camuy and Manati municipalities, including the airports.

EPA Response: The EPA disagrees that the emissions to water and hazardous waste as well as emissions from non-bordering municipalities should be included. PREQB's SIP emissions inventory included air lead emission sources consistent with the EPA guidance 2008 Lead NAAQS Implementation Questions and Answers.[1] Consistent with the Lead Guidance, any ambient air lead emissions recorded in the EPA EIS/NEI database for Arecibo and its bordering municipalities were included in this lead SIP revision. Emissions from Antonio Nery Juarbe Airport, which is located within the Arecibo Area, were also included. For additional facility emissions calculated and included in the inventory, *see* Responses to Comments #1 - #4.

7. *Comment*: Madres de Negro states that the PREQB announced its intention to issue Energy Answers a construction permit in October 2014, and that authorizing construction of a new lead-emitting facility in a nonattainment area without a SIP violates 40 CFR 52.24.

EPA Response: The EPA disagrees that the timing of Energy Answers construction permit is

[1] Memorandum from Scott L. Mathias, Interim Director, Air Quality Policy Division, to Regional Air Division Directors Regions I-X, dated July 8, 2011 (Lead Guidance).

relevant to the current rulemaking, which constitutes the EPA's action on the PREQB's attainment demonstration for the Arecibo lead nonattainment area. The PREQB has an approved nonattainment new source review program (NNSR) that includes lead and that meets the statutory requirements. Proposed facilities must, at the time of permit application, meet the requirements of the PREQB RCAP 203, the PREQB's NNSR program and any applicable federal requirements. As stated above, however, the permitting of new sources under this program is independent of considerations relevant to determining whether the PREQB has submitted an approvable attainment plan. Regardless, the 2016 modeling included in the Arecibo attainment demonstration shows that the new planned sources, including the Energy Answers facility, will not cause or contribute to lead concentrations in excess of the 2008 Lead NAAQS.

8. *Comment*: Earthjustice stated that the lead SIP revision does not include emissions limitations for any facility within or near the nonattainment area but rather sets forth general provisions of the PREQB regulations. Specifically, the commenter asserts that "[t]hese vague prohibitions on general pollution" do not comply with the CAA's requirement of particularized emission limits and control technologies applied to the emitting facilities within the nonattainment area.

EPA Response: The EPA disagrees that the attainment SIP does not provide for the statutorily required permanent and enforceable emissions limitations as may be necessary to provide for attainment. The lead SIP revision is a plan to control ambient air lead emissions from the primary sources (or, in this case, source) of emissions. The PREQB's attainment modeling took into account all ambient air lead emissions recorded in the EPA EIS/NEI database in Arecibo

and its bordering municipalities, in addition to emissions from the primary source. The modeling also conservatively incorporated other planned facilities that emit lead to ensure that the area will attain the standard. The PREQB's modeling demonstration determined that TBRCI was the primary source of ambient air lead emissions contributing to nonattainment in the Arecibo Area and was thereby, the only source required to implement control technologies. On August 19, 2015, the PREQB rescinded the TBRCI operating and construction permits. Because TBRCI is no longer permitted to emit lead at the ambient air levels that contributed to nonattainment (or indeed at any level whatsoever), the permit recision provides the permanent and enforceable emission reductions necessary to bring the Arecibo Area into attainment with the 2008 Lead NAAQS. As stated in both the lead SIP revision submitted by the PREQB and the EPA's proposed approval, should TBRCI or any other entity decide to start up business as a secondary lead smelter facility in the Arecibo Area, the company will need to obtain the appropriate permits to operate in accordance with all applicable laws and regulations of the Commonwealth of Puerto Rico and the EPA, including the Commonwealth of Puerto Rico RCAP, the Puerto Rico Environmental Public Policy Act, Act 416-2004 as amended (PREPPA Act 416) and CAA Section 112 requirements. These relevant laws and programs are intended, among other things, to ensure that emissions from new sources do not interfere with the attainment of the 2008 Lead NAAQS.

The EPA and the PREQB also considered fugitive emissions from the piles of lead slag and other materials stored on the facility property. It is noteworthy that the TBRCI site has been proposed

for the Superfund National Priorities List[2] and that the EPA has been conducting activities on TBRCI property since September 2015. Additionally, RCAP Rule 404, which requires any person to take reasonable precautions to prevent fugitive emissions from becoming airborne has already been adopted, is approved into the Puerto Rico's SIP[3]. The requirements of RCAP Rule 404 are, therefore, enforceable measures for controlling fugitive emissions from the TBRCI site.

9. *Comment*: Earthjustice stated that the Energy Answers and PREPA Cambalache Plant are the highest 2016 emitters and should be the subject of more stringent emissons limitations and control measures in the Arecibo SIP Revision.

EPA Response: The EPA disagrees. *See* Response to Comment #8. The PREQB's modeling indicates that the shutdown of TBRCI, coupled with the backstop of the fugitive emissions provisions in RCAP Rule 404, are sufficient for the Arecibo Area to achieve attainment of the 2008 Lead NAAQS.

10. *Comment*: Garcia/Velez stated that the PREQB should not have included facilities that are not operational in the 2016 projected emission inventory.

EPA Response: A projected emissions inventory is the basis for determining whether the area

[2] National Priorities List Proposed Site, The Battery Recycling Company, https://semspub.epa.gov/work/02/363680.pdf, 81 FR 62428 (September 9, 2016).

[3] 62 FR 3213 (January 22, 1997), 40 CFR 52.2723.

will attain and maintain the lead standard based on permitted allowances. As discussed in Response to Comment #3, the proposed sources Energy Answers and Sunbeam were added to the projected emissions inventory for 2016. This is a conservative approach for modeling the air quality in the Arecibo Area. By including the Energy Answers and Sunbeam Synergy facilities as part of the 2016 projected inventory for the attainment demonstration, the PREQB's lead SIP revision is demonstrating that future growth in lead emissions from these sources will not cause or contribute to a violation of the 2008 Lead NAAQS. The Arecibo ambient air lead attainment demonstration SIP is not required to address specific proposed facilities. Rather, consistent with RCAP Rule 203, pre-construction requirements, those proposed facilities are required to conduct a demonstration of compliance with all applicable rules and regulations at the time of permit application. In addition, proposed facilities will be required to comply with PREQB's approved NNSR program. The Arecibo attainment demonstration model demonstrates that the planned facilities will not cause an exceedance in the 2008 Lead NAAQS.

11. *Comment*: Several commenters questioned whether, if TBRCI is the cause of the ambient air lead problem in the area and its 2016 potential emissions of lead are 0.33538 tpy, then Energy Answers with slightly higher emissions may also be a problem.

EPA response: The 2016 projected emissions inventory for TBRCI in the January 30, 2015 lead SIP submittal was 0.33538 tpy. This number represented stack emissions from TBRCI. However, now that TBRCI's permits have been pulled and the facility has shut down, stack emissions from this facility are zero, as reflected in the more recent August 30, 2016 SIP revision. The lead SIP

attainment demonstration in the 2015 submission assumed continued operation at TBRCI which includes fugitive emissions and materials handling and transport from TBRCI. When TBRCI was modeled in the previous submission, the modeling indicated that these low elevation fugitive emissions and materials handling and transport were the major contributor to overall emissions because they are subject to less dispersion, even exceeding the magnitude of the stack emissions. As modeled in the 2015 submission, TBRCI's cumulative emissions resulted in the Arecibo Area exceeding the 2008 Lead NAAQS of 0.15 $\mu g/m^3$. However, with the cessation of operations at TBRCI, the PREQB's updated modeling shows the area coming into attainment.

Regardless, while the emissions inventory number associated with the Energy Answers proposed incinerator may be similar to TBRCI's combined stack and fugitive/materials handling and transport emissions, the model in the Puerto Rico's SIP shows that the proposed incinerator's maximum air quality impact for lead is close to Energy Answer's fence-line and results in a lead concentration for the Arecibo Area that is 200 times less than the level of the 2008 Lead NAAQS. The model also shows that the proposed incinerator's impact in the Arecibo Area is 3000 times less than the 2008 Lead NAAQS and would have a negligible contribution to the lead emissions in the area. This information is included in Energy Answer's PSD permit application as well as EPA's Response to Comment document regarding its permit.

12. *Comment*: Earthjustice stated that even with TBRCI shutdown, the PREQB estimates that the other lead-emitting facilities in the area, collectively, will emit 0.78 tons of lead, a significant amount that is still about 65 percent of the 1.21 tons of lead that TBRCI emitted in 2011, leading

to nonattainment.

EPA Response: The EPA disagrees that emissions from other lead-emitting facilities will result in nonattainment in the Arecibo Area. The attainment demonstration is not simply based on a summing of air lead emission values from all sources in the area, as presented by the commenter. Rather, the EPA's Lead Guidance requires that an attainment demonstration include an emissions inventory, ambient air monitoring data, and the EPA-approved air quality modeling dispersion analysis, which also takes into consideration atmospheric conditions, dispersion, chemical transformation in the area under analysis, emissions, background concentration, stack heights and stack down wash and building wake. The modeled attainment demonstration accounted for the collective ambient air lead emissions from sources in Arecibo and in bordering municipalities, including the emissions cited by the commenter, and shows that those emissions will not result in lead levels above the 2008 Lead NAAQS in the nonattainment area. *See* PREQB SIP Plan Appendix C.

13. *Comment*: Earthjustice stated that the EPA cannot approve a SIP revision when the air monitoring data does not demonstrate that attainment can be achieved until the end of 2018.

EPA Response: The EPA disagrees with this comment. As stated in the Lead Guidance, "[a]n attainment SIP may be approvable even if the state does not anticipate having 3 full years of clean data by the attainment date. *See EDF v. EPA*, 369 F.3d 193 (2d Cir. 2004); *Sierra Club v. EPA*, 356 F3d 296 (D.C. Cir. 2004) amended 2004 WL 877850 (D.C. Cir. 2004)." Lead Guidance, page 4, Question 9. The ambient air monitoring data show clean data starting in

September 2015, following the withdrawal of TBRCI permits on August 19, 2015; the closure of TBRCI will facilitate the attainment of the 2008 lead NAAQS by 2018. The fact that the area is unable to attain until 2018 does not abrogate either the PREQB's statutory obligation to submit a SIP demonstrating how it will reach attainment of the NAAQS as expeditiously as possible, or the EPA's responsibility to act on such a SIP submission. The EPA's approval of the attainment plan is based on the finding that the area meets all applicable lead NAAQS attainment plan requirements under CAA sections 172, 191, and 192, 42 U.S.C. 7502, 7514, and 7514a.

14. *Comment*: Earthjustice commented that one of the two lead air monitoring sites referenced in the SIP, Victor Santoni Cordero site, was not operational from October 3, 2015, to May 6, 2016, and that at the other lead air monitoring site, Road #2, there are data gaps between December 13, 2014, and January 12, 2015, and between July 5, 2015, and September 3, 2015. Earthjustice asserted that the EPA should ensure that both air monitoring sites are fully operational before approving the Arecibo Lead SIP Revision. Earthjustice stated that the PREQB has never published the air monitoring data relative to ambient air lead in Arecibo.

EPA Response: The EPA disagrees with Earthjustice's characterization of the PREQB's air monitoring network in the Arecibo Area. In accordance with 40 CFR part 58, appendix D section 4.5, the state is required to have at a minimum one source-oriented air monitoring site located to measure the maximum lead concentration in ambient air resulting from each non-airport lead source which emits 0.50 or more tpy. In Arecibo, the PREQB operates two monitoring sites, which is more than the required number. The data from both of the monitors is used to determine compliance with the NAAQS. Any 3-month period can show a violation of the standard, while a 36-month period can show attainment of the standard. While it is optimal to

collect all the data points, mechanical issues may occur, thereby making sampling difficult. If an issue arises, the PREQB and the EPA work as expeditiously as possible to address it. Even though the Victor Santoni Cordero site was not operational from October 3, 2015, to May 6, 2016, the closer monitoring site, Road #2 was operational at that time. Similarly, the PREQB advised the EPA that, due to a mechanical issue, samples were not collected from July 11, 2015 to August 28, 2015 (nine samples) at the Road #2 site. However, the Victor Cordero site continued to operate during that time with sampling data ranging from 0.002 $\mu g/m^3$ to 0.005 $\mu g/m^3$. Consistent with 40 CFR part 58, appendix D section 4.5, one air monitoring site was operational. This data gap may affect the timeframe (three years of monitored clean data) by which the area can show attainment of the standard; however, it does not affect the SIP process of approving a plan to attain the standard.

The data is published in AQS as required by 40 CFR part 58. The public can access this data by visiting www.epa.gov/airdata.

15. *Comment*: Earthjustice stated that the proposed SIP action overlooks air quality monitoring data that clearly show continued exceedances of the lead NAAQS (0.15 $\mu g/ m^3$) even after the temporary shutdown of TBRCI and, therefore, the cessation of operations at TBRCI cannot serve as a basis for demonstrating attainment.

EPA Response: When TBRCI ceased lead smelter operations on June 2, 2014, the handling of

the slag piles continued, causing the exceedances of the 2008 Lead NAAQS until July 2015. The air quality data measured after the PREQB rescinded TBRCI's permits (August 19, 2015) demonstrates that pulling the source's operating permit and terminating handling of slag piles, as opposed to just ceasing stack emissions, is an appropriate control measure that has a positive effect on the air quality. These slag piles, which generate the fugitive emissions, are part of a Superfund removal action. As identified in EPA's proposed approval, the existing SIP provision, Puerto Rico RCAP Rule 404, is in place as a control measure for fugitive emissions. RCAP Rule 404(E) provides that "[a]ny new or modified source, the construction of which causes or may cause fugitive emissions, shall apply for a permit as required in Rule 203." All other control measures were discussed in the proposed approval. Also *see* Response to Comment #18.

Date	Activity	Air Monitoring Data
June 2010	NAAQS exceeded	0.201 µg/m^3 3 month rolling avg
June 2014	TBRCI ceased operations	0.423 µg/m^3 3 month rolling avg
July 2015	Last time NAAQS was exceeded	0.184 µg/m^3 3 month rolling avg
September 2015	Individual sample dated September 3, 2015 showed a decrease; PREQB pulled TBRCI permits prior to this sample collection. EPA Superfund personnel on TBRCI property in September 2015.	0.004 µg/m^3 individual sample
November 2015	Values below NAAQS	0.022 µg/m^3 3 month rolling avg

May 2016	Values below NAAQS	0.021 µg/m^3 3 month rolling avg

16. *Comment*: Earthjustice stated that the contingency measures included in the lead SIP revision of increased monitoring, investigation, removal orders, air pollution alerts, etc., require 'further action by the State' and therefore do not satisfy the CAA.

EPA Response: As Earthjustice indicates, CAA section 172(c)(9) provides that "contingency measures [are] to take effect in any such case without further action by the State or the Administrator." In *Greenbaum v. EPA*, 370 F.3d 527 (6th Cir. 2004), in upholding a redesignation determination by the EPA, the court agreed with the EPA's interpretation that "without further action" means without further rulemaking by the State or the EPA. The court stated, citing to the EPA's Calcagni memo [4], "With respect to triggers, the EPA correctly argues that monitored violations of the NAAQS can be possible triggers. Calcagni Memo at 12. The contingency measures may be triggered upon notification by the Ohio EPA or the United States EPA of a determination by either agency that a violation has occurred. With respect to schedules, the EPA correctly explains that the contingency measures were initially developed pursuant to [CAA] § 172(c)(9), which requires that the measures take effect without further action by the State or the EPA, which the EPA interprets to mean 'that no further rulemaking activities by the State or the EPA would be needed to implement the contingency measures.' State

[4] The "Calcagni Memorandum," referenced above, is a memorandum dated September 4, 1992, to EPA Regional Air Directors from John Calcagni, Director, EPA Air Quality Management Division, titled "Procedures for Processing Requests to Redesignate Areas to Attainment." The Calcagni Memorandum is available at https://www.epa.gov/sites/production/files/2016-03/documents/calcagni_memo_-_procedures_for_processing_requests_to_redesignate_areas_to_attainment_090492.pdf

Implementation Plans; General Preamble for the Implementation of Title I of the Clean Air Act Amendments of 1990, 57 Fed. Reg. 13,498, 13,512 (April 16, 1992). The Calcagni Memorandum also states that 'for the purposes of Section 175A, a State is not required to have fully adopted contingency measures that will take effect without further action by the State in order for the maintenance plan to be approved.' Calcagni Memorandum at 12. Thus, no pre-determined schedule for adoption of the measures is necessary in each specific case." *Greenbaum*, 370 F.3d at 541.

The contingency measures in Puerto Rico's attainment plan can take effect without further rulemaking activities; thus, the EPA disagrees that the contingency measures included in the SIP revision do not satisfy the CAA.

17. *Comment*: Earthjustice stated that monitoring, by itself, does not satisfy the CAA's requirements for a control measure, and therefore cannot be a contingency measure.

EPA Response: The EPA disagrees that the PREQB intends for monitoring, by itself, to serve as a contingency measure. Monitoring is used as a trigger to activate contingency measures, not as a control measure and potential contingency measure itself. The substantive contingency measures the EPA is approving can be found in the PREQB SIP submittal at pages 24-27.

18. *Comment:* Earthjustice reviewed the EPA Air Quality Data and noted that exceedances of the lead NAAQS have been measured in Arecibo at least 26 times after the TBRCI shutdown, as recent as May 2016.

EPA Response: The data points Earthjustice referenced are not exceedances of the NAAQS. Compliance with the 2008 Lead NAAQS is assessed by averaging data points over a three month period, not on the basis of individual values. While the individual data points may be greater than 0.15 $\mu g/m^3$, this does not mean there has been a violation of the NAAQS; once the relevant values averaged over three months, the data is still below the 2008 Lead NAAQS.

III. What Action is EPA Taking?

The EPA is approving into the SIP Puerto Rico's lead attainment plan for the Arecibo Area. Specifically, the EPA is taking final action to approve Puerto Rico's August 30, 2016 submittal, which includes the attainment demonstration, base year emissions inventory, modeling, and contingency measures, and addresses RACM/RACT and the RFP plan.[5] Permits for the lead smelter, TBRCI, which was documented as the source of high lead emissions contributing to nonattainment of the NAAQS, have been withdrawn and TBRCI is no longer operating. The requirements for RACM/RACT and the RFP plan are satisfied because the Commonwealth of Puerto Rico demonstrated that the Area will attain the 2008 Lead NAAQS as expeditiously as practicable, and could not implement any additional measures to attain the NAAQS any sooner.

[5] *See* EPA's proposed approval of the Attainment Demonstration for the Arecibo Lead Nonattainment Area 81 FR 78097 (November 7, 2016).

The EPA notes that since September 2015, the month after the PREQB withdrew the construction and operating permits for TBRCI, the data from the source oriented Arecibo air monitoring site indicates the lead concentration in the ambient air has been below the three-month rolling average for the 2008 Lead NAAQS and the 2016 modeling indicates the area will attain the NAAQS. The SIP for the Arecibo Area adequately demonstrates a trajectory towards attainment; thus, the EPA is approving the attainment demonstration, emissions inventory, modeling, control measures, RACM/RACT and RFP.

The EPA's review of the materials submitted indicates that Puerto Rico has developed the Lead attainment plan in accordance with the requirements of the CAA, 40 CFR part 51, and the EPA's technical requirements for a Lead SIP. Therefore, the EPA is approving into the SIP the Lead attainment plan for Arecibo, Puerto Rico.

A detailed analysis of the EPA's review and rationale for approving the lead SIP submittal as addressing these CAA requirements may be found in the November 7, 2016 proposed rulemaking action (81 FR78097) which is available on line at www.regulations.gov, Docket ID Number EPA-R02-OAR-2016-0560.

IV. Statutory and Executive Order Reviews

Under the CAA, the Administrator is required to approve a SIP submission that complies with the provisions of the Act and applicable Federal regulations. 42 U.S.C. 7410(k); 40 CFR 52.02(a). Thus, in reviewing SIP submissions, the EPA's role is to approve state choices,

provided that they meet the criteria of the CAA. Accordingly, this action merely approves state law as meeting Federal requirements and does not impose additional requirements beyond those imposed by state law. For that reason, this action:

- Is not a "significant regulatory action" subject to review by the Office of Management and Budget under Executive Order 12866 (58 FR 51735, October 4, 1993);
- Does not impose an information collection burden under the provisions of the Paperwork Reduction Act (44 U.S.C. 3501 *et seq.*);
- Is certified as not having a significant economic impact on a substantial number of small entities under the Regulatory Flexibility Act (5 U.S.C. 601 *et seq*.);
- Does not contain any unfunded mandate or significantly or uniquely affect small governments, as described in the Unfunded Mandates Reform Act of 1995 (Public Law 104-4);
- Does not have Federalism implications as specified in Executive Order 13132 (64 FR 43255, August 10, 1999);
- Is not an economically significant regulatory action based on health or safety risks subject to Executive Order 13045 (62 FR 19885, April 23, 1997);
- Is not a significant regulatory action subject to Executive Order 13211 (66 FR 28355, May 22, 2001);
- Is not subject to requirements of section 12(d) of the National Technology Transfer and Advancement Act of 1995 (15 U.S.C. 272 note) because application of those requirements would be inconsistent with the CAA; and,

- Does not provide EPA with the discretionary authority to address, as appropriate, disproportionate human health or environmental effects, using practicable and legally permissible methods, under Executive Order 12898 (59 FR 7629, February 16, 1994).

In addition, this rule does not have tribal implications as specified by Executive Order 13175 (65 FR 67249, November 9, 2000), because the SIP is not approved to apply in Indian country located in the state, and the EPA notes that it will not impose substantial direct costs on tribal governments or preempt tribal law.

The Congressional Review Act, 5 U.S.C. 801 *et seq*., as added by the Small Business Regulatory Enforcement Fairness Act of 1996, generally provides that before a rule may take effect, the agency promulgating the rule must submit a rule report, which includes a copy of the rule, to each House of the Congress and to the Comptroller General of the United States. The EPA will submit a report containing this action and other required information to the U.S. Senate, the U.S. House of Representatives, and the Comptroller General of the United States prior to publication of the rule in the Federal Register. A major rule cannot take effect until 60 days after it is published in the Federal Register. This action is not a "major rule" as defined by 5 U.S.C. 804(2).

Under section 307(b)(1) of the CAA, petitions for judicial review of this action must be filed in the United States Court of Appeals for the appropriate circuit by **[insert date 60 days after date of publication in the Federal Register]**. Filing a petition for reconsideration by the Administrator of this final rule does not affect the finality of this action for the purposes of

judicial review nor does it extend the time within which a petition for judicial review may be filed, and shall not postpone the effectiveness of such rule or action. This action may not be challenged later in proceedings to enforce its requirements. (See section 307(b)(2)).

List of Subjects in 40 CFR Part 52

Environmental protection, Air pollution control, Incorporation by reference, Intergovernmental Relations, Lead, Nitrogen dioxide, Ozone, Particulate matter, Reporting and recordkeeping requirements, Sulfur oxides, Volatile organic compounds.

Authority: 42 U.S.C. 7401 et seq.

Dated: June 20, 2017. Catherine R. McCabe,

Acting Regional Administrator,

Region 2.

For the reasons set forth in the preamble, the Environmental Protection Agency amends part 52 of chapter I, title 40 of the Code of Federal Regulations as follows:

PART 52—APPROVAL AND PROMULGATION OF IMPLEMENTATION PLANS

1. The authority citation for part 52 continues to read as follows:

Authority: 42 U.S.C. 7401 et seq.

Subpart BBB–Puerto Rico

2. Section 52.2720 is amended by adding paragraph (c)(40) to read as follows:

§52.2720 Identification of plan

*** * * * ***

(c) *** * ***

(40) Revisions to the State Implementation Plan submitted by the Puerto Rico Environmental Quality Board (EQB) on August 30, 2016 for the 2008 lead NAAQS.

(i) [Reserved]

(ii) Additional information-EPA approves Puerto Rico's Attainment Demonstration for the Arecibo Lead Nonattainment Area including the base year emissions inventory, modeling demonstration of lead attainment, contingency measures, reasonably available control measures /reasonably available control technology, and reasonable further progress.

3. Add §52.2727 to read as follows:

§52.2727 Control strategy and regulations: Lead.

EPA approves revisions to the Puerto Rico State Implementation Plan submitted on August 30, 2016, consisting of the base year emissions inventory, modeling demonstration of lead attainment, contingency measures, reasonably available control measures /reasonably

available control technology, and reasonable further progress for the Arecibo Lead Nonattainment Area. These revisions contain control measures that will bring Puerto Rico into attainment for the Lead NAAQS by the end of 2018.

[FR Doc. 2017-14730 Filed: 7/13/2017 8:45 am; Publication Date: 7/14/2017]

Appendix J:
Endangered Species

Transmittal Letter

Based on the information provided, we determined the project proposed qualifies for the blanket clearance letter. Nevertheless, if the project is modified this office should be contacted concerning the need for the initiation of consultation under section 7 of Endangered Species Act of 1973.

Reviewer DAMARIS ROMAN RUIZ Digitally signed by DAMARIS ROMAN RUIZ Date: 2024.12.03 10:35:30 -04'00'

LOURDES MENA Digitally signed by LOURDES MENA Date: 2024.12.04 07:12:27 -04'00'

Caribbean ES Field Supervisor

December 2, 2024

Caribbean Ecological Services Field Office
U.S. Fish and Wildlife Service
P.O. Box 491
Boquerón, Puerto Rico 00622
Email: caribbean@es@fws.gov

RE: USFWS Endangered Species Act Certifications – City Revitalization Program November 2024

We are submitting the following Self-Certifications for projects under the CDBG-DR City Revitalization Program. Attached are included the Self-Certifications that certify that the projects are in compliance and are not likely to adversely affect federally-listed species.

The following table includes the projects that are in compliance with the Blanket Clearance Letter for the Endangered Species act of 1973, as amended, and the Fish and Wildlife Coordination Act.

Project Number	Project Name
PR-CRP-000205	Hotel del Valenciano
PR-CRP-000771	Revitalization of Plaza Luis Muñoz Rivera in the Urban Center of Arecibo
PR-CRP-000876	Domingo and Plaza Mariano Quiñones
PR-CRP-001179	Rehabilitación y Mejoras al Edificio de Biblioteca Municipal

For more information, please contact the Permits and Environmental Compliance Division at environmentcdbg@vivienda.pr.gov or at (787)274.2527 ext. 4320.

Sincerely,

Permits and Environmental Compliance Division
Disaster Recovery Office

Self-Certification

http://www.fws.gov/caribbean/ES/Index.html

Endangered Species Act Certification

The U.S. Fish and Wildlife Service, Caribbean Ecological Services Field Office developed a Blanket Clearance Letter in compliance with Endangered Species Act of 1973, as amended, and the Fish and Wildlife Coordination Act for federally funded projects.

The Service determined that projects in compliance with the following criteria are not likely to adversely affect federally-listed species.

The proposed project, **Revitalization of Plaza Luis Muñoz Rivera in the Urban Center of Arecibo (PR-CRP-000771)**, consists of the revitalization of the Municipality of Arecibo's town square, including new flooring, redistribution of open spaces, installation of new lighting poles, enhancements to the surrounding sidewalks to comply with Americans with Disabilities Act (ADA) regulations, and installation of new park furniture, among other improvements. The project, intended to address the community's needs for recreational spaces, will also include improvements to the fountain and statue, and will provide a large gathering space for various events and activities. Puerto Rico Department of Housing (PRDOH) certifies that the project, located at **the intersection of Jose De Diego Street and Palma Street in Arecibo, PR (18.471919°, -66.715966°)**, complies with:

Check	Project Criteria
☐	1. Street resurfacing.
☒	2. Construction of gutters and sidewalks along existing roads.
☐	3. Reconstruction or emergency repairs of existing buildings, facilities and homes.
☐	4. Rehabilitation of existing occupied single-family homes, and buildings; provided that equipment storage or staging areas are not located on vacant property harboring a wetland and/or forested vegetation and that the lighting associated to the new facilities is not visible directly or indirectly from a beach.

☐	5. Demolition of dilapidated single-family homes or buildings; provided that the demolition debris is disposed in certified receiving facilities; equipment storage or staging areas are not located on vacant property harboring a wetland and/or forested vegetation.
☐	6. Rebuilding of demolished single-family homes or buildings, provided that the new construction is within the existing footprint of the previous structure and/or within pre- existing grassed or paved areas, and that the lighting associated to the new facilities are not visible directly or indirectly from a beach.
☐	7. Activities within existing Right of Ways (ROWs) of roads, bridges and highways, when limited to actions that do not involve cutting native vegetation or mayor earth moving; and are not located within, or adjacent to, drainages, wetlands, or aquatic systems. These activities include the installation of potable water and sanitary pipelines.
☒	8. Improvements to existing recreational facilities, including the installation of roofs to existing basketball courts, provided that the lighting associated to the facilities are not visible directly or indirectly from the beach.
☐	9. Construction of electric underground systems in existing towns and communities, provided that the property is not a wetland area and the lighting associated to the facilities are not visible directly or indirectly from the beach.
☐	10. Construction of facilities on vacant properties covered with grasses in urban areas, provided that the lighting associated to the facilities are not visible directly or indirectly from the beach.
☐	11. Construction of houses, buildings or acquiring lands in urban areas covered by grass for relocation of low-income families and/or facilities that have been affected by weather conditions.

USFWS Self-Certification
[PR-CRP-000771]

Dec. 2, 2024

Ángel G. López-Guzmán
Deputy Director
Permits and Environmental Compliance Division

Date

Office of Disaster Recovery
Address: P.O. Box 21365 San Juan, PR 00928
Telephone and Ext: 787-274-2527 ext. 4320
Email: environmentcdbg@vivienda.pr.gov

Appendix A
Project Maps

PR-CRP-000771 Toporaphic Map

Address: Jose De Diego Street and Palma Street, Arecibo, PR 00612

Coordinates: 18.471919°, -66.715966°

Legend

- Project Point
- Project Footprint

N

Scale: 1:12850

1 inch equals 0.2 miles

0 0.2 0.4 0.6 0.8 1 mi

Spatial Reference:
NAD83(NSRS2007) / Puerto Rico and Virgin Is.

Sources: USGS The National Map Viewer (USGS-https://apps.nationalmap.gov/downloader/).

PR-CRP-000771 Project Area Map

Address: Jose De Diego Street and Palma Street, Arecibo, PR 00612

Coordinates: 18.471919°, -66.715966°

Legend

- Project Point
- Proect Footprint

N

Scale: 1:1270

1 inch equals 0.02 miles

0 0.02 0.04 0.06 0.08 0.1 mi

Spatial Reference:
NAD83(NSRS2007) / Puerto Rico and Virgin Is.
Sources: NOAA Diigital Coast Viewer (NOAA-https://www.coast.noaa.gov/dataviewer/#/imagery/search/).

PR-CRP-000771 National Flood Hazard Layer FIRMette

Address: Jose De Diego Street and Palma Street, Arecibo, PR 00612
Coordinates: 18.471919°, -66.715966°

FEMA

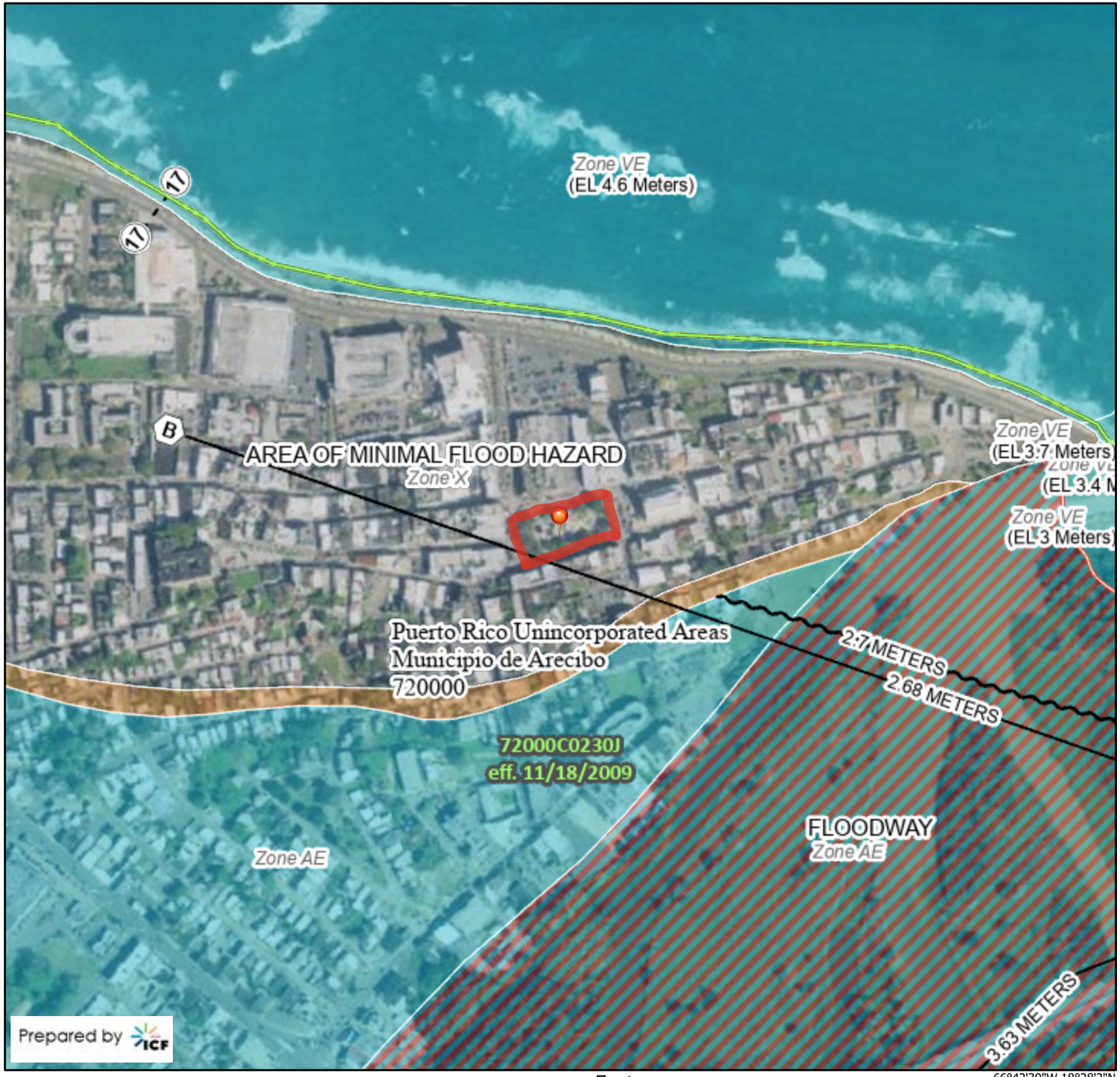

0 250 500 1,000 1,500 2,000 Feet

1:6,000

66°42'39"W 18°28'2"N

Basemap Imagery Source: USGS National Map 2023

Legend

SEE FIS REPORT FOR DETAILED LEGEND AND INDEX MAP FOR FIRM PANEL LAYOUT

SPECIAL FLOOD HAZARD AREAS
- Without Base Flood Elevation (BFE) *Zone A, V, A99*
- With BFE or Depth *Zone AE, AO, AH, VE, AR*
- Regulatory Floodway

OTHER AREAS OF FLOOD HAZARD
- 0.2% Annual Chance Flood Hazard, Areas of 1% annual chance flood with average depth less than one foot or with drainage areas of less than one square mile *Zone X*
- Future Conditions 1% Annual Chance Flood Hazard *Zone X*
- Area with Reduced Flood Risk due to Levee. See Notes. *Zone X*
- Area with Flood Risk due to Levee *Zone D*

OTHER AREAS
- NO SCREEN Area of Minimal Flood Hazard *Zone X*
- Effective LOMRs
- Area of Undetermined Flood Hazard *Zone D*

GENERAL STRUCTURES
- Channel, Culvert, or Storm Sewer
- Levee, Dike, or Floodwall

OTHER FEATURES
- 20.2 Cross Sections with 1% Annual Chance
- 17.5 Water Surface Elevation
- Coastal Transect
- 513 Base Flood Elevation Line (BFE)
- Limit of Study
- Jurisdiction Boundary
- Coastal Transect Baseline
- Profile Baseline
- Hydrographic Feature

MAP PANELS
- Digital Data Available
- No Digital Data Available
- Unmapped

N

The pin displayed on the map is an approximate point selected by the user and does not represent an authoritative property location.

This map complies with FEMA's standards for the use of digital flood maps if it is not void as described below. The basemap shown complies with FEMA's basemap accuracy standards

The flood hazard information is derived directly from the authoritative NFHL web services provided by FEMA. This map was exported on 11/8/2024 at 3:27 PM and does not reflect changes or amendments subsequent to this date and time. The NFHL and effective information may change or become superseded by new data over time.

This map image is void if the one or more of the following map elements do not appear: basemap imagery, flood zone labels, legend, scale bar, map creation date, community identifiers, FIRM panel number, and FIRM effective date. Map images for unmapped and unmodernized areas cannot be used for regulatory purposes.

PR-CRP-000771 Advisory Base Flood Elevation (ABFE) Map

Address: Jose De Diego Street and Palma Street, Arecibo, PR 00612
Coordinates: 18.471919°, -66.715966°

11/8/2024, 10:34:38 AM

1:2,257

0 0.02 0.04 0.07 mi

0 0.03 0.06 0.11 km

Flood Hazard Area (zoom in to make visible)

- A
- VE
- 0.2% Annual Chance Flood Zone
- A-Floodway
- Zone/BFE Boundary

Flood Hazard Extent

- 1% Annual Chance Flood
- 0.2% Annual Chance Flood
- Advisory Base Flood Elevation (zoom in to make visible)

FEMA, Source: Esri, Maxar, Earthstar Geographics, and the GIS User Community

Prepared by ICF

ArcGIS Web AppBuilder

FEMA |

PR-CRP-000771 Wetland Map

Address: Jose De Diego Street and Palma Street, Arecibo, PR 00612
Coordinates: 18.471919°, -66.715966°

U.S. Fish and Wildlife Service
National Wetlands Inventory

November 8, 2024

Wetlands

- Estuarine and Marine Deepwater
- Estuarine and Marine Wetland
- Freshwater Emergent Wetland
- Freshwater Forested/Shrub Wetland
- Freshwater Pond
- Lake
- Other
- Riverine

This map is for general reference only. The US Fish and Wildlife Service is not responsible for the accuracy or currentness of the base data shown on this map. All wetlands related data should be used in accordance with the layer metadata found on the Wetlands Mapper web site.

Prepared by ICF

National Wetlands Inventory (NWI)
This page was produced by the NWI mapper

PR-CRP-000771 Critical Habitat Map

Address: Jose De Diego Street and Palma Street, Arecibo, PR 00612

Coordinates: 18.471919°, -66.715966°

Legend

- Project Point
- Project Footprint
- NP
- WR

Critical Habitats

- FO
- MS

N

Scale: 1:25500
1 inch equals 0.4 miles

0 0.4 0.8 1.2 1.6 2 mi

Spatial Reference:
NAD83(NSRS2007) / Puerto Rico and Virgin Is.
Sources: GIS Puerto Rico (http://geoserver2.pr.gov/geoserver/pr_geodata/wfs' version='auto). Google Satellite Basemap.

Appendix B
Site Plan

N:\Proj\ARECIBO\903 PLAZA ARECIBO\DWG'S\003-903USI-1.dwg

PLAZA DEL DOMINO

MANUEL GALAN PEREZ (OFICINA CONSORCIO DE ARECIBO)

BETANCES STREET

MARIA DE L. VELASCO ALVAREZ (TACOS KIKO)

GRACIANO MARTINEZ SERRANO

RAFAEL CAMPOS MARQUES

JOSE DE DIEGO AVE.

WM(5)

C.O.

WM

L

PALMA STREET

SUCN. JORGE ESTEVA GIRAL

JUAN A. NUNEZ CRUZ

ARASIBO STEAKHOUSE

RAUL ORRIOLA HERNANDEZ

JOSE A. MONTIJO SOLER

MARILIA MERCADO SABINO

DACO

WV(2)

WM(2)

GONZALEZ MARIN STREET

PLAZA LUIS MUÑOZ RIVERA

JOSE DE DIEGO AVE.

LAB. CLINICO TOLEDO LLC (AAA, LENEL ROYAL ROOM)

LAB. CLINICO TOLEDO LLC LENEL ROYAL ROOM)

APS CLINICS

NADER ABDULLAH AL-KHATIB (GRAND STORES)

ARECIBO CITY HALL

JAURREGUI STR

COND. OLIVER

SONRISAS DE ARECIBO

WV

WM(4)

MARIA DE HOSTOS STREET

CATEDRAL SAN FELIPE APOSTOL

EXISTING SITE PLAN

SCALE: 1:200

NORTH

DATE	REVISIONS

SHEET NO: 3 OF 00

DRAWING NO: USI-1

CODE NO: 08-903-

SHEET TITLE: EXISTING SITE PLAN

SCALE: AS SHOWN

IGLESIAS • VAZQUEZ and ASSOCIATES
320 FORTALEZA STREET 2nd FLOOR SAN JUAN, PUERTO RICO 00902 TELS. 721-4545 721-4546
ENGINEERS • ARCHITECTS • PLANNERS

REVITALIZATION OF LUIS MUÑOZ RIVERA PLAZA IN THE URBAN CENTER
ARECIBO, PUERTO RICO

REVITALIZATION OF LUIS MUÑOZ RIVERA PLAZA IN THE URBAN CENTER
ARECIBO, PUERTO RICO

IGLESIAS • VAZQUEZ and ASSOCIATES
ENGINEERS • ARCHITECTS • PLANNERS
320 FORTALEZA STREET 2nd FLOOR SAN JUAN, PUERTO RICO 00902 TELS. 721-4545 721-4546

SHEET TITLE:
EXISTING TOPOGRAPHIC SITE PLAN
SCALE: AS SHOWN

CODE NO:
08-903-

DRAWING NO:
USI-2

SHEET NO:
3
OF
00

DATE	REVISIONS

EXISTING TOPOGRAPHIC SITE PLAN
SCALE: 1:200

NORTH

N:\Proj\ARECIBO\903 PLAZA ARECIBO\DWG'S\004-903USI-2EXIST TOPOGRAPHIC SITE.dwg

PALMA STREET

LAB. CLINICO TOLEDO LLC (AAA, LENEL ROYAL ROOM)

LAB. CLINICO TOLEDO LLC LENEL ROYAL ROOM)

APS CLINICS

NADER ABDULLAH AL-KHATIB (GRAND STORES)

ARECIBO CITY HALL

JAURREGUI STR

COND. OLIVER

JOSE DE DIEGO AVE.

RAFAEL CAMPOS MARQUES

GRACIANO MARTINEZ SERRANO

MARIA DE L. VELASCO ALVAREZ (TACOS KIKO)

BETANCES STREET

PALMA STREET

MANUEL GALAN PEREZ (OFICINA CONSORCIO DE ARECIBO)

GONZALEZ MARIN STREET

MARIA DE HOSTOS STREET

CATEDRAL SAN FELIPE APOSTOL

SONRISAS DE ARECIBO

DACO

MARILIA MERCADO SABINO

JOSE A. MONTIJO SOLER

RAUL ORRIOLA HERNANDEZ

ARASIBO STEAKHOUSE

JUAN A. NUNEZ CRUZ

SUCN. JORGE ESTEVA GIRAL

PLAZA DEL DOMINO

PROPOSED GRADING SITE PLAN

SCALE: 1:200

NORTH

LEGEND:

7.869 + EXISTING ELEV. TO REMAIN

7.869 + PROPOSED ELEV.

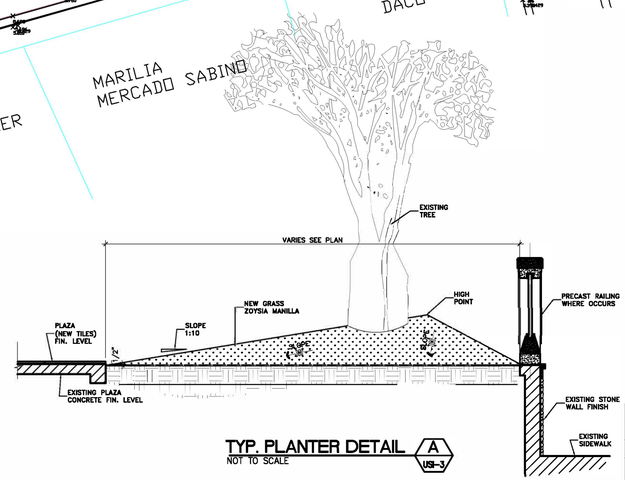

TYP. PLANTER DETAIL A (USI-3)

NOT TO SCALE

REVITALIZATION OF
LUIS MUÑOZ RIVERA PLAZA
IN THE URBAN CENTER
ARECIBO, PUERTO RICO

IGLESIAS•VAZQUEZ and ASSOCIATES
ENGINEERS · ARCHITECTS · PLANNERS
320 FORTALEZA STREET 2nd FLOOR SAN JUAN, PUERTO RICO 00902 TELS. 721-4545 721-4546

SHEET TITLE: PROPOSED GRADING SITE PLAN

SCALE: AS SHOWN

CODE NO: 08-903-

DRAWING NO: USI-3

SHEET NO: 5 OF 00

DATE	REVISIONS

N:\Proj\ARECIBO\903 PLAZA ARECIBO\DWG'S\005-903USI-3 PROP GRADING SITE PLAN.dwg

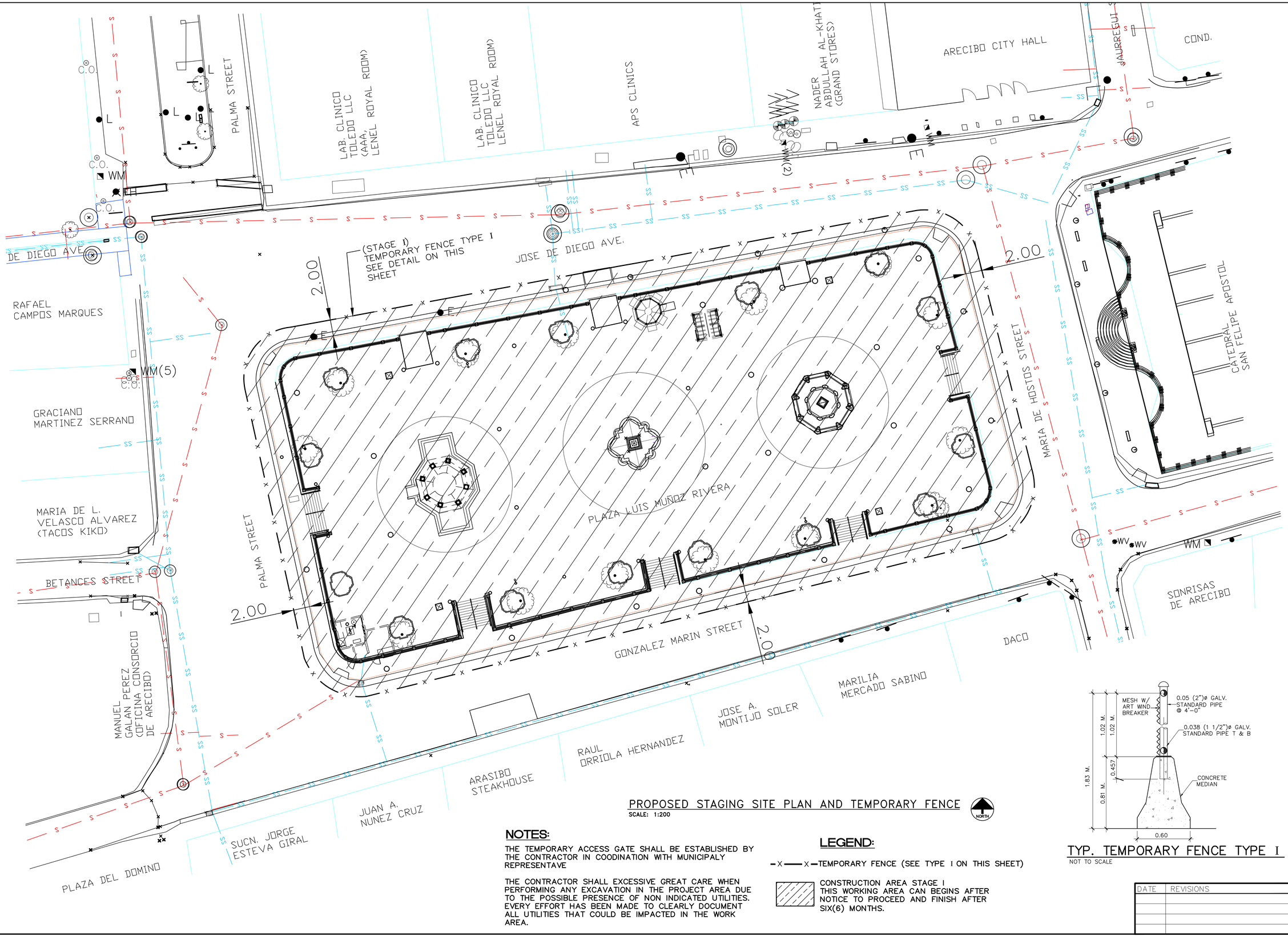

PROPOSED STAGING SITE PLAN AND TEMPORARY FENCE

SCALE: 1:200

NORTH

NOTES:

THE TEMPORARY ACCESS GATE SHALL BE ESTABLISHED BY THE CONTRACTOR IN COODINATION WITH MUNICIPALY REPRESENTAVE

THE CONTRACTOR SHALL EXCESSIVE GREAT CARE WHEN PERFORMING ANY EXCAVATION IN THE PROJECT AREA DUE TO THE POSSIBLE PRESENCE OF NON INDICATED UTILITIES. EVERY EFFORT HAS BEEN MADE TO CLEARLY DOCUMENT ALL UTILITIES THAT COULD BE IMPACTED IN THE WORK AREA.

LEGEND:

-X—X- TEMPORARY FENCE (SEE TYPE I ON THIS SHEET)

CONSTRUCTION AREA STAGE I
THIS WORKING AREA CAN BEGINS AFTER NOTICE TO PROCEED AND FINISH AFTER SIX(6) MONTHS.

TYP. TEMPORARY FENCE TYPE I

NOT TO SCALE

DATE	REVISIONS

REVITALIZATION OF
LUIS MUÑOZ RIVERA PLAZA
IN THE URBAN CENTER
ARECIBO, PUERTO RICO

IGLESIAS•VAZQUEZ and ASSOCIATES
320 FORTALEZA STREET 2nd FLOOR SAN JUAN, PUERTO RICO 00902 TELS. 721-4545 721-4546
ENGINEERS • ARCHITECTS • PLANNERS

SHEET TITLE:
PROPOSED STAGING PLAN AND TEMPORARY FENCE SITE PLAN

SCALE: AS SHOWN

CODE NO:
08-903-

DRAWING NO:
USI-4

SHEET NO:
6
OF
00

N:\Proj\ARECIBO\903 PLAZA ARECIBO\DWG'S\006-903USI-4 PROP TEMPOLARY FENCE STAGE 1.dwg

REVITALIZATION OF LUIS MUÑOZ RIVERA PLAZA IN THE URBAN CENTER ARECIBO, PUERTO RICO

IGLESIAS•VAZQUEZ and ASSOCIATES
ENGINEERS • ARCHITECTS • PLANNERS
320 FORTALEZA STREET 2nd FLOOR SAN JUAN, PUERTO RICO 00902 TELS. 721-4545 721-4546

BORING LOCATION PLAN

SHEET TITLE: BORING LOCATION PLAN
SCALE: AS SHOWN

CODE NO: 08-903-SS1

DRAWING NO: SS-1

SHEET NO: 7 OF 00

DATE	REVISIONS

BORING NO.1
X=170124.22
Y=270693.68
Z=7.876

BORING NO.2
X=170122.35
Y=270703.21
Z=7.952

BORING NO.3
X=170120.05
Y=270715.34
Z=7.897

BORING NO.4
X=170130.45
Y=270713.98
Z=8.017

BORING NO.5
X=170133.33
Y=270698.10
Z=7.915

BORING NO.6
X=170148.84
Y=270709.18
Z=7.937

BORING NO.7
X=170149.30
Y=270720.02
Z=7.960

BORING NO.8
X=170156.98
Y=270723.55
Z=7.997

BORING NO.9
X=170161.08
Y=270725.79
Z=8.039

BORING NO.10
X=170173.39
Y=270714.26
Z=7.963

BORING NO.11
X=170177.11
Y=270721.23
Z=8.020

BORING NO.12
X=170185.07
Y=270727.32
Z=8.023

BORING NO.13
X=170184.99
Y=270717.08
Z=7.957

BORING NO.14
X=170191.04
Y=270707.84
Z=7.872

BORING NO.15
X=170180.10
Y=270707.28
Z=7.875

BORING LOCATION PLAN

SCALE: 1:200

NORTH

LEGEND

ORIGINAL SUELOS INC LOCATIONS

PALMA STREET
LAB. CLINICO TOLEDO LLC (AAA, LENEL ROYAL ROOM)
APS CLINICS
NADER ABDULLAH AL-KHATIB (GRAND STORES)
ARECIBO CITY HALL
JAURREGUI STREET
COND. OLIVER
JOSE DE DIEGO AVE.
RAFAEL CAMPOS MARQUES
GRACIANO MARTINEZ SERRANO
MARIA DE L. VELASCO ALVAREZ (TACOS KIKO)
BETANCES STREET
MANUEL GALAN PEREZ (OFICINA CONSORCIO DE ARECIBO)
PLAZA LUIS MUÑOZ RIVERA
MARIA DE HOSTOS STREET
CATEDRAL SAN FELIPE APOSTOL
SONRISAS DE ARECIBO
GONZALEZ MARIN STREET
SUCN. JORGE ESTEVA GIRAL
JUAN A. NUNEZ CRUZ
ARASIBO STEAKHOUSE
RAUL ORRIOLA HERNANDEZ
JOSE A. MONTIJO SOLER
MARILIA MERCADO SABINO
DACO
PLAZA DEL DOMINO

N:\Proj\ARECIBO\903 PLAZA ARECIBO\DWG'S\007-903SS-1.dwg

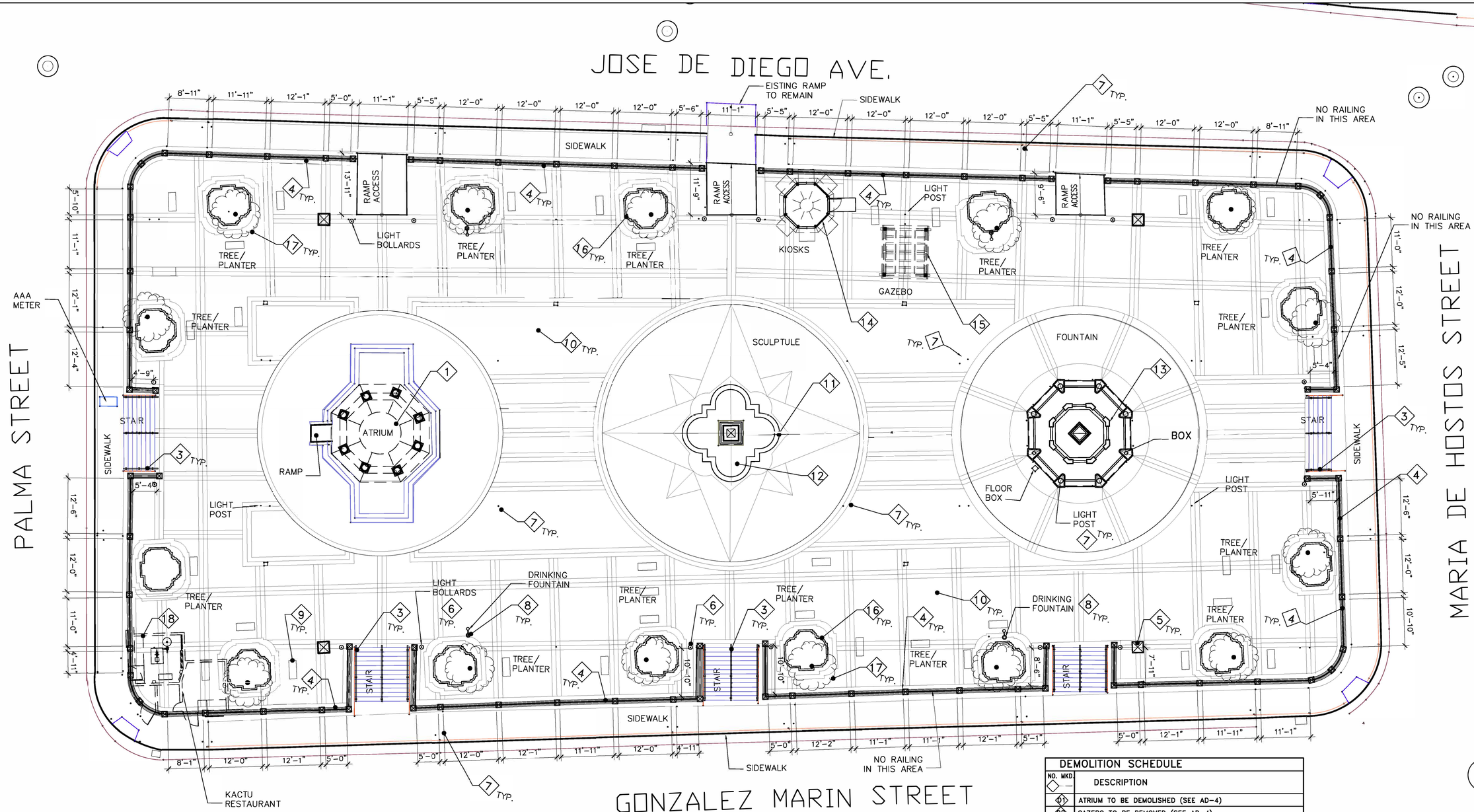

EXISTING AND DEMOLITION PLAZA FLOOR PLAN

SCALE: 3/32"=1'-0"

DEMOLITION SCHEDULE	
NO. MKD.	DESCRIPTION
01	ATRIUM TO BE DEMOLISHED (SEE AD-4)
02	GAZEBO TO BE REMOVED (SEE AD-4)
03	STAIR RAILING TO BE REMOVED-REFER TO ASBETO & LBP STUDY (TERNICA SPECS.)
04	GRILLES RAILING AND COLUMN TO BE REMOVED (SEE NOTE 3 - APPLIES TO GRILLES IN THIS ITEM)
05	CONCRETE MONUMENT TO BE REMOVED
06	LIGHT BOLLARDS TO BE REMOVED (SEE NOTE 1)
07	LIGHT POST TO BE REMOVED (SEE NOTE 3)
08	DRINKING FOUNTAIN TO BE REMOVED
09	BENCH TO BE REMOVED (SEE NOTE 3)
10	FLOOR FIN. TO BE REMOVED (SEE NOTE 1)
11	CONCRETE LOW WALL TO REMAIN AND REVITALIZED
12	PLANTING TO REMAIN AND TO BE REVITALIZED
13	FOUNTAIN AND WALL TO BE DEMOLISHED (SEE NOTE 1)
14	KIOSKS TO BE DEMOLISHED (SEE NOTE 1)
15	GAZEBO TO BE DEMOLISHED (SEE NOTE 1)
16	PLANTER TO BE DEMOLISHED (SEE NOTE 1)
17	TREE TO REMAIN
18	ELECTRICAL AND MECH. ROOM TO REMOVE EQUIPMENT (SEE NOTE 3)

NOTE:
1- THE CONTRACTOR WILL DISPOSE OF ALL THE EQUIPMENT AND MATERIALS REMOVED.

2- FOR STRUCTURES DETAILS SEE DWG. AD-3,4.

3- THE CONTRACTOR WILL TRANSPORT AND STORE THESE MATERIALS / EQUIPMENT AT A LOCATION AS INSTRUCTED THE MUNICIPALITY.

IMPORTANT NOTE:

THE EXISTING ELEMENTS TO BE DEMOLISHED IN THE PLAZA ARE NOT CHARACTER DEFINING ELEMENTS (THE FLOOR MATERIAL AND PATTERN, THE LARGE GAZEBO, THE CONCRETE PERIPHERAL RAILING, BENCHES, THE POLES AND LUMINARIES AND THE FOUNTAIN ELEMENTS). THE CHARACTER DEFINING ELEMENTS LEFT AND INCORPORATED AS PART OF THE PROJECT ARE: THE EXISTING FICUS TREES, THE CENTRAL OBELISK SCULPTURE AND THE SURROUNDING PLANTING AREA.

DATE	REVISIONS

REVITALIZATION OF
LUIS MUÑOZ RIVERA PLAZA
IN THE URBAN CENTER
ARECIBO, PUERTO RICO

IGLESIAS•VAZQUEZ and ASSOCIATES
320 FORTALEZA STREET SAN JUAN, PUERTO RICO 00902 2nd FLOOR TELS. 721-4545 721-4546
ENGINEERS · ARCHITECTS · PLANNERS

SHEET TITLE: EXISTING AND DEMOLITION PLAZA FLOOR PLAN
SCALE: AS SHOWN

CODE NO: 08-903-

DRAWING NO: AD-1

SHEET NO: 8 OF 00

N:\Proj\ARECIBO\903 PLAZA ARECIBO\DWGS\008-903AD-1.dwg

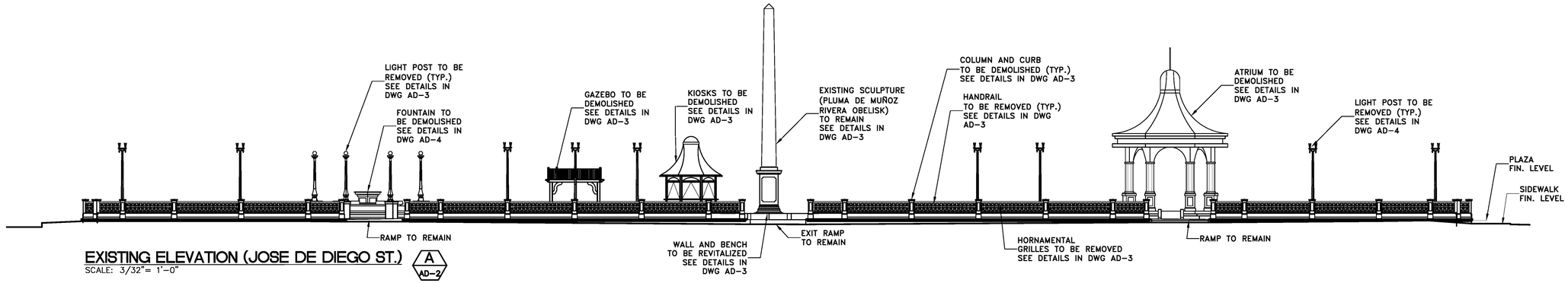

EXISTING ELEVATION (JOSE DE DIEGO ST.) A AD-2

SCALE: 3/32"= 1'-0"

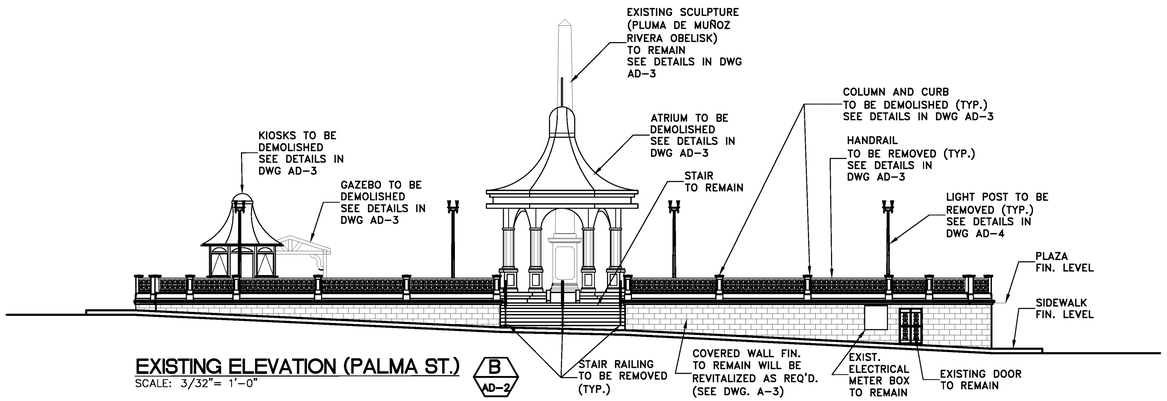

EXISTING ELEVATION (PALMA ST.) B AD-2

SCALE: 3/32"= 1'-0"

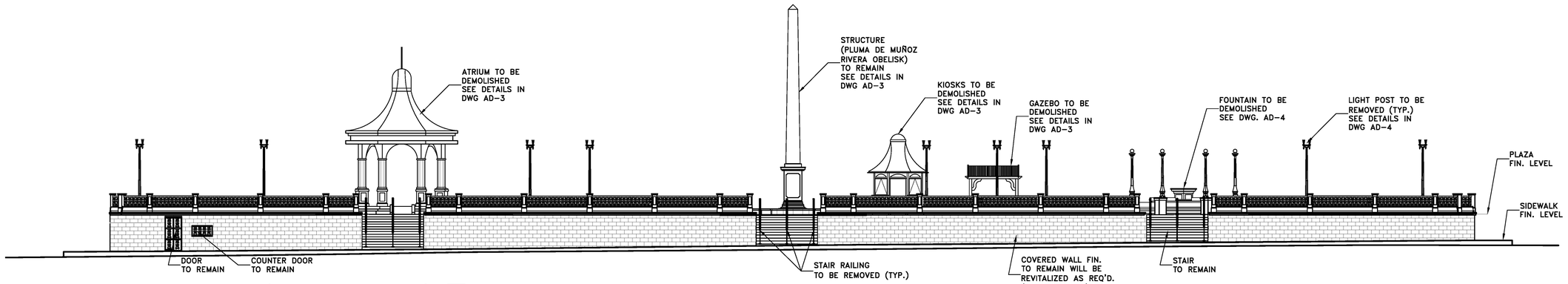

EXISTING ELEVATION (GONZALEZ MARIN ST.) C AD-2

SCALE: 3/32"= 1'-0"

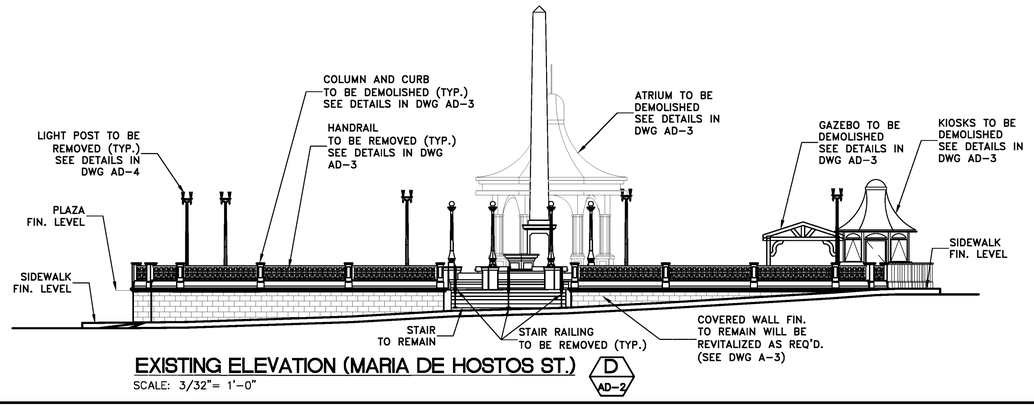

EXISTING ELEVATION (MARIA DE HOSTOS ST.) D AD-2

SCALE: 3/32"= 1'-0"

IMPORTANT NOTE:

THE EXISTING ELEMENTS TO BE DEMOLISHED IN THE PLAZA ARE NOT CHARACTER DEFINING ELEMENTS (THE FLOOR MATERIAL AND PATTERN, THE LARGE GAZEBO, THE CONCRETE PERIPHERAL RAILING, BENCHES, THE POLES AND LUMINARIES AND THE FOUNTAIN ELEMENTS). THE CHARACTER DEFINING ELEMENTS LEFT AND INCORPORATED AS PART OF THE PROJECT ARE: THE EXISTING FICUS TREES, THE CENTRAL OBELISK SCULPTURE AND THE SURROUNDING PLANTING AREA.

DATE	REVISIONS

REVITALIZATION OF
LUIS MUÑOZ RIVERA PLAZA
IN THE URBAN CENTER
ARECIBO, PUERTO RICO

IGLESIAS•VAZQUEZ and ASSOCIATES
320 FORTALEZA STREET 2nd FLOOR SAN JUAN, PUERTO RICO 00902 TELS. 721-4545 721-4546
ENGINEERS · ARCHITECTS · PLANNERS

SHEET TITLE: EXISTING ELEVATION

SCALE: AS SHOWN

CODE NO: 08-903-

DRAWING NO: AD-2

SHEET NO: 9 OF 00

N:\Proj\ARECIBO\903 PLAZA ARECIBO\DWG'S\009-010-011-903AD-2 - AD-3 - AD-4.dwg

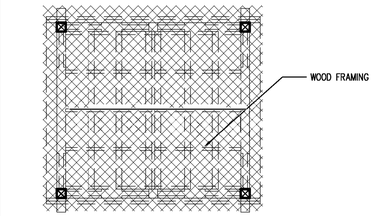

PLAN

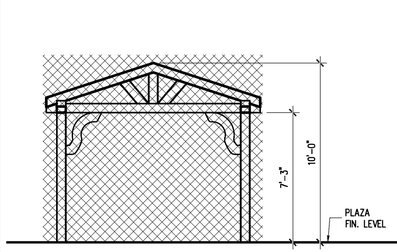

FRONT ELEVATION

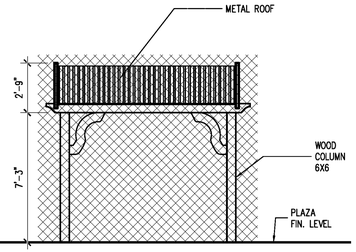

LATERAL ELEVATION

GAZEBO DETAILS
SCALE: 1/4"=1'-0"

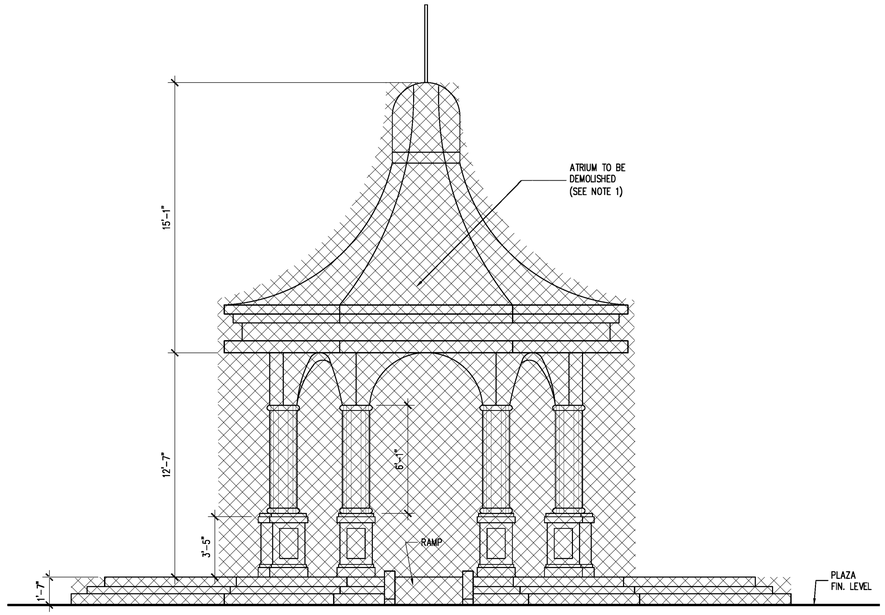

ELEVATION

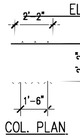

COL. PLAN

ATRIUM DETAILS
SCALE: 1/4"=1'-0"

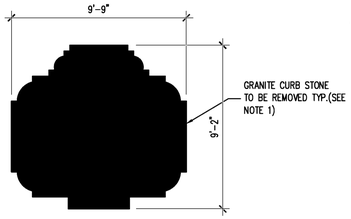

PLAN

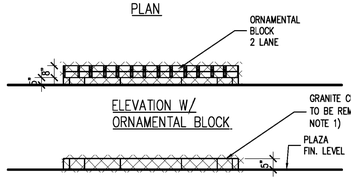

ELEVATION W/
ORNAMENTAL BLOCK

ELEVATION

TYPICAL PLANTING DETAILS
SCALE: 1/4"=1'-0"

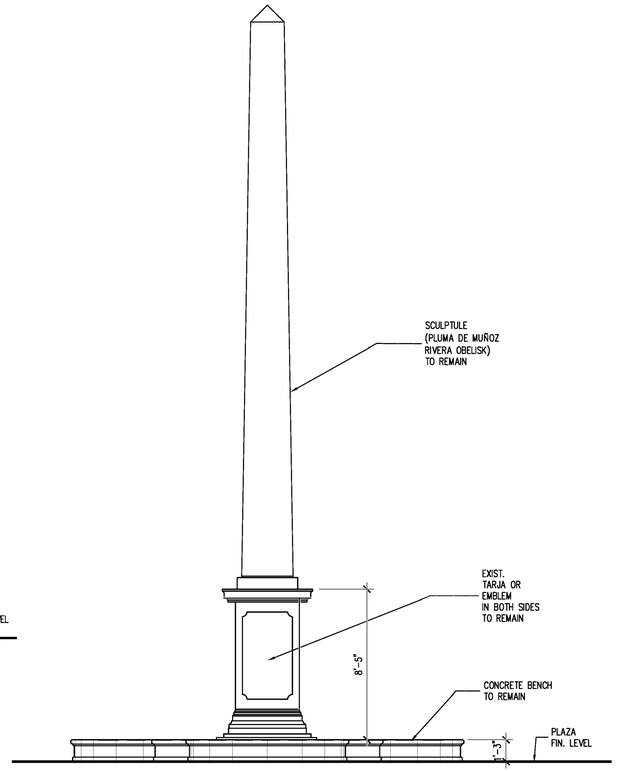

ELEVATION

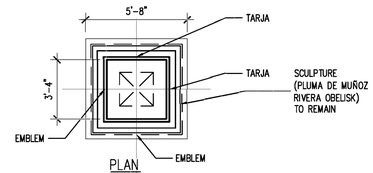

PLAN

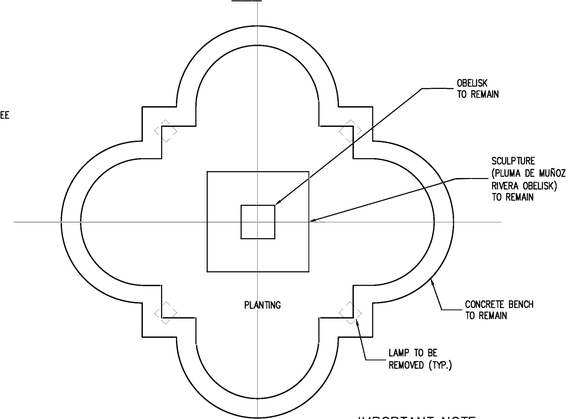

BENCH PLAN

SCULPTURE DETAILS
SCALE: 1/4"=1'-0"

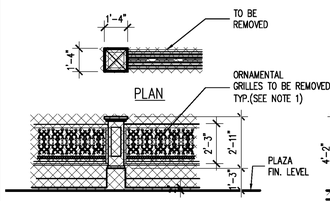

PLAZA ELEVATION

NOTE:
THE EXISTING ORNAMENTAL METAL GRILLES WILL BE TRANSPORTED AND STORED AT A LOCATION AS INSTRUCTED BY THE MUNICIPALITY.

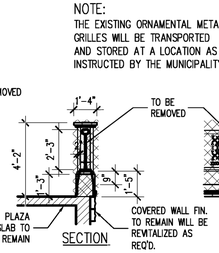

SECTION

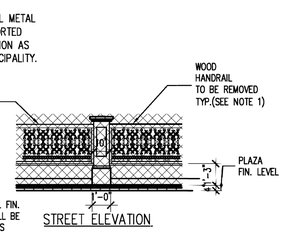

STREET ELEVATION

TYPICAL PLAZA PERIPHERAL RAILING DETAILS
SCALE: 1/4"=1'-0"

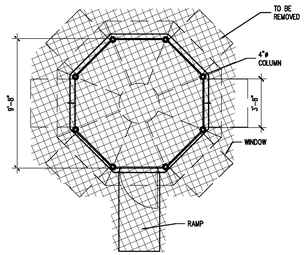

PLAN

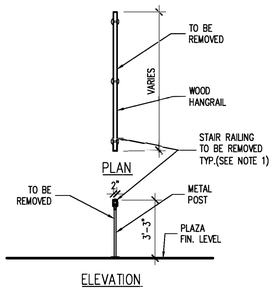

PLAN

ELEVATION

TYPICAL STAIR RAILING DETAILS
SCALE: 1/4"=1'-0"

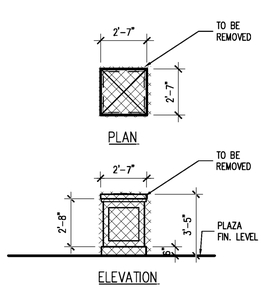

PLAN

ELEVATION

TYPICAL CONCRETE BOLLARD DETAILS
SCALE: 1/4"=1'-0"

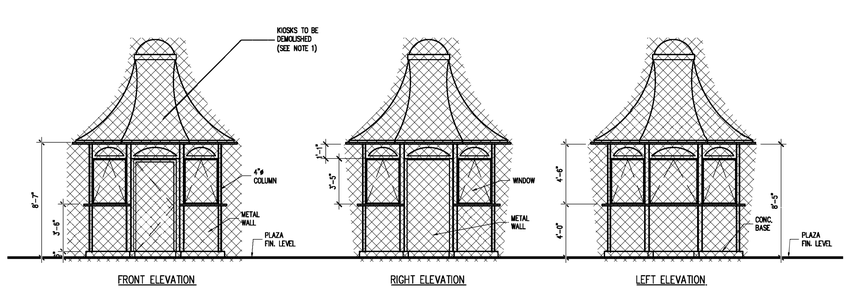

FRONT ELEVATION RIGHT ELEVATION LEFT ELEVATION

KIOSK DETAILS
SCALE: 3/16"=1'-0"

LEGEND:

EXISTING TO REMAIN

EXISTING TO BE DEMOLISHED

IMPORTANT NOTE:

THE EXISTING ELEMENTS TO BE DEMOLISHED IN THE PLAZA ARE NOT CHARACTER DEFINING ELEMENTS (THE FLOOR MATERIAL AND PATTERN, THE LARGE GAZEBO, THE CONCRETE PERIPHERAL RAILING, BENCHES, THE POLES AND LUMINARIES AND THE FOUNTAIN ELEMENTS). THE CHARACTER DEFINING ELEMENTS LEFT AND INCORPORATED AS PART OF THE PROJECT ARE: THE EXISTING FICUS TREES, THE CENTRAL OBELISK SCULPTURE AND THE SURROUNDING PLANTING AREA.

DATE	REVISIONS

REVITALIZATION OF
LUIS MUÑOZ RIVERA PLAZA
IN THE URBAN CENTER
ARECIBO, PUERTO RICO

IGLESIAS•VAZQUEZ and ASSOCIATES
320 FORTALEZA STREET 2nd FLOOR SAN JUAN, PUERTO RICO 00902 TELS. 721-4545 721-4546
ENGINEERS • ARCHITECTS • PLANNERS

SHEET TITLE:
EXISTING AND DEMOLITION
PLAZA MISCELLANEOUS DETAILS
SCALE: AS SHOWN

CODE NO:
08-903-

DRAWING NO:
AD-3

SHEET NO:
10
OF
00

N:\Pro\ARECIBO\903 PLAZA ARECIBO\DWG'S\009-010-011-903AD-2 - AD-3 - AD-4.dwg

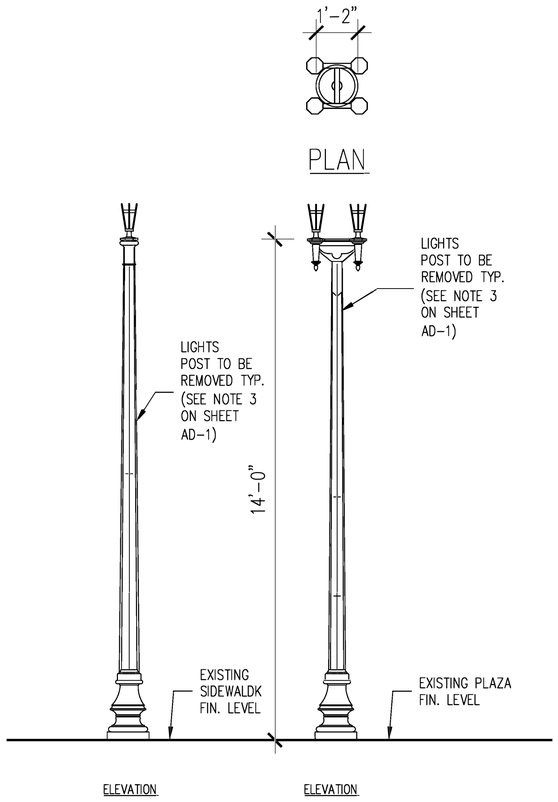

PLAZA LIGHT POLE DETAILS

SCALE: 1/2"=1'-0"

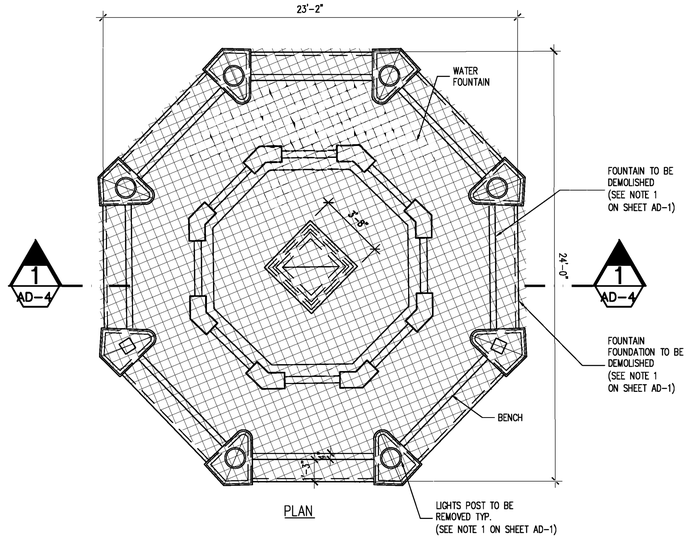

FOUNTAIN DETAILS

SCALE: 1/4"=1'-0"

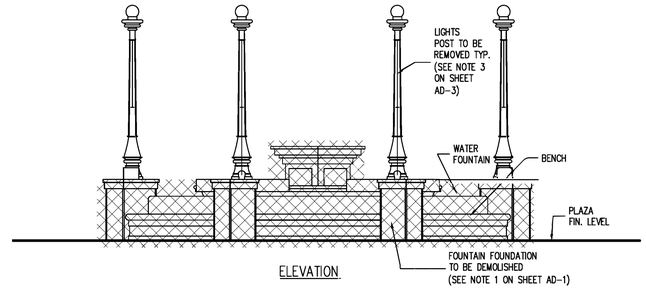

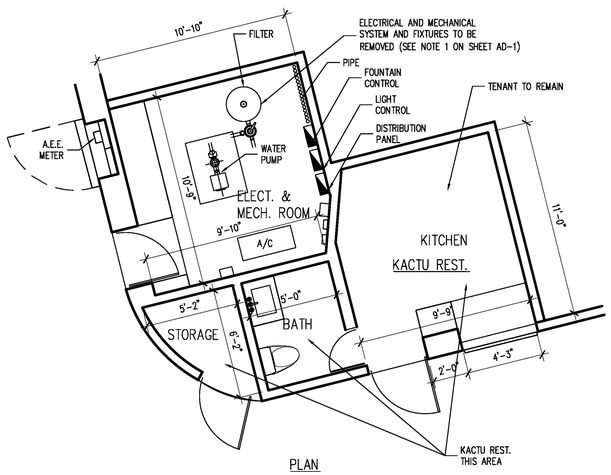

ELECTRICAL ROOM AND KITCHEN DETAILS

SCALE: 1/4"=1'-0"

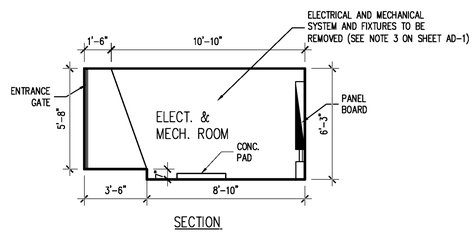

IMPORTANT NOTE:

THE EXISTING ELEMENTS TO BE DEMOLISHED IN THE PLAZA ARE NOT CHARACTER DEFINING ELEMENTS (THE FLOOR MATERIAL AND PATTERN, THE LARGE GAZEBO, THE CONCRETE PERIPHERAL RAILING, BENCHES, THE POLES AND LUMINARIES AND THE FOUNTAIN ELEMENTS). THE CHARACTER DEFINING ELEMENTS LEFT AND INCORPORATED AS PART OF THE PROJECT ARE: THE EXISTING FICUS TREES, THE CENTRAL OBELISK SCULPTURE AND THE SURROUNDING PLANTING AREA.

DATE	REVISIONS

REVITALIZATION OF
LUIS MUÑOZ RIVERA PLAZA
IN THE URBAN CENTER
ARECIBO, PUERTO RICO

IGLESIAS • VAZQUEZ and ASSOCIATES
320 FORTALEZA STREET 2nd FLOOR SAN JUAN, PUERTO RICO 00902 TELS. 721-4545 721-4546
ENGINEERS • ARCHITECTS • PLANNERS

SHEET TITLE: EXISTING AND DEMOLITION PLAZA MISCELLANEOUS DETAILS
SCALE: AS SHOWN

CODE NO: 08-903-

DRAWING NO: AD-4

SHEET NO: 11 OF 00

N:\Proj\ARECIBO\903 PLAZA ARECIBO\DWG'S\009-010-011-903AD-2 - AD-3 - AD-4.dwg

JOSE DE DIEGO AVE.

RAFAEL CAMPOS MARQUES

GRACIANO MARTINEZ SERRANO

MARIA DE L. VELASCO ALVAREZ (TACOS KIKO)

BETANCES STREET

MANUEL GALAN PEREZ (OFICINA CONSORCIO DE ARECIBO)

PALMA STREET

LAB. CLINICO TOLEDO LLC (AAA, LENEL ROYAL ROOM)

LAB. CLINICO TOLEDO LLC LENEL ROYAL ROOM)

APS CLINICS

NADER ABDULLAH AL-KHATIB (GRAND STORES)

ARECIBO CITY HALL

JAURREGUI STREET

JOSE DE DIEGO AVE.

CONCRETE TABLE AND SEAT SEE DET. A-9

BIKE RACK SEE DET. A-8

CONCRETE BENCH SEE DET. IN DWG. A-5

SIDEWALK

PLANTING

RAMP-1

RAMP-2

RAMP-3

SEE DETAILS IN DWG. A-14

CONCRETE BENCH SEE DET. A-5

TRASH CONTAINER SEE DET. A-8

COVERED AREA

E.L.E.C.I. ROOM

MECH. ROOM

LIGHT POLE SEE DETAILS IN DWG. A-8

2'-6" 28'-0" 20'-0" 58'-0" 22'-0" 58'-0" 20'-0" 28'-0" 2'-6"

SEE DETAILS IN DWG. A-10

SEE DETAILS IN DWG. A-12

SEE DETAILS IN DWG. A-13

CONCRETE TABLE AND SEAT SEE DET. A-9

ISABEL II STATUE

ACTIVITIES AREA

SCULPTURE

FOUNTAIN

STAIR-W

STAIR-E

TRASH CONTAINER SEE DET. A-8

LIGHT POLE SEE DETAILS IN DWG. A-4

BENCH SEE DETAILS IN DWG. A-5

STAIR-1

STAIR-2

STAIR-3

LIGHT POLE SEE DETAILS IN DWG. A-8

CONCRETE TABLE AND SEAT SEE DET.

SEE RAILING DETAILS IN DWG. A-5

CONCRETE TABLE AND SEAT SEE DET. A-9

PALMA STREET

MARIA DE HOSTOS STREET

GONZALEZ MARIN STREET

NEW PLANTING SEE DETAILS IN DWG. A-8

CATEDRAL SAN FELIPE APOSTOL

DEL DOMINO

SUCN. JORGE ESTEVA GIRAL

JUAN A. NUNEZ CRUZ

ARASIBO STEAKHOUSE

RAUL ORRIOLA HERNANDEZ

JOSE A. MONTIJO SOLER

MARILIA MERCADO SABINO

DACO

SONRISAS DE ARECIBO

PROPOSED ARCHITECTURE PLAZA SITE PLAN

SCALE: 1/16"=1'-0"

NORTH

N:\Proj\ARECIBO\903 PLAZA ARECIBO\DWG'S\012-903A-1 ARCH SITE PLAN.dwg

REVITALIZATION OF
LUIS MUÑOZ RIVERA PLAZA
IN THE URBAN CENTER
ARECIBO, PUERTO RICO

IGLESIAS•VAZQUEZ and ASSOCIATES
320 FORTALEZA STREET 2nd FLOOR SAN JUAN, PUERTO RICO 00902 TELS. 721-4545 721-4546
ENGINEERS · ARCHITECTS · PLANNERS

SHEET TITLE: PROPOSED ARCHITECTURE PLAZA SITE PLAN
SCALE: AS SHOWN

CODE NO: 08-903-

DRAWING NO: A-1

SHEET NO: 12 OF 00

DATE	REVISIONS

CONCRETE TABLE AND SEAT SEE DET. ON DWG. A-9

BIKE RACK SEE DET. ON DWG. A-9

CONCRETE BENCH SEE DET. ON DWG. A-3

REPLACE LIGHT POLE ON SIDEWALK (TYP.) SEE DETAILS IN DWG. A-8

SEE DETAILS ON DWG. A-

CONCRETE BENCH SEE DET. ON DWG A-5

TRASH CONTAINER SEE DET. ON DWG. A-8

CONCRETE TABLE AND SEAT SEE DET. ON DWG. A-9

PLANTING

RAMP-1 001

RAMP-2 002

RAMP-3 003

SIDEWALK 017

COVERED AREA 014

ELECT. ROOM 015

MECH. ROOM 016

FLOOR HOSE BOSE (TYP.) SEE DET. ON DWG. P-1

2'-0" 28'-0" 20'-0" 58'-0" 22'-0" 58'-0" 20'-0" 28'-0" 2'-0"

10'-0" 10'-0" 11'-0" 11'-0" 10'-0" 10'-0"

SEE DETAILS IN DWG. A-10

SEE DETAILS IN DWG. A-12

SEE DETAILS IN DWG. A-13

32'-0"

20'-0"

STAIR-W 006

STAIR-E 007

SIDEWALK 027

SIDEWALK 037

ISABEL II STATUE 002

24'-6"

R18'-0"

ACTIVITIES AREA 003

SCULPTURE 004

PLAZA 001

FOUNTAIN 005

38'-0"

LIGHT POLE SEE DETAILS ON DWG. A-8

A A-2

B A-2

C A-2

D A-2

LIGHT POLE SEE DETAILS ON DWG. A-8

FLOOR HOSE BOSE (TYP.) SEE DET. ON DWG. P-1

BENCH SEE DETAILS ON DWG. A-8

TRASH CONTAINER SEE DET. ON DWG. A-8

LIGHT POLE SEE DETAILS ON DWG. A-8

CONCRETE TABLE AND SEAT SEE DET. ON DWG A-9

STAIR-1 008

STAIR-2 009

STAIR-3 010

SIDEWALK 017

SEE RAILING DETAILS ON DWG. A-5

SEE RAILING DETAILS ON DWG. A-5

SEE RAILING DETAILS ON DWG. A-5

CONCRETE TABLE AND SEAT SEE DET. ON DWG. A-9

REPLACE LIGHT POLE ON SIDEWALK (TYP.) SEE DETAILS IN DWG. A-8

PROPOSED PLAZA FLOOR PLAN

SCALE: 3/32"=1'-0"

NORTH

N:\Proj\Arecibo\903 PLAZA ARECIBO\DWGS\013-903A-2.dwg

REVITALIZATION OF
LUIS MUÑOZ RIVERA PLAZA
IN THE URBAN CENTER
AREGBO, PUERTO RICO

IGLESIAS•VAZQUEZ and ASSOCIATES
ENGINEERS · ARCHITECTS · PLANNERS
39 FORTALEZA STREET 2nd FL. OOR SAN J AN. PU ERO RI O 00 02 TE LS. 721-45 45 721-4546

SHEET TITLE
PROPOSED PLAZA FLOOR PLAN

SCALE AS SHOWN

CODE NO:
08-903-

DRAWING NO:
A-2

SHEET NO:
13
OF
00

DATE	REVISIONS

Appendix C
Site Photos

Nov 1, 2023 10:45:09 AM
18.4721542N 66.71551841W
184° S
Arecibo Pueblo
Arecibo

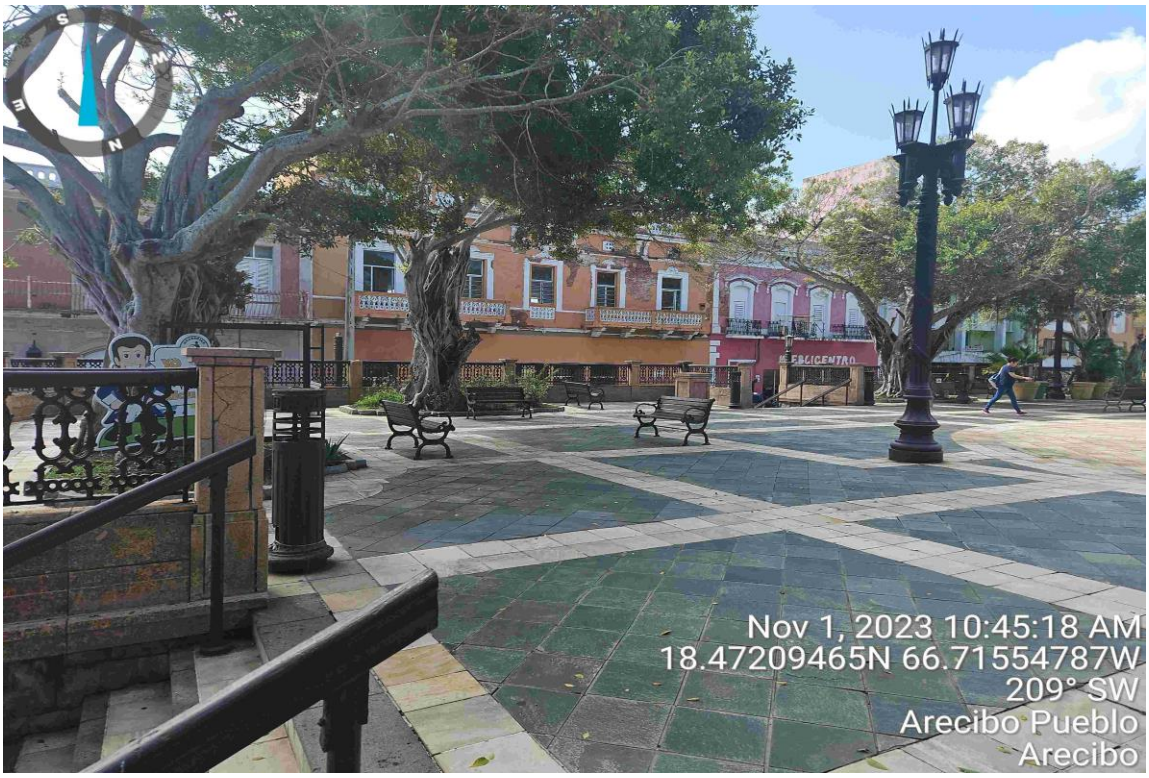
Nov 1, 2023 10:45:18 AM
18.47209465N 66.71554787W
209° SW
Arecibo Pueblo
Arecibo

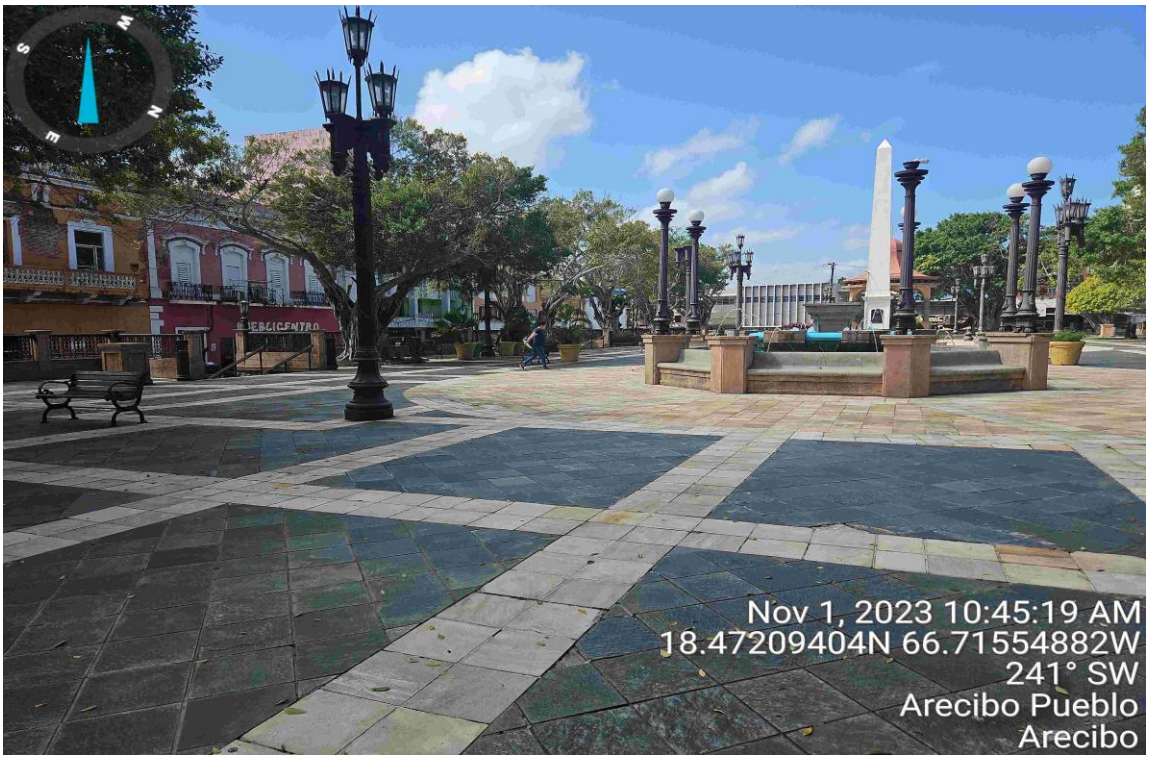
Nov 1, 2023 10:45:19 AM
18.47209404N 66.71554882W
241° SW
Arecibo Pueblo
Arecibo

Nov 1, 2023 10:45:24 AM
18.47209549N 66.71555458W
332° NW
106 Avenida José de Diego
Arecibo Pueblo
Arecibo

Appendix D
IPaC Information

IPaC resource list

This report is an automatically generated list of species and other resources such as critical habitat (collectively referred to as *trust resources*) under the U.S. Fish and Wildlife Service's (USFWS) jurisdiction that are known or expected to be on or near the project area referenced below. The list may also include trust resources that occur outside of the project area, but that could potentially be directly or indirectly affected by activities in the project area. However, determining the likelihood and extent of effects a project may have on trust resources typically requires gathering additional site-specific (e.g., vegetation/species surveys) and project-specific (e.g., magnitude and timing of proposed activities) information.

Below is a summary of the project information you provided and contact information for the USFWS office(s) with jurisdiction in the defined project area. Please read the introduction to each section that follows (Endangered Species, Migratory Birds, USFWS Facilities, and NWI Wetlands) for additional information applicable to the trust resources addressed in that section.

NOT FOR CONSULTATION

Location

Arecibo County, Puerto Rico

Local office

Caribbean Ecological Services Field Office

(939) 320-3135
(787) 851-7440
CARIBBEAN_ES@FWS.GOV

MAILING ADDRESS
Post Office Box 491
Boqueron, PR 00622-0491

PHYSICAL ADDRESS
Office Park I
State Road #2 Km 156.5, Suite 303}
Mayaguez, PR 00680

NOT FOR CONSULTATION

Endangered species

This resource list is for informational purposes only and does not constitute an analysis of project level impacts.

The primary information used to generate this list is the known or expected range of each species. Additional areas of influence (AOI) for species are also considered. An AOI includes areas outside of the species range if the species could be indirectly affected by activities in that area (e.g., placing a dam upstream of a fish population even if that fish does not occur at the dam site, may indirectly impact the species by reducing or eliminating water flow downstream). Because species can move, and site conditions can change, the species on this list are not guaranteed to be found on or near the project area. To fully determine any potential effects to species, additional site-specific and project-specific information is often required.

Section 7 of the Endangered Species Act **requires** Federal agencies to "request of the Secretary information whether any species which is listed or proposed to be listed may be present in the area of such proposed action" for any project that is conducted, permitted, funded, or licensed by any Federal agency. A letter from the local office and a species list which fulfills this requirement can **only** be obtained by requesting an official species list from either the Regulatory Review section in IPaC (see directions below) or from the local field office directly.

For project evaluations that require USFWS concurrence/review, please return to the IPaC website and request an official species list by doing the following:

1. Draw the project location and click CONTINUE.
2. Click DEFINE PROJECT.
3. Log in (if directed to do so).
4. Provide a name and description for your project.
5. Click REQUEST SPECIES LIST.

Listed species[1] and their critical habitats are managed by the Ecological Services Program of the U.S. Fish and Wildlife Service (USFWS) and the fisheries division of the National Oceanic and Atmospheric Administration (NOAA Fisheries[2]).

Species and critical habitats under the sole responsibility of NOAA Fisheries are **not** shown on this list. Please contact NOAA Fisheries for species under their jurisdiction.

---

1. Species listed under the Endangered Species Act are threatened or endangered; IPaC also shows species that are candidates, or proposed, for listing. See the listing status page for more information. IPaC only shows species that are regulated by USFWS (see FAQ).

NOT FOR CONSULTATION

2. NOAA Fisheries, also known as the National Marine Fisheries Service (NMFS), is an office of the National Oceanic and Atmospheric Administration within the Department of Commerce.

The following species are potentially affected by activities in this location:

Mammals

NAME	STATUS
West Indian Manatee Trichechus manatus Wherever found There is **final** critical habitat for this species. Your location does not overlap the critical habitat. https://ecos.fws.gov/ecp/species/4469	Threatened Marine mammal

Reptiles

NAME	STATUS
Puerto Rican Boa Chilabothrus inornatus Wherever found No critical habitat has been designated for this species. https://ecos.fws.gov/ecp/species/6628	Endangered

Critical habitats

Potential effects to critical habitat(s) in this location must be analyzed along with the endangered species themselves.

There are no critical habitats at this location.

You are still required to determine if your project(s) may have effects on all above listed species.

Bald & Golden Eagles

There are no documented cases of eagles being present at this location. However, if you believe eagles may be using your site, please reach out to the local Fish and Wildlife Service office.

Additional information can be found using the following links:

NOT FOR CONSULTATION

- Eagle Management https://www.fws.gov/program/eagle-management
- Measures for avoiding and minimizing impacts to birds https://www.fws.gov/library/collections/avoiding-and-minimizing-incidental-take-migratory-birds
- Nationwide conservation measures for birds https://www.fws.gov/sites/default/files/documents/nationwide-standard-conservation-measures.pdf
- Supplemental Information for Migratory Birds and Eagles in IPaC https://www.fws.gov/media/supplemental-information-migratory-birds-and-bald-and-golden-eagles-may-occur-project-action

What does IPaC use to generate the potential presence of bald and golden eagles in my specified location?

The potential for eagle presence is derived from data provided by the Avian Knowledge Network (AKN). The AKN data is based on a growing collection of survey, banding, and citizen science datasets and is queried and filtered to return a list of those birds reported as occurring in the 10km grid cell(s) which your project intersects, and that have been identified as warranting special attention because they are a BCC species in that area, an eagle (Eagle Act requirements may apply). To see a list of all birds potentially present in your project area, please visit the Rapid Avian Information Locator (RAIL) Tool.

What does IPaC use to generate the probability of presence graphs of bald and golden eagles in my specified location?

The Migratory Bird Resource List is comprised of USFWS Birds of Conservation Concern (BCC) and other species that may warrant special attention in your project location.

The migratory bird list generated for your project is derived from data provided by the Avian Knowledge Network (AKN). The AKN data is based on a growing collection of survey, banding, and citizen science datasets and is queried and filtered to return a list of those birds reported as occurring in the 10km grid cell(s) which your project intersects, and that have been identified as warranting special attention because they are a BCC species in that area, an eagle (Eagle Act requirements may apply), or a species that has a particular vulnerability to offshore activities or development.

Again, the Migratory Bird Resource list includes only a subset of birds that may occur in your project area. It is not representative of all birds that may occur in your project area. To get a list of all birds potentially present in your project area, please visit the Rapid Avian Information Locator (RAIL) Tool.

What if I have eagles on my list?

If your project has the potential to disturb or kill eagles, you may need to obtain a permit to avoid violating the Eagle Act should such impacts occur. Please contact your local Fish and Wildlife Service Field Office if you have questions.

Migratory birds

NOT FOR CONSULTATION

Certain birds are protected under the Migratory Bird Treaty Act[1] and the Bald and Golden Eagle Protection Act[2].

Any person or organization who plans or conducts activities that may result in impacts to migratory birds, eagles, and their habitats should follow appropriate regulations and consider implementing appropriate conservation measures, as described below.

1. The Migratory Birds Treaty Act of 1918.
2. The Bald and Golden Eagle Protection Act of 1940.

Additional information can be found using the following links:

- Eagle Management https://www.fws.gov/program/eagle-management
- Measures for avoiding and minimizing impacts to birds https://www.fws.gov/library/collections/avoiding-and-minimizing-incidental-take-migratory-birds
- Nationwide conservation measures for birds https://www.fws.gov/sites/default/files/documents/nationwide-standard-conservation-measures.pdf
- Supplemental Information for Migratory Birds and Eagles in IPaC https://www.fws.gov/media/supplemental-information-migratory-birds-and-bald-and-golden-eagles-may-occur-project-action

NOT FOR CONSULTATION

The data in this location indicates there are no migratory birds of conservation concern expected to occur in this area.

There may be migratory birds in your project area, but we don't have any survey data available to provide further direction. For additional information, please refer to the links above for recommendations to minimize impacts to migratory birds or contact your local FWS office.

Tell me more about conservation measures I can implement to avoid or minimize impacts to migratory birds.

Nationwide Conservation Measures describes measures that can help avoid and minimize impacts to all birds at any location year round. Implementation of these measures is particularly important when birds are most likely to occur in the project area. When birds may be breeding in the area, identifying the locations of any active nests and avoiding their destruction is a very helpful impact minimization measure. To see when birds are most likely to occur and be breeding in your project area, view the Probability of Presence Summary. Additional measures or permits may be advisable depending on the type of activity you are conducting and the type of infrastructure or bird species present on your project site.

What does IPaC use to generate the list of migratory birds that potentially occur in my specified location?

The Migratory Bird Resource List is comprised of USFWS Birds of Conservation Concern (BCC) and other species that may warrant special attention in your project location.

The migratory bird list generated for your project is derived from data provided by the Avian Knowledge Network (AKN). The AKN data is based on a growing collection of survey, banding, and citizen science datasets and is queried and filtered to return a list of those birds reported as occurring in the 10km grid cell(s) which your project intersects, and that have been identified as warranting special attention because they are a BCC species in that area, an eagle (Eagle Act requirements may apply), or a species that has a particular vulnerability to offshore activities or development.

Again, the Migratory Bird Resource list includes only a subset of birds that may occur in your project area. It is not representative of all birds that may occur in your project area. To get a list of all birds potentially present in your project area, please visit the Rapid Avian Information Locator (RAIL) Tool.

What does IPaC use to generate the probability of presence graphs for the migratory birds potentially occurring in my specified location?

The probability of presence graphs associated with your migratory bird list are based on data provided by the Avian Knowledge Network (AKN). This data is derived from a growing collection of survey, banding, and citizen science datasets.

Probability of presence data is continuously being updated as new and better information becomes available. To learn more about how the probability of presence graphs are produced and how to interpret them, go the Probability of Presence Summary and then click on the "Tell me about these graphs" link.

How do I know if a bird is breeding, wintering or migrating in my area?

To see what part of a particular bird's range your project area falls within (i.e. breeding, wintering, migrating or year-round), you may query your location using the RAIL Tool and look at the range maps provided for birds in your area at the bottom of the profiles provided for each bird in your results. If a bird on your migratory bird species list has a breeding season associated with it, if that bird does occur in your project area, there may be nests present at some point within the timeframe specified. If "Breeds elsewhere" is indicated, then the bird likely does not breed in your project area.

What are the levels of concern for migratory birds?

Migratory birds delivered through IPaC fall into the following distinct categories of concern:

1. "BCC Rangewide" birds are Birds of Conservation Concern (BCC) that are of concern throughout their range anywhere within the USA (including Hawaii, the Pacific Islands, Puerto Rico, and the Virgin Islands);
2. "BCC - BCR" birds are BCCs that are of concern only in particular Bird Conservation Regions (BCRs) in the continental USA; and
3. "Non-BCC - Vulnerable" birds are not BCC species in your project area, but appear on your list either because of the Eagle Act requirements (for eagles) or (for non-eagles) potential susceptibilities in offshore areas from certain types of development or activities (e.g. offshore energy development or longline fishing).

Although it is important to try to avoid and minimize impacts to all birds, efforts should be made, in particular, to avoid and minimize impacts to the birds on this list, especially eagles and BCC species of rangewide concern. For more information on conservation measures you can implement to help avoid and minimize migratory bird impacts and requirements for eagles, please see the FAQs for these topics.

NOT FOR CONSULTATION

Details about birds that are potentially affected by offshore projects

For additional details about the relative occurrence and abundance of both individual bird species and groups of bird species within your project area off the Atlantic Coast, please visit the Northeast Ocean Data Portal. The Portal also offers data and information about other taxa besides birds that may be helpful to you in your project review. Alternately, you may download the bird model results files underlying the portal maps through the NOAA NCCOS Integrative Statistical Modeling and Predictive Mapping of Marine Bird Distributions and Abundance on the Atlantic Outer Continental Shelf project webpage.

Bird tracking data can also provide additional details about occurrence and habitat use throughout the year, including migration. Models relying on survey data may not include this information. For additional information on marine bird tracking data, see the Diving Bird Study and the nanotag studies or contact Caleb Spiegel or Pam Loring.

What if I have eagles on my list?

If your project has the potential to disturb or kill eagles, you may need to obtain a permit to avoid violating the Eagle Act should such impacts occur.

Proper Interpretation and Use of Your Migratory Bird Report

The migratory bird list generated is not a list of all birds in your project area, only a subset of birds of priority concern. To learn more about how your list is generated, and see options for identifying what other birds may be in your project area, please see the FAQ "What does IPaC use to generate the migratory birds potentially occurring in my specified location". Please be aware this report provides the "probability of presence" of birds within the 10 km grid cell(s) that overlap your project; not your exact project footprint. On the graphs provided, please also look carefully at the survey effort (indicated by the black vertical bar) and for the existence of the "no data" indicator (a red horizontal bar). A high survey effort is the key component. If the survey effort is high, then the probability of presence score can be viewed as more dependable. In contrast, a low survey effort bar or no data bar means a lack of data and, therefore, a lack of certainty about presence of the species. This list is not perfect; it is simply a starting point for identifying what birds of concern have the potential to be in your project area, when they might be there, and if they might be breeding (which means nests might be present). The list helps you know what to look for to confirm presence, and helps guide you in knowing when to implement conservation measures to avoid or minimize potential impacts from your project activities, should presence be confirmed. To learn more about conservation measures, visit the FAQ "Tell me about conservation measures I can implement to avoid or minimize impacts to migratory birds" at the bottom of your migratory bird trust resources page.

NOT FOR CONSULTATION

Marine mammals

Marine mammals are protected under the Marine Mammal Protection Act. Some are also protected under the Endangered Species Act[1] and the Convention on International Trade in Endangered Species of Wild Fauna and Flora[2].

The responsibilities for the protection, conservation, and management of marine mammals are shared by the U.S. Fish and Wildlife Service [responsible for otters, walruses, polar bears, manatees, and dugongs] and NOAA Fisheries[3] [responsible for seals, sea lions, whales, dolphins, and porpoises]. Marine mammals under the responsibility of NOAA Fisheries are **not** shown on this list; for additional information on those species please visit the Marine Mammals page of the NOAA Fisheries website.

The Marine Mammal Protection Act prohibits the take of marine mammals and further coordination may be necessary for project evaluation. Please contact the U.S. Fish and Wildlife Service Field Office shown.

1. The Endangered Species Act (ESA) of 1973.
2. The Convention on International Trade in Endangered Species of Wild Fauna and Flora (CITES) is a treaty to ensure that international trade in plants and animals does not threaten their survival in the wild.
3. NOAA Fisheries, also known as the National Marine Fisheries Service (NMFS), is an office of the National Oceanic and Atmospheric Administration within the Department of Commerce.

The following marine mammals under the responsibility of the U.S. Fish and Wildlife Service are potentially affected by activities in this location:

NAME

West Indian Manatee *Trichechus manatus*
https://ecos.fws.gov/ecp/species/4469

NOT FOR CONSULTATION

Facilities

National Wildlife Refuge lands

Any activity proposed on lands managed by the National Wildlife Refuge system must undergo a 'Compatibility Determination' conducted by the Refuge. Please contact the individual Refuges to discuss any questions or concerns.

There are no refuge lands at this location.

Fish hatcheries

There are no fish hatcheries at this location.

Wetlands in the National Wetlands Inventory (NWI)

Impacts to NWI wetlands and other aquatic habitats may be subject to regulation under Section 404 of the Clean Water Act, or other State/Federal statutes.

For more information please contact the Regulatory Program of the local U.S. Army Corps of Engineers District.

NOT FOR CONSULTATION

This location did not intersect any wetlands mapped by NWI.

NOTE: This initial screening does **not** replace an on-site delineation to determine whether wetlands occur. Additional information on the NWI data is provided below.

Data limitations

The Service's objective of mapping wetlands and deepwater habitats is to produce reconnaissance level information on the location, type and size of these resources. The maps are prepared from the analysis of high altitude imagery. Wetlands are identified based on vegetation, visible hydrology and geography. A margin of error is inherent in the use of imagery; thus, detailed on-the-ground inspection of any particular site may result in revision of the wetland boundaries or classification established through image analysis.

The accuracy of image interpretation depends on the quality of the imagery, the experience of the image analysts, the amount and quality of the collateral data and the amount of ground truth verification work conducted. Metadata should be consulted to determine the date of the source imagery used and any mapping problems.

Wetlands or other mapped features may have changed since the date of the imagery or field work. There may be occasional differences in polygon boundaries or classifications between the information depicted on the map and the actual conditions on site.

Data exclusions

Certain wetland habitats are excluded from the National mapping program because of the limitations of aerial imagery as the primary data source used to detect wetlands. These habitats include seagrasses or submerged aquatic vegetation that are found in the intertidal and subtidal zones of estuaries and nearshore coastal waters. Some deepwater reef communities (coral or tuberficid worm reefs) have also been excluded from the inventory. These habitats, because of their depth, go undetected by aerial imagery.

Data precautions

Federal, state, and local regulatory agencies with jurisdiction over wetlands may define and describe wetlands in a different manner than that used in this inventory. There is no attempt, in either the design or products of this inventory, to define the limits of proprietary jurisdiction of any Federal, state, or local government or to establish the geographical scope of the regulatory programs of government agencies. Persons intending to engage in activities involving modifications within or adjacent to wetland areas should seek the advice of appropriate Federal, state, or local agencies concerning specified agency regulatory programs and proprietary jurisdictions that may affect such activities.

NOT FOR CONSULTATION

U.S. Fish & Wildlife Service

Caribbean ES Puerto Rican Boa

Puerto Rican Boa

Generated July 12, 2024 05:33 PM UTC, IPaC v6.112.0-rc2

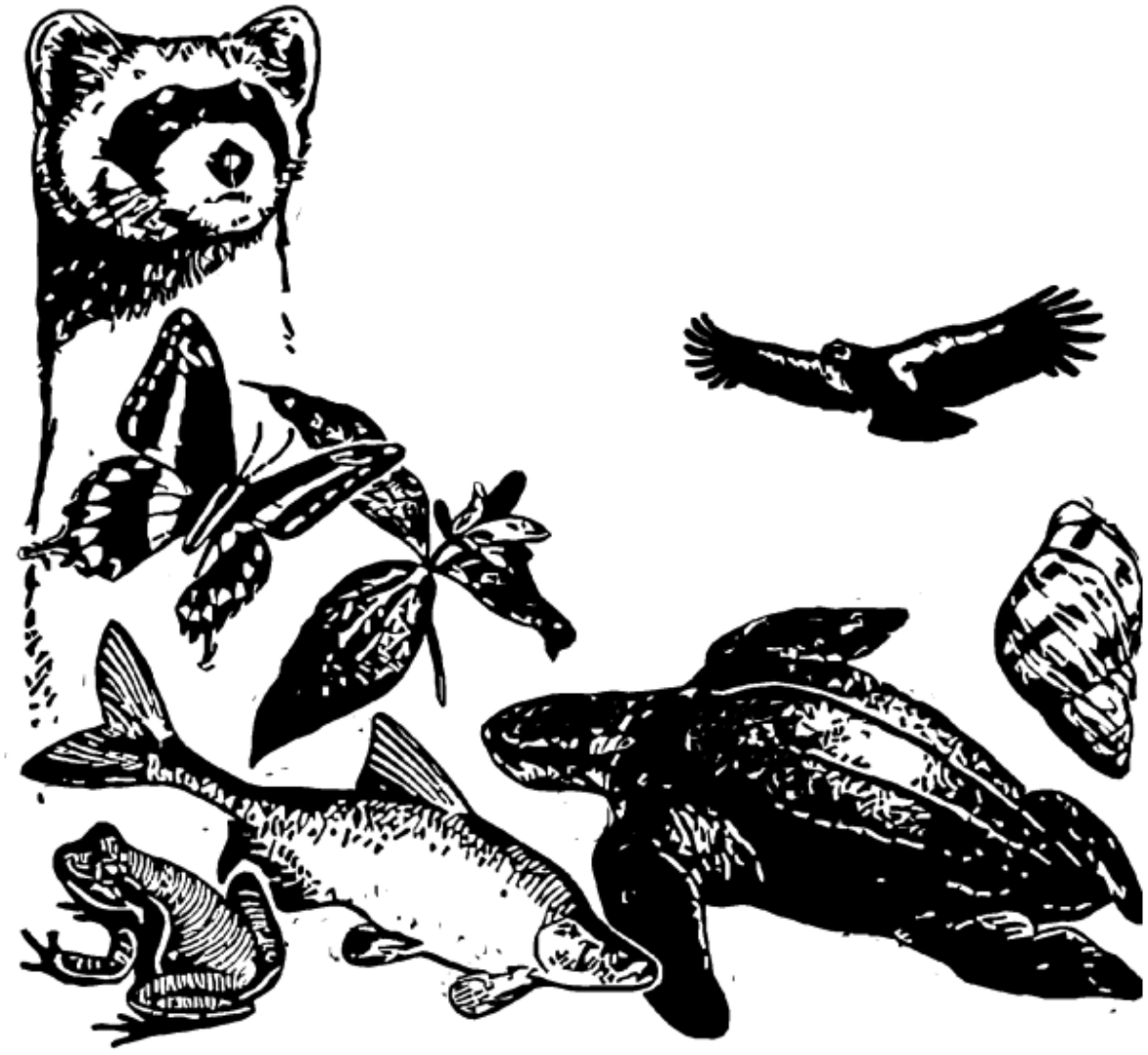

IPaC - Information for Planning and Consultation (https://ipac.ecosphere.fws.gov/): A project planning tool to help streamline the U.S. Fish and Wildlife Service environmental review process.

U.S. FISH AND WILDLIFE SERVICE
CARIBBEAN ECOLOGICAL SERVICES FIELD OFFICE

Conservation Measures for the Puerto Rican boa (*Chilabothrus inornatus*)

Section 7 (a)(1) of the Endangered Species Act (ESA) charges Federal agencies to aid in the conservation of listed species, and section 7 (a)(2) requires the agencies, through consultation with the U.S. Fish and Wildlife Service (Service), to ensure their activities are not likely to jeopardize the continued existence of listed species or adversely modify designated critical habitats. Section 7 applies to the management of Federal lands as well as Federal actions that may affect federally listed species, such as Federal approval of private activities through the issuance of Federal funding, permits, licenses, or other actions. Any person that injures, captures, or kills a Puerto Rico boa is subject to penalties under the ESA. If Federal funds or permits are needed, the funding or permitting agency should initiate Section 7 consultation with the Service. To initiate a consultation under the Section 7 of the ESA, you must submit a project package with the established minimum requirements. These conservation measures should be incorporated into the project plans to minimize possible impacts to the species.

The endangered Puerto Rican (PR) boa (*Chilabothrus inornatus*, formerly *Epicrates inornatus*) is the largest endemic snake species that inhabits Puerto Rico. The PR boa is non-venomous and does not pose any life threatening danger to humans, but some individuals may try to bite if disturbed or during capture or handling. Its body color ranges from tan to dark brown with irregular diffuse marking on the dorsum, but some individuals lack marking and are uniformly dark. Juveniles may have a reddish color with more pronounced markings. In general, as they mature, their body color tends to darken.

Adult PR boa – *Chilabothrus inornatus*
Photo: Puerto Rico by JP Zegarra

Last Revised: January 2024

The PR boa was federally listed in 1970. Currently, the species has an island-wide distribution and occurs in a wide variety of habitat types, ranging from wet montane to subtropical dry forest and can be found from mature forest to areas with different degrees of human disturbance such as roadsides or houses, especially if near their habitat in rural areas. The PR boa is considered mostly nocturnal, remaining less active, concealed or basking under the sun during the day.

The Service has developed the following conservation measures with the purpose of assisting others to avoid or minimize adverse effects to the PR boa and its habitat. These recommendations may be incorporated into new project plans and under certain circumstances into existing projects. Depending on the project, additional conservation measures can be implemented besides the ones presented in this document.

Conservation Measures:

1. Inform all project personnel about the potential presence of the PR boa in areas where the proposed work will be conducted. A pre-construction meeting should be conducted to inform all project personnel about the need to avoid harming the species as well as penalties for harassing or harming PR boas. An educational poster or sign with photo or illustration of the species should be displayed at the project site.

2. Prior to any construction activity, including removal of vegetation and earth movements, the boundaries of the project and areas to be excluded and protected should be clearly marked in the project plan and in the field in order to avoid further habitat degradation into forested and conservation areas.

3. Once areas are clearly marked, and prior to the use of heavy machinery and any construction activity (including removal of vegetation and earth movement), a biologist or project personnel with experience on this species should survey the areas to be cleared to verify the presence of any PR boa within the work area.

4. If a PR boa is found within any of the working or construction areas, activities should stop at that area and information recorded (see #5). **Do not capture the boa.** If boas need to be moved out of harm's way, designated personnel shall immediately contact the Puerto Rico Department of Natural and Environmental Resources (PRDNER) Rangers for safe capture and relocation of the animal (PRDNER phone #s: (787) 724-5700, (787) 230-5550, (787) 771-1124). **If immediate relocation is not an option, project-related activities at that area must stop until the boa moves out of harm's way on its own**. Activities at other work sites, where no boas have been found after surveying the area, may continue.

5. For all boa sightings (dead or alive), record the time and date of the sighting and the specific location where it was found. PR boa data should also include a photo of the animal (dead or alive), site GPS coordinates, the time and date, and comments on how the animal was detected and its behavior.

6. If a PR boa is captured by PRDNER personnel, record the name of that person and information on where the PR boa will be taken. This information should be reported to the Service.

7. Measures should be taken to avoid and minimize PR boa casualties by heavy machinery or motor vehicles being used on site. Any heavy machinery left on site (staging) or near potential PR boa habitat (within 50 meters of potential boa habitat), needs to be thoroughly inspected each morning before work starts to ensure that no boas have sheltered within engine compartments or other areas of the equipment. If PR boas are found within vehicles or equipment, do not capture the animal, and let it move on its own or call PRDNER Rangers for safe capture and relocation of the animal (see #4). If not possible, the animal should be left alone until it leaves the vehicle on its own.

8. PR boas may seek shelter in debris piles. Measures should be taken to avoid and minimize boa casualties associated with sheltering in debris piles as a result of project activities. Debris piles should be placed far away from forested areas. Prior to moving, disposing or shredding, debris piles should be carefully inspected for the presence of boas. If debris piles will be left on site, we recommend they be placed in areas that will not be disturbed in the future.

9. If a dead PR boa is found, immediately cease all work in that area and record the information accordingly (see #5). If the PR boa was accidentally killed as part of the project actions, please include information on what conservation measures had been implemented and what actions will be taken to avoid further killings. A dead boa report should be sent by email (see contacts below) to the Service within 48 hours of the event.

10. Projects must comply with all state laws and regulations. Please contact the PRDNER for further guidance.

If you have any questions regarding the above conservation measures, please contact the Service:

- José Cruz-Burgos, Endangered Species Program Coordinator
  - Email: jose_cruz-burgos@fws.gov
  - Office phone (305) 304-1386
- Jan Zegarra, Fish and Wildlife Biologist
  - Email: jan_zegarra@fws.gov
  - Office phone (786) 933-1451

Last Revised: January 2024

Appendix K:
Farmland Protection

Farmland Classification—Arecibo Area, Puerto Rico Northern Part (PR-CRP-000771)

Address: Pueblo Ward, Arecibo, PR 00612

Coordinates: 18.471980°, -66.715910°

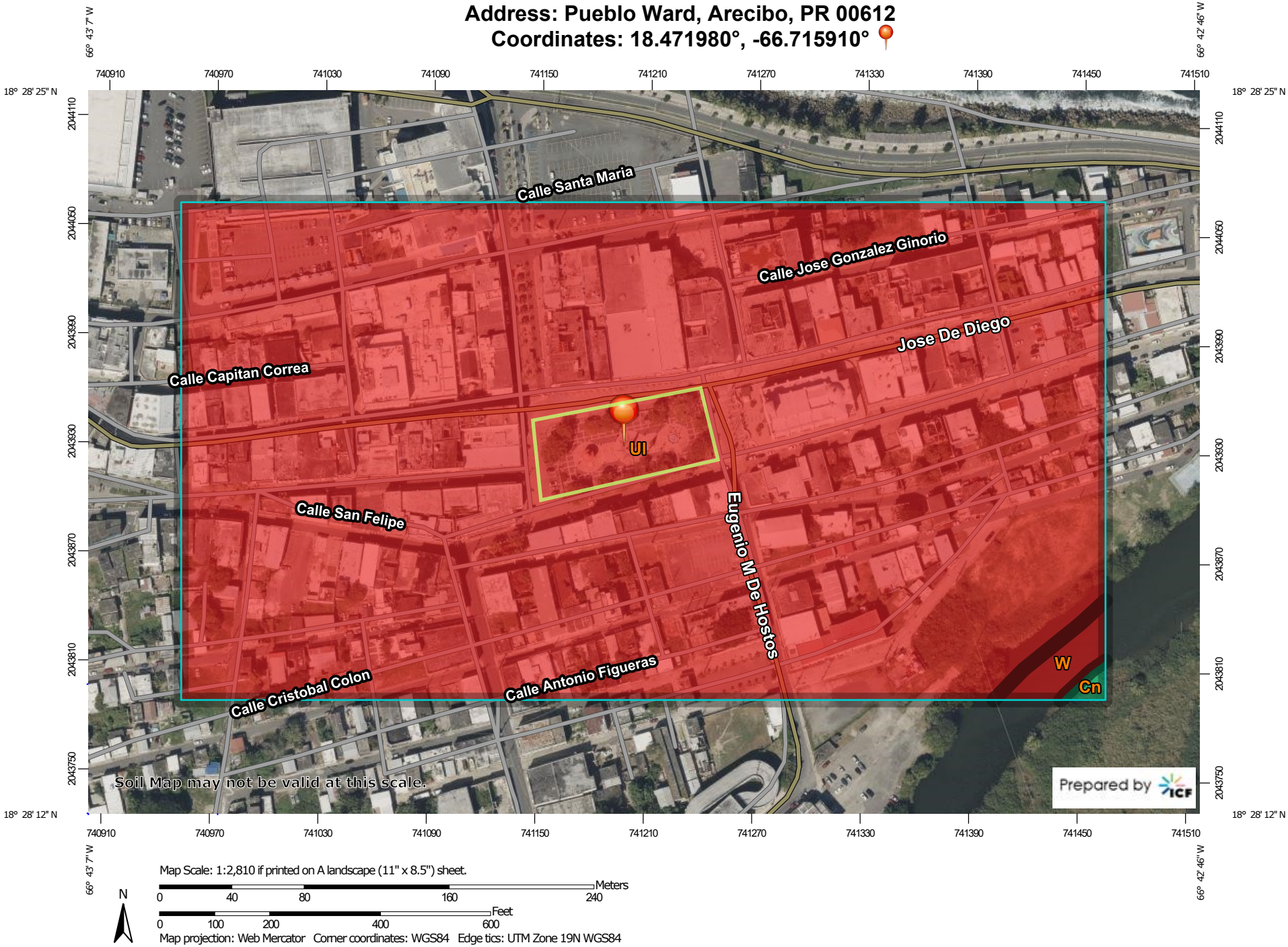

Map Scale: 1:2,810 if printed on A landscape (11" x 8.5") sheet.

N

Meters: 0 40 80 160 240

Feet: 0 100 200 400 600

Map projection: Web Mercator Corner coordinates: WGS84 Edge tics: UTM Zone 19N WGS84

MAP LEGEND

Area of Interest (AOI)

- Area of Interest (AOI)

Soils

Soil Rating Polygons

- Not prime farmland
- All areas are prime farmland
- Prime farmland if drained
- Prime farmland if protected from flooding or not frequently flooded during the growing season
- Prime farmland if irrigated
- Prime farmland if drained and either protected from flooding or not frequently flooded during the growing season
- Prime farmland if irrigated and drained
- Prime farmland if irrigated and either protected from flooding or not frequently flooded during the growing season
- Prime farmland if subsoiled, completely removing the root inhibiting soil layer
- Prime farmland if irrigated and the product of I (soil erodibility) x C (climate factor) does not exceed 60
- Prime farmland if irrigated and reclaimed of excess salts and sodium
- Farmland of statewide importance
- Farmland of statewide importance, if drained
- Farmland of statewide importance, if protected from flooding or not frequently flooded during the growing season
- Farmland of statewide importance, if irrigated
- Farmland of statewide importance, if drained and either protected from flooding or not frequently flooded during the growing season
- Farmland of statewide importance, if irrigated and drained
- Farmland of statewide importance, if irrigated and either protected from flooding or not frequently flooded during the growing season
- Farmland of statewide importance, if subsoiled, completely removing the root inhibiting soil layer
- Farmland of statewide importance, if irrigated and the product of I (soil erodibility) x C (climate factor) does not exceed 60
- Farmland of statewide importance, if irrigated and reclaimed of excess salts and sodium
- Farmland of statewide importance, if drained or either protected from flooding or not frequently flooded during the growing season
- Farmland of statewide importance, if warm enough, and either drained or either protected from flooding or not frequently flooded during the growing season
- Farmland of statewide importance, if warm enough
- Farmland of statewide importance, if thawed
- Farmland of local importance
- Farmland of local importance, if irrigated
- Farmland of unique importance
- Not rated or not available

Soil Rating Lines

- Not prime farmland
- All areas are prime farmland
- Prime farmland if drained
- Prime farmland if protected from flooding or not frequently flooded during the growing season
- Prime farmland if irrigated
- Prime farmland if drained and either protected from flooding or not frequently flooded during the growing season
- Prime farmland if irrigated and drained
- Prime farmland if irrigated and either protected from flooding or not frequently flooded during the growing season

- Prime farmland if subsoiled, completely removing the root inhibiting soil layer
- Prime farmland if irrigated and the product of I (soil erodibility) x C (climate factor) does not exceed 60
- Prime farmland if irrigated and reclaimed of excess salts and sodium
- Farmland of statewide importance
- Farmland of statewide importance, if drained
- Farmland of statewide importance, if protected from flooding or not frequently flooded during the growing season
- Farmland of statewide importance, if irrigated
- Farmland of statewide importance, if drained and either protected from flooding or not frequently flooded during the growing season
- Farmland of statewide importance, if irrigated and drained
- Farmland of statewide importance, if irrigated and either protected from flooding or not frequently flooded during the growing season
- Farmland of statewide importance, if subsoiled, completely removing the root inhibiting soil layer
- Farmland of statewide importance, if irrigated and the product of I (soil erodibility) x C (climate factor) does not exceed 60
- Farmland of statewide importance, if irrigated and reclaimed of excess salts and sodium
- Farmland of statewide importance, if drained or either protected from flooding or not frequently flooded during the growing season
- Farmland of statewide importance, if warm enough, and either drained or either protected from flooding or not frequently flooded during the growing season
- Farmland of statewide importance, if warm enough
- Farmland of statewide importance, if thawed
- Farmland of local importance
- Farmland of local importance, if irrigated
- Farmland of unique importance
- Not rated or not available

Soil Rating Points

- Not prime farmland
- All areas are prime farmland
- Prime farmland if drained
- Prime farmland if protected from flooding or not frequently flooded during the growing season
- Prime farmland if irrigated
- Prime farmland if drained and either protected from flooding or not frequently flooded during the growing season
- Prime farmland if irrigated and drained
- Prime farmland if irrigated and either protected from flooding or not frequently flooded during the growing season
- Prime farmland if subsoiled, completely removing the root inhibiting soil layer
- Prime farmland if irrigated and the product of I (soil erodibility) x C (climate factor) does not exceed 60
- Prime farmland if irrigated and reclaimed of excess salts and sodium
- Farmland of statewide importance
- Farmland of statewide importance, if drained
- Farmland of statewide importance, if protected from flooding or not frequently flooded during the growing season
- Farmland of statewide importance, if irrigated

- Farmland of statewide importance, if drained and either protected from flooding or not frequently flooded during the growing season
- Farmland of statewide importance, if irrigated and drained
- Farmland of statewide importance, if irrigated and either protected from flooding or not frequently flooded during the growing season
- Farmland of statewide importance, if subsoiled, completely removing the root inhibiting soil layer
- Farmland of statewide importance, if irrigated and the product of I (soil erodibility) x C (climate factor) does not exceed 60
- Farmland of statewide importance, if irrigated and reclaimed of excess salts and sodium
- Farmland of statewide importance, if drained or either protected from flooding or not frequently flooded during the growing season
- Farmland of statewide importance, if warm enough, and either drained or either protected from flooding or not frequently flooded during the growing season
- Farmland of statewide importance, if warm enough
- Farmland of statewide importance, if thawed
- Farmland of local importance
- Farmland of local importance, if irrigated
- Farmland of unique importance
- Not rated or not available

Water Features

- Streams and Canals

Transportation

- Rails
- Interstate Highways
- US Routes
- Major Roads
- Local Roads

Background

- Aerial Photography

The soil surveys that comprise your AOI were mapped at 1:20,000.

Warning: Soil Map may not be valid at this scale.

Enlargement of maps beyond the scale of mapping can cause misunderstanding of the detail of mapping and accuracy of soil line placement. The maps do not show the small areas of contrasting soils that could have been shown at a more detailed scale.

Please rely on the bar scale on each map sheet for map measurements.

Source of Map: Natural Resources Conservation Service
Web Soil Survey URL:
Coordinate System: Web Mercator (EPSG:3857)

Maps from the Web Soil Survey are based on the Web Mercator projection, which preserves direction and shape but distorts distance and area. A projection that preserves area, such as the Albers equal-area conic projection, should be used if more accurate calculations of distance or area are required.

This product is generated from the USDA-NRCS certified data as of the version date(s) listed below.

Soil Survey Area: Arecibo Area, Puerto Rico Northern Part
Survey Area Data: Version 20, Sep 10, 2024

Soil map units are labeled (as space allows) for map scales 1:50,000 or larger.

Date(s) aerial images were photographed: Jan 23, 2022—Mar 1, 2022

The orthophoto or other base map on which the soil lines were compiled and digitized probably differs from the background imagery displayed on these maps. As a result, some minor shifting of map unit boundaries may be evident.

Farmland Classification

Map unit symbol	Map unit name	Rating	Acres in AOI	Percent of AOI
Cn	Coloso silty clay, 0 to 2 percent slopes, occasionally flooded	Prime farmland if drained	0.1	0.2%
Ul	Urban land	Not prime farmland	34.3	98.8%
W	Water	Not prime farmland	0.4	1.0%
Totals for Area of Interest			**34.7**	**100.0%**

Description

Farmland classification identifies map units as prime farmland, farmland of statewide importance, farmland of local importance, or unique farmland. It identifies the location and extent of the soils that are best suited to food, feed, fiber, forage, and oilseed crops. NRCS policy and procedures on prime and unique farmlands are published in the "Federal Register," Vol. 43, No. 21, January 31, 1978.

Rating Options

Aggregation Method: No Aggregation Necessary

Tie-break Rule: Lower

Appendix L:
Floodplain Management

PR-CRP-000771 Advisory Base Flood Elevation (ABFE) Map

Address: Pueblo Ward, Arecibo, PR 00612
Coordinates: 18.471980°, -66.715910°

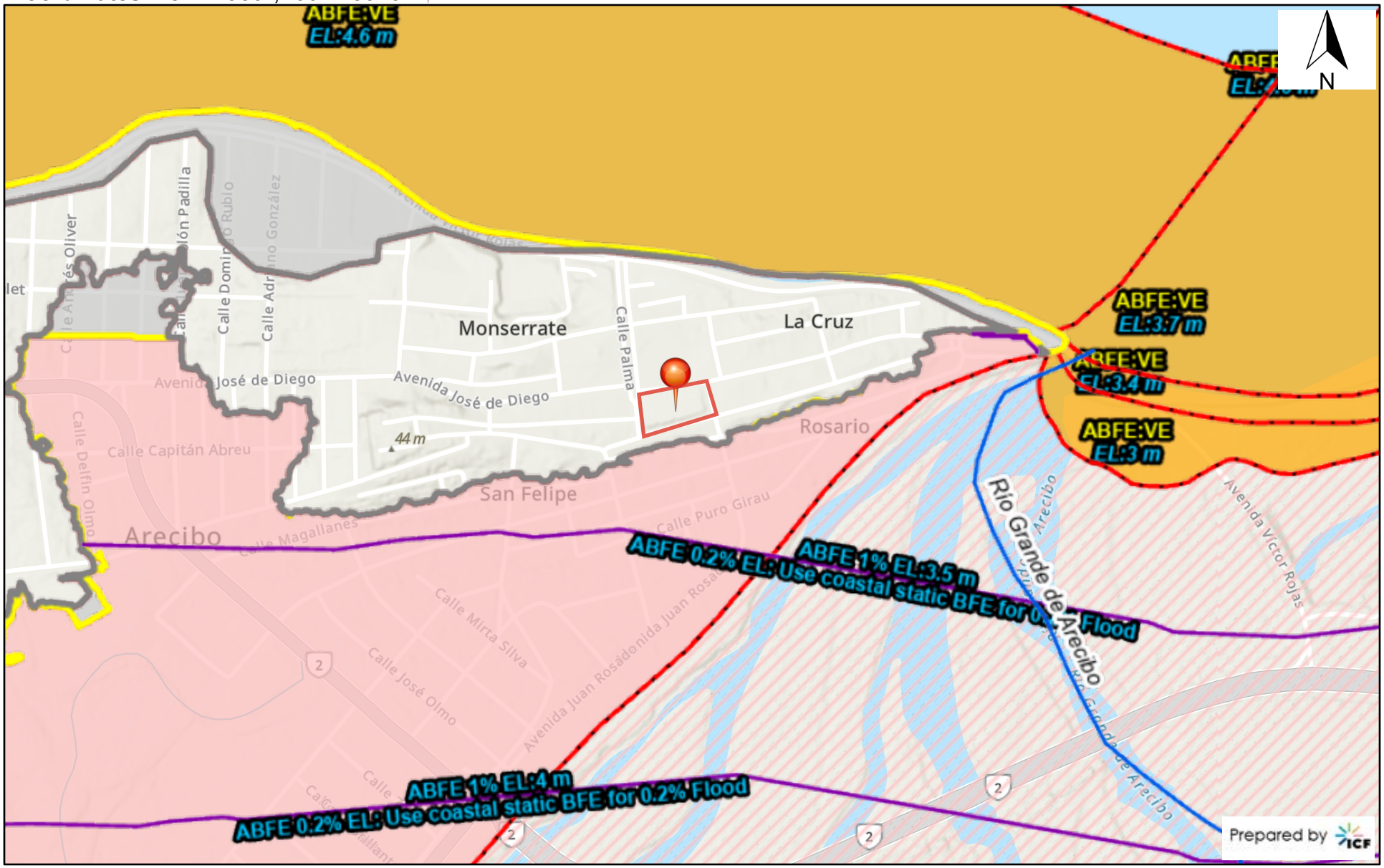

8/12/2025, 4:00:03 PM

- Streamline (zoom in to make visible)
- Advisory Base Flood Elevation (zoom in to make visible)
- Limit of Moderate Wave Action (LiMWA)

Flood Hazard Extent

- 1% Annual Chance Flood
- 0.2% Annual Chance Flood
- Zone/BFE Boundary

Flood Hazard Area (zoom in to make visible)

- A
- AO
- AE
- Coastal A Zone
- VE
- 0.2% Annual Chance Flood Zone
- A-Floodway
- AE-Floodway
- Coastal A Zone and Floodway
- World_Hillshade

1:7,667

0 0.05 0.1 0.2 mi

0 0.1 0.2 0.4 km

FEMA, Esri, NASA, NGA, USGS, Sources: Esri, TomTom, Garmin, FAO, NOAA, USGS, © OpenStreetMap contributors, and the GIS User Community

Source https://experience.arcgis.com/experience/2be181b530e74669b33e3edaafef2ebf/page/Page

Appendix M:
Historic Preservation

STATE HISTORIC
PRESERVATION
OFFICE

GOVERMENT OF PUERTO RICO

Executive Director | Carlos A. Rubio Cancela | carubio@prshpo.pr.gov

September 23, 2025

Kristin Sanders

269 Avenida Ponce de León

San Juan, PR 00917

SHPO-CF-07-18-25-02 - PR-CRP-000771 (Arecibo), Revitalization of Plaza Luis Muñoz Rivera

Dear Ms. Sanders,

We acknowledge receipt of the archaeological monitoring work plan dated August 29, 2025, for the case mentioned above. The plan is deemed acceptable, and we concur with its implementation. Please notify the PRSHPO the archaeological monitoring start date 48 hours prior to the initiation of work.

If you have any questions concerning our comments, do not hesitate to contact our Office.

Sincerely,

Carlos A. Rubio Cancela
State Historic Preservation Officer
CARC/GMO/EVR

DEPARTMENT OF
HOUSING
GOVERNMENT OF PUERTO RICO

March 24, 2025

Samir El Hage Arocho
General Partner, HORNE LLP
269 Juan Ponce de León Ave.
Hato Rey, Puerto Rico 00917-00918

Via email: samir.elhage@horne.com

RE: Authorization for Grant Management (GM) to Conduct the Required Environmental Consultations with Federal and Local Agencies on PRDOH's Behalf

Dear Mr. El Hage,

Provisions at 24 C.F.R. Part 58 establish the environmental review procedures for entities assuming the U.S. Department of Housing and Urban Development (**HUD**) environmental responsibilities under the National Environmental Policy Act (**NEPA**) and other applicable laws. The Puerto Rico Department of Housing (**PRDOH**), as the designated CDBG-DR/MIT grantee, has assumed HUD's environmental responsibilities under NEPA and related laws (**Responsible Entity**) by directly implementing multiple CDBG-DR/MIT projects.

One of the Responsible Entity's many responsibilities under 24 C.F.R. Part 58 is consulting with State, Federal, and non-federal entities in preparing an Environmental Review Record (**ERR**). Regarding a Responsible Entity's interactions with State, Federal, and non-Federal entities, 24 C.F.R. § 58.14 states that:

> *A responsible entity shall consult with appropriate environmental agencies, State, Federal and non-Federal entities and the public in the preparation of an EIS, EA or other environmental reviews undertaken under the related laws and authorities cited in § 58.5 and § 58.6. […].*

In conducting its role as a Responsible Entity that directly undertakes a project, as per 24 C.F.R. § 58.4(b)(1), PRDOH *"must assume the environmental review responsibilities for the State's activities* ***and those of any non-governmental entity that may participate in the project****."* Accordingly, a Responsible Entity may delegate certain tasks in the preparation of ERRs but retains full legal responsibility for compliance with environmental requirements.

To effectively manage available environmental resources and expedite the preparation of ERRs, PRDOH—as Responsible Entity—wishes to delegate the task of consulting with State, Federal, and non-Federal entities contained in 24 C.F.R. § 58.14. Therefore, PRDOH hereby authorizes Alberto Mercado Vargas, GM Environmental SME, or his authorized representative) to conduct on its behalf the environmental consultations with Federal and local agencies required to prepare ERRs for the implementation of CDBG-DR and CDBG-MIT projects, while still maintaining the ultimate and full legal responsibility for compliance with environmental requirements. This authorization extends to both early and formal consultations before Federal agencies such as the U.S. Fish and Wildlife Service (**USFWS**) and the State Historic Preservation Office (**SHPO**), among others required for compliance with applicable laws and regulations as established in 24 C.F.R. § 58.14 and § 58.5. GM should include and copy the PRDOH Environmental Division in all communications with Federal and local agencies for these purposes.

PRDOH appreciates GM's commitment to Puerto Rico's recovery and is confident in its ability to execute this task effectively. Please feel free to contact me with any questions.

Sincerely,

Ciary Pérez Peña
Secretary
Puerto Rico Department of Housing

Cc. Alberto Mercado Vargas
GM Environmental SME
alberto.mercadovargas@horne.com

September 12, 2025

Carlos A. Rubio Cancela
State Historic Preservation Officer
Puerto Rico State Historic Preservation Office
Cuartel de Ballajá (Tercer Piso)
San Juan, PR 00902-3935

Puerto Rico Disaster Recovery, CDBG-DR City Revitalization (City-Rev) Program

Re: SHPO-CF-07-18-25-02/PR-CRP-000771, Revitalization of Plaza Luis Muñoz Rivera in the Urban Center, Arecibo, Puerto Rico – Archaeology Monitoring Work Plan Submission

Dear Architect Rubio Cancela,

On behalf of the Puerto Rico Department of Housing (PRDOH), we thank you for your letter dated August 14, 2025, in response to the submission of documentation for PR-CRP-000771, Revitalization of Plaza Luis Muñoz Rivera project. The letter stated your concurred with the finding that "the proposed project, with the established conditions, no adverse effect upon PR-CRP-000771 Arecibo:

1. Alternative 3 was chosen for the new fountain pumps and electrical control room as discussed during the January 21, 2025, meeting between the Municipality, GM, and PM.
2. To address any potential impacts to archaeological resources within the Direct APE, archaeological monitoring by an SOI-Qualified archaeologist is required for all work requiring ground disturbance such as excavation and demolition. An archaeological monitoring plan shall be submitted by an SOI-Qualified archaeologist to the PRSHPO and approved prior to any work being performed.

3. To avoid damage to architectural historic properties, a special barrier must be constructed to protect the "Pluma de Muñoz Rivera monolith statue" during construction.
4. To avoid damage to architectural objects, specific handling instructions must be added to the technical specifications of the project, for the restoration, transportation and installation of the Reina Isabel II and the two Lion Statues."

As such, we are submitting the requested Archaeological Monitoring Plan prepared by Archaeologist Dylan Zedaker and reviewed by Archaeologist Karen Anderson-Córdova. We are requesting your review of the prepared plan and concurrence that the implementation of the plan is appropriate for the undertaking.

Please contact me with any questions or concerns by email at kristin.sanders@horne.com or phone at 225-276-2109.

Kindest regards,

Kristin P. Sanders

Kristin P. Sanders
Historic Preservation Manager

Attachments

CITY REVITALIZATION PROGRAM

ICF

DEPARTMENT OF HOUSING
GOVERNMENT OF PUERTO RICO

PR-CRP-000771

Archaeological Monitoring Plan

Revitalization of Plaza Luis Muñoz Rivera in the Urban Center of Arecibo
Arecibo, PR

SHPO-CF-07-18-25-02

Submitted to:
PR State Historic Preservation Office

Prepared By:
Dylan Zedaker, MA
Archaeologist – ICF

Reviewed By:
Karen Anderson-Córdova, PhD
Archaeologist – HCC for ICF

Date:
August 29, 2025

Table of Contents

Preamble **3**

Description and Development of Arecibo TUC **5**

Description of Proposed Project **7**

Ground Disturbing Activities 7

Archaeological Evaluation and Monitoring Procedure **18**

Before Construction Begins 20

During Demolition and Construction 21

After Construction Ends 19

Human Remains 20

Summary of Anticipated Products **26**

Professional Qualifications **26**

References **27**

Appendices **28**

Appendix A: SHPO Concurrence Letter 28

Appendix B: Monitoring Daily Activity Sheet 30

Appendix C: 90 Percent Design Plans 27

Table of Figures

Figure 1. APE Overview 4

Figure 2. Proposed Site Plan 8

Figure 3. Demolition Plan 9

Figure 4. KNOWN ARCHAEOLOGICAL SITES WITHIN THE DIRECT APE 13

Preamble

The Municipality of Arecibo is seeking Community Development Block Grant Disaster Recovery (CDBG-DR) funds financed by the federal Department of Housing and Urban Development due to damage received by the 2017 Hurricanes Irma and María. The Puerto Rico Department of Housing (PRDOH) has established an Agreement between PRDOH and the Municipality of Arecibo for the City Revitalization Program (CRP) as part of the CDBG-DR.

Due to damage as a result of Hurricanes Irma and María, the Arecibo Municipality proposes to renovate the existing *Plaza*[1] (Figure 1). The project also includes the sidewalk located to the east of the *Plaza* in front of the San Felipe Apóstol Cathedral between José de Diego Avenue and Gonzalo Marín Street, as well as the sidewalk located to the west side of Calle Palma between José de Diego Avenue and Gonzalo Marín Street.

A formal consultation with the Puerto Rico State Historic Preservation Office (PRSHPO) was prepared for the project in compliance with Stipulation II.A.4 of the Section 106 Programmatic Agreement[2] (PA) as amended in the form of an Effect Determination Form (EDF). PRSHPO, in a letter dated August 14, 2025, concurred with a finding of No Adverse Effect for this undertaking provided the condition to implement an archaeological monitoring plan during ground-disturbing activities including demolition and construction (see Appendix A).

This monitoring plan is based on the Archaeological Monitoring Work Plan Template developed by Archaeologist Sharon Meléndez Ortiz, Horne PR, 2023. The information in this document contains a summary of the information presented in the NHPA Section 106 EDF entitled Revitalization of Plaza Luis Muñoz Rivera in the Urban Center of Arecibo by ICF (2025).

The Program has determined that the direct APE for this improvement project consists of the *Plaza* which occupies an irregular rectangular shaped polygon with the Direct APE measuring approximately 272 feet 6 inches east to west at the center and measuring approximately 127 feet 6 inches north to south on the west side and 111 feet 6 inches on the east side. The area of the *Plaza* is approximately 32,340.5 square feet (3,005.62 square meters), and the area of the sidewalk to the west and east of the *Plaza* is approximately 6,334.0 square feet (588.66 square meters), which brings the total area of the Direct APE to approximately 38,674.5 feet (3,594.28 square meters). Additionally, the staging area is considered part of the Direct APE, and it is located within the boundary of the *Plaza* on the northwest side (see Figure 1).

[1] Note: For consistency, when referring to the existing configuration of the plaza, the term is capitalized and italicized (*Plaza*). When referring to "plaza" as a type, or earlier configurations to Arecibo's town plaza over time, the term is not bolded, not capitalized, and not italicized.
[2] An addendum to the FEMA prototype PA was completed to include the PRDOH and CDBG-DR program (FEMA 2019).

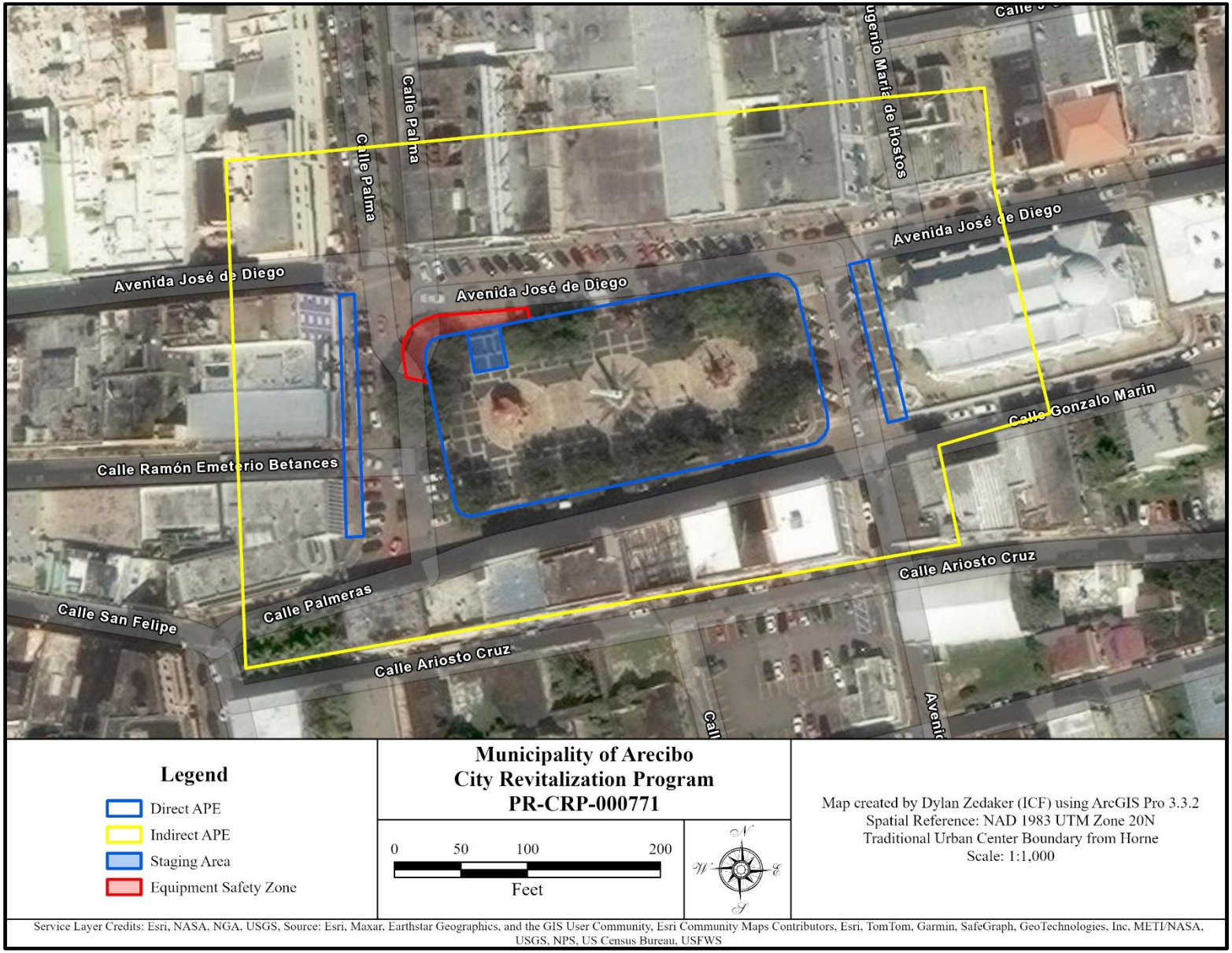

Figure 1. APE Overview

The plan is consistent with the Secretary of the Interior's (SOI) Guidelines for Archeological Documentation, the Advisory Council on Historic Preservation's (ACHP) recommendations on the recovery of significant information from archaeological sites, PR Regulation #8932 of the Council for Protection of the Puerto Rico Terrestrial Patrimony and PR Regulation #9233 of the OGPe (Puerto Rico Permits Management Office). The monitoring plan was prepared by archaeologist Dylan Zedaker, MA with ICF. A technical review of the monitoring plan was performed by archaeologist Karen Anderson-Córdova, PhD with Historical Compliance Consulting. Both archaeologists exceed the requirements set forth in 36 CFR Part 61.

Description and Development of Arecibo TUC

The APE is located within the Arecibo TUC, and to better understand the historic development of the TUC, historic map research was performed for the Section 106 Effects Determination Form (EDF). The historic aerials used in this analysis are from 1931, 1950, and 1972 and were obtained from The Puerto Rico Department of Transportation and Public Works (DTOP 2025) and the United States Geological Service (USGS) Earth Explorer (USGS 2025) historic aerial image databases. The information in this section contains a summary of the information presented in the NHPA Section 106 EDF entitled Revitalization of Plaza Luis Muñoz Rivera in the Urban Center of Arecibo by ICF (2025).

The earliest available historic aerial image of the Direct APE is from 1931 and shows a different version of the plaza within the Direct APE that contains eight planting areas in two rows of four that trend east to west. This is in stark contrast to the next available historic aerial image of the Direct APE from 1950 that shows a heavily altered plaza that corresponds to the current configuration. This configuration includes the gazebo, obelisk, and fountain located in a row down the center of the plaza east to west, respectively. Additionally, there are four rectangular planter sections in each corner, and two elongated planter sections in the northern and southern portions of the plaza. The next available historic aerial image of the Direct APE is from 1972. This image shows no visible difference from the 1950 aerial aside from the fact that fully grown trees exist in the planters that were constructed, which obscure any details of the plaza below.

<u>20th Century Town Plaza and its Urban Context</u>

The most relevant transformation the town plaza underwent during the 20th century was the creation of parking spaces along the north side (José de Diego Avenue). During the second half of the 20th century, crowded municipalities interpreted their plazas as a solution to the many traffic issues historic urban cores encountered. Not only were these cores not designed for cars, but population growth impacted them in dramatic fashion. A most unfortunate adverse effect was caused to the Río Piedras iteration (Plaza de la Convalecencia) where underground parking was constructed during the 1970s. In addition to the inherent danger presented by an underground car park, the insertion dramatically impacted in a negative and

irreversible manner the plaza character. In Arecibo, the parking spaces appear by the late 1950s.

Three Contributing Elements of the *Plaza*

While we can classify some designs as ephemeral since they do not provide the character-defining features of a Puerto Rican town plaza, there may be cases when such transformations do become contributing components of a plaza.

The Park-like Atmosphere

During the 19th century, the Arecibo town plaza transformed into a park where trees provided shade for users. Benches presented additional comfort. Rather than a transitional place to the church or a functional locale like a market, this transformation marks a character-defining element since greenery – particularly certain trees – are now considered an essential component of the plaza. In other words, by the 19th century, the recreational aspect of the *Plaza* had become of primary relevance.

The Obelisk

The unusual obelisk gracing the *Plaza* was placed *in situ* when the name was changed to Luis Muñoz Rivera (1859-1916) during the first half of the 20th century may also be considered a character-defining element. A poet, journalist and politician,[3] the obelisk was meant to be interpreted as a commemoration in his memory. Some pose it is meant to represent his pen in the manner of the pen is mightier than the sword. This is an interesting interpretation since obelisks are associated with Egypt, and they are considered stone representations of rays of sun. (The sun, known as Ra or Re, was adored as the most important deity of the Egyptian pantheon.) In the case of Arecibo, it is possible the inspiration came from the many obelisks that adorn Europe. Since they have become symbols of perpetuity it is appropriate Muñoz was honored in this manner. The object's geometry, its height, and exotic symbolism should be considered a contributing element of the *Plaza*. The obelisk falls into the NRHP category of object.

The Isabel II Sculpture

A third character-defining element of the *Plaza* is the Isabel II (1830-1904) sculpture. Her short presence at the *Plaza* is dated to have started in 1861 when one Architect Bartoli organized her placement. The replica of the standing sovereign was accompanied by two lions. Known as "Isabel *la de los tristes destinos*" (Isabel, the Unlucky), the queen was forced to leave Spain for France in 1868. Two years later she was forced to abdicate in favor of her son. Whether or not she deserves historical recognition, the sculpture is associated with the *Plaza* and could be understood as a character-defining element of this site. The Isabel II sculpture falls into the

[3] Muñoz Rivera's most important gift to Puerto Rican culture was his son, Luis Muñoz Marín (1898-1980), poet, journalist and politician, as well as Puerto Rico's first elected governor.

NRHP category of object.

Description of Proposed Scope of Work (SOW)

This project is located within the Arecibo TUC– as established by the Puerto Rico State Historic Preservation Office (PRSHPO) – and the Direct APE consists of the parcel boundary of the *Plaza* and the sidewalk located to the east of the *Plaza* in front of the San Felipe Apóstol cathedral between José de Diego Avenue and Gonzalo Marín street, as well as the sidewalk located to the west side of Calle Palma between José de Diego Avenue and Gonzalo Marín street (see Figure 1).

The *Plaza* is within the Arecibo TUC and serves as a gathering point, area for leisure and recreation, a distribution center, outdoor activity area, art and cultural space, music venue, religious activities' space and overall, an open space for our citizens and visitors. The *Plaza* is owned by the Municipality of Arecibo and the municipality's goal is to renovate and improve this public facility after hurricanes Irma and Maria severely damaged the infrastructure. The *Plaza* has received funds from FEMA under Project No. 108510 ("proyecto mejorado"), but the new SOW of this CRP project does not duplicate FEMA's SOW. All proposed activities that are part of this undertaking are outlined below with the approximate area, amount of subsurface impact, and the specific SOW for each activity. The existing *Plaza* layout is outlined on the general site plan on page 3 of the design plans (Figure 2).

(1) Plaza Floor Materials

The approximate *Plaza* area is 35,000 square feet. The work will not require excavation below the existing *Plaza* grade. The scope of work includes removing the existing *Plaza* flooring and installing new flooring tiles that comply with the Americans with Disabilities Act (ADA). The new *Plaza* flooring will be designed to withstand vehicular traffic from service vehicles and equipment. The Municipality required the *Plaza* to be accessible to maintenance vehicles so that it can function as a venue for public events.

(2) Plaza Benches

The total quantity of benches to be added is twenty-three (23) and they will not require excavation below the existing *Plaza* grade. The existing metal park benches will be replaced with more durable and resilient seating.

(3) Ramp and Stairs

The work will not require excavation below the existing *Plaza* grade. The scope of work includes improving the existing ramps and stairs to comply with ADA and safety standards. The improvements will include adding new non-slip floor tiles, safety bull-nose edging, new ADA-compliant pipe railings, and signage.

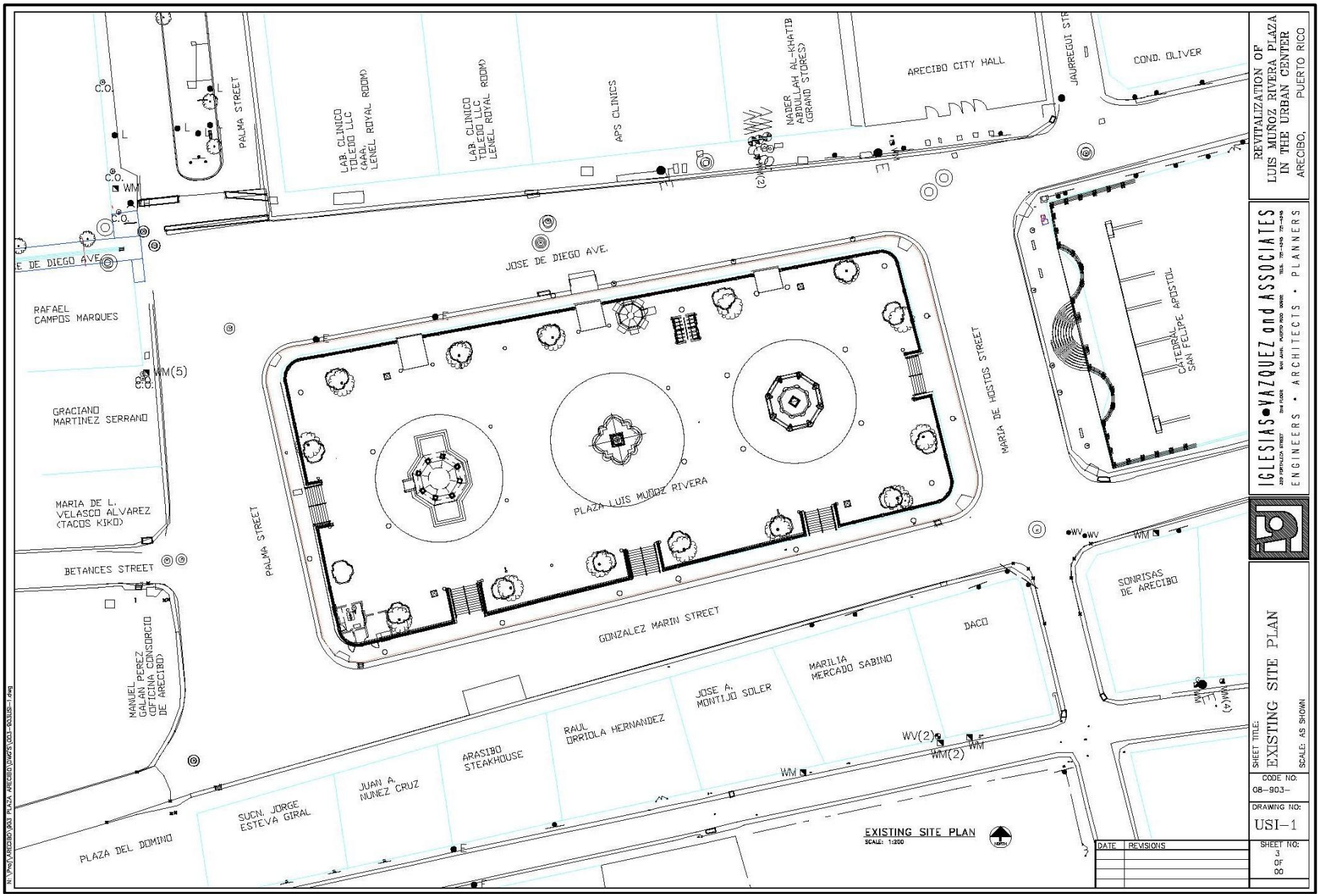

Figure 2. Site Plan

(4) Lighting

Lighting improvements consists of new poles and lights totaling 32 inside the plaza and 12 outside of the plaza. The new lights need feeder pipes, which will require an excavation of 12 inches below the existing *Plaza* grade. This will replace lighting poles and lamps with resilient, power-efficient lighting. Some solar lighting will be considered, but it will not be the main lighting system. The bases and electrical piping for the new lights will not impact deeper than 18" below the existing planting grade levels.

(5) Landscaping Work

The approximate area is 4,800 square feet, and the new planting areas will require an excavation of 18" below the existing grade. The existing green planting areas will be expanded in size (approximately 300 square feet each). New decorative surface landscaping will be included at some planters.

(6) Fountain

The approximate area is 1,020 square feet, and the fountain will require an excavation of 18" below the existing grade. The scope of work is to rebuild and improve the Plaza fountain with the installation of a synchronized lighting system and new pumps and water jets. The location of the existing pumps will be discussed in detail next.

(7) Fountain Pumps and Electrical Controls

The new footings, electrical, and mechanical piping will require an excavation of 12 inches below the existing *Plaza* grade. This part of the project required a larger amount of design considerations and changes because of the difficulty in finding a suitable location for the Plaza's electrical panels and the fountain pumps and equipment, which complied with the project guidelines and the historical nature of the site. To reach a final decision, several design alternatives were presented to the project manager.

Alternative 3 consisted of locating the proposed electrical and mechanical room on the southwest corner of the plaza, above the existing mechanical room. This alternative would require raising the ceiling of the existing mechanical room to the minimum required by the current building code (7 ft). The increased ceiling of the mechanical room would project into the plaza, with height below the precast railing and hidden with vegetation (live Spanish laurel hedge); a bench would surround the new volume.

(8) Removal of the Existing Octagonal Gazebo

The work will not require excavation below the existing *Plaza* grade. The existing octagonal gazebo will be removed to create an open area where a movable (temporary) stage and other venue equipment can be installed for such events as the "Fiestas Patronales". This area will also serve as a large gathering space for activities not requiring such equipment. Electrical,

water, and other "rough-in" will be provided.

The removal of the existing gazebo would not affect the historic character of the *Plaza* because it was constructed in 1990, and its location at the west side of the *Plaza* is not consistent with the original central location of the ca. 1898 gazebo.

Military and public gatherings are a tradition inherited from the Spanish social context and were altered by the 1898, 1959 and 1990 renovations. The remodeling ca. 1959 did not provide a large gathering space. Instead, the spaces for gatherings were occupied by two fountains. As a result, the smaller eastern fountain was usually covered with a temporary wooden platform to provide space for a stage. Finally, a concrete open stage with an "acoustic conch shell roof" was designed by local engineer Andrés Hernández and installed ca. 1965 at the east side of the *Plaza*.

The "conch building" highly deteriorated the visual integrity of the plaza by creating a visual obstruction of the view of the cathedral to the east. It was finally removed by the remodeling of 1990 by IVA and substituted by a fountain. The only remaining space (to the west) was occupied by the new octagonal gazebo. However, no large open space was provided. As a solution, a wooden platform was constructed on the east side of the gazebo to host public events.

The demolition of the gazebo will not require excavations, because the existing floor level of the gazebo is raised 18" above the *Plaza* level, and the existing column footings that penetrate the ground will be left in place. All new footings, primary and secondary cabling, and "rough-in" will be installed at 12" maximum depth below the existing Plaza level. Considering that the existing *Plaza* floor concrete slab has a thickness of 6" and the existing compacted sub-base is about 8" minimum, this provides enough space as not to affect any potentially intact cultural deposits below the fill layers.

(9) Trash Cans and Urban Accessories

There will be approximately 12 new trash cans added to the *Plaza*. The work will not require excavation below the existing *Plaza* grade. New and larger trash cans with bodies made of pre-cast concrete will be installed on the north and south sides of the *Plaza*. The new QR code plates with access to historical information, as provided by the Municipality Cultural Office. These small weather-resistant plates will be installed at the entrances to the *Plaza* and at three strategic locations: the fountain, the obelisk, and the Reina Isabel II sculpture.

(10) Reina Isabel II Statue

The area of the Reina Isabel II Statue is approximately 350 square feet. The new footings will require 18" of excavation below the existing *Plaza* grade. The original Reina Isabel II and the

lying lion sculptures will be restored and installed at the western side of the *Plaza* in a concrete and marble base surrounded by a garden. Originally, the sculpture was located at the center of the *Plaza* where the Luis Muñoz Obelisk is now located.

(11) Fence/ Railing

The length of the fence/ railing is approximately 350 feet. The existing concrete and steel fence/ railing surrounding the *Plaza* is very deteriorated and will be removed. The existing metal decorative panels will be salvaged and stored by the Municipality. A new precast concrete coping railing will be installed, using a design depicting the form and features of the Art Deco design of 1979, to replicate its appearance. The new railing will rest over the existing footings/walls and will require 12 inches of excavation below the existing *Plaza* grade.

(12) Obelisk

The area of the Obelisk is approximately 300 square feet. No excavation will be required below the existing *Plaza* grade. The existing planting and low wall surrounding the central obelisk will be maintained as it is the only element remaining from the *Plaza* designs of 1979. A plaque with historical information prepared by the Municipality Cultural Office will be installed. Penetration of the plaque base will be less than 12" below the *Plaza* level. The original concrete vases that surround this planting will not be recovered, as they are now located on private property.

(13) Tables and Chairs

The area for tables and chairs is approximately 300 square feet. No excavation will be required below the existing *Plaza* grade. Eight small prefabricated permanent tables and chairs will be installed in the designated areas around the *Plaza* to provide seating. The tables will be provided with domino/ chess boards.

(14) Electrical, Communications, and Plumbing

The electrical, communications, and plumbing infrastructure will require 18 inches of excavation below the existing *Plaza* grade. The existing electrical, communications, Wi-Fi, plumbing, and drainage infrastructure will be improved and/or totally changed when not in compliance with the code or if it is totally damaged.

The improvements will consist of the several activities outlined below. New electrical systems will be installed: transformers, panels, primary and secondary conduits, and cables. A new secondary safety switching, timer, and computer control panel located at the new mechanical room building will feed the fountain pumps, lights, and the plaza pole-mounted and decorative LED lights. The new secondary distribution piping will be buried no more than 12" beneath the existing *Plaza* level. The existing potable water distribution system will be abandoned in situ as it has many leaks. A new potable water piping and distribution system

will be installed. All new piping will be buried no more than 12" beneath the existing *Plaza* level. The existing surface-level storm drainage will remain, but the slope of some areas will be improved so that water will flow more efficiently.

Ground Disturbing Activities

Three types of ground disturbing activities are outlined in the design plan with construction activities classified as either a demolition activity, repair/rehabilitation activity or a construction activity. The extent of ground disturbance for all specific activities is outlined below (Table 1). The demolition plans for the Plaza floor, fountain, gazebo, electrical distribution, and plumbing distribution are outlined in the design plans and included (Figures 3-7). The only activities that require ground disturbance are demolition and new construction activities. The extent of ground disturbance is outlined in both feet (ft) and inches (in) and in meters (m).

Additional ground-disturbing activities include the general movement of heavy machinery within the APE during construction, movement and storage of construction materials at the staging area, and any other activity that has the potential to displace soil or cause an adverse effect to historic properties or potential NRHP-eligible properties.

Table 1. Proposed Project Activities and Estimated Ground Disturbance

Activity	Description	Estimated Depth of Ground Disturbance
Demolition	Demolition of existing *Plaza floor*	No ground disturbance below *Plaza* grade
	Demolition of Gazebo	No ground disturbance below *Plaza* grade
Repair/ Rehabilitation	Improvement of the existing ramps and stairs	No ground disturbance below *Plaza* grade
New Construction	Installation of new *Plaza* benches	No ground disturbance below *Plaza* grade
	Installation of new trash cans	No ground disturbance below *Plaza* grade
	Installation of new tables and chairs	No ground disturbance below *Plaza* grade
	Abandonment of existing potable water piping system	No ground disturbance below *Plaza* grade
	Excavation for light feeder pipe	1 ft (0.30 m)
	Excavation for light base	1.5 ft (0.45 m)
	Excavation for expanded green planting area and new decorate surface landscaping	1.5 ft (0.45 m)
	Excavation for fountain footings, electrical, and mechanical piping	1 ft (0.30 m)
	Excavation for the Reina Isabel II Statue new footings	1.5 ft (0.45 m)
	Excavation for new fence/railing footings	1 ft (0.30 m)
	Excavation for new secondary electrical system	1 ft (0.30 m)
	Excavation for new existing potable water piping system	1 ft (0.30 m)

In general, proposed construction activities have less than two feet of ground disturbance and are within the previous extent of ground disturbance. The exception is the proposed excavation for expanded green planting areas, which based on previous archaeological survey, may contain historic artifacts and previous iterations of underlying pavements.

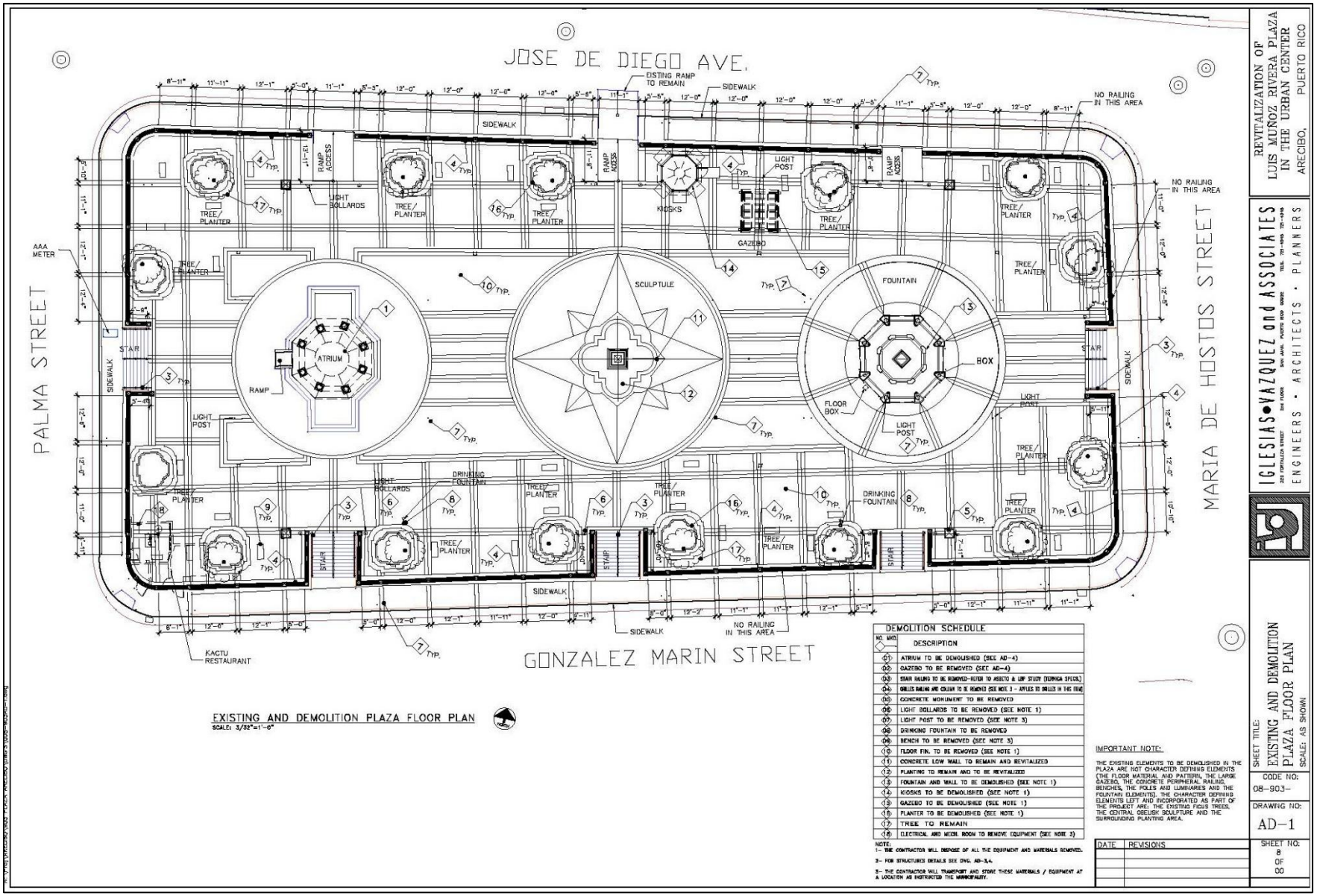

Figure 3. *Plaza* floor Demolition Plan

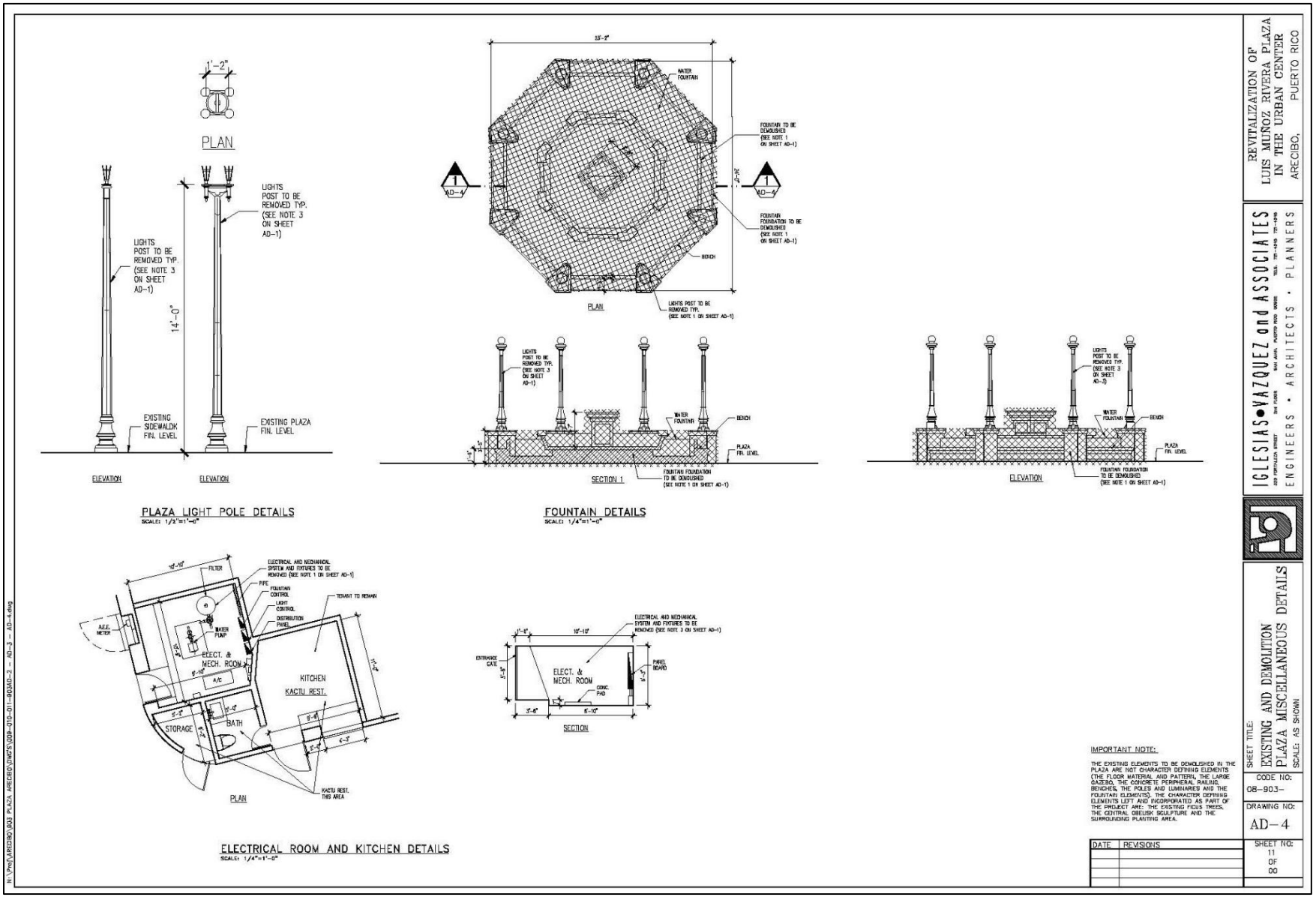

Figure 4. Fountain Demolition Plan

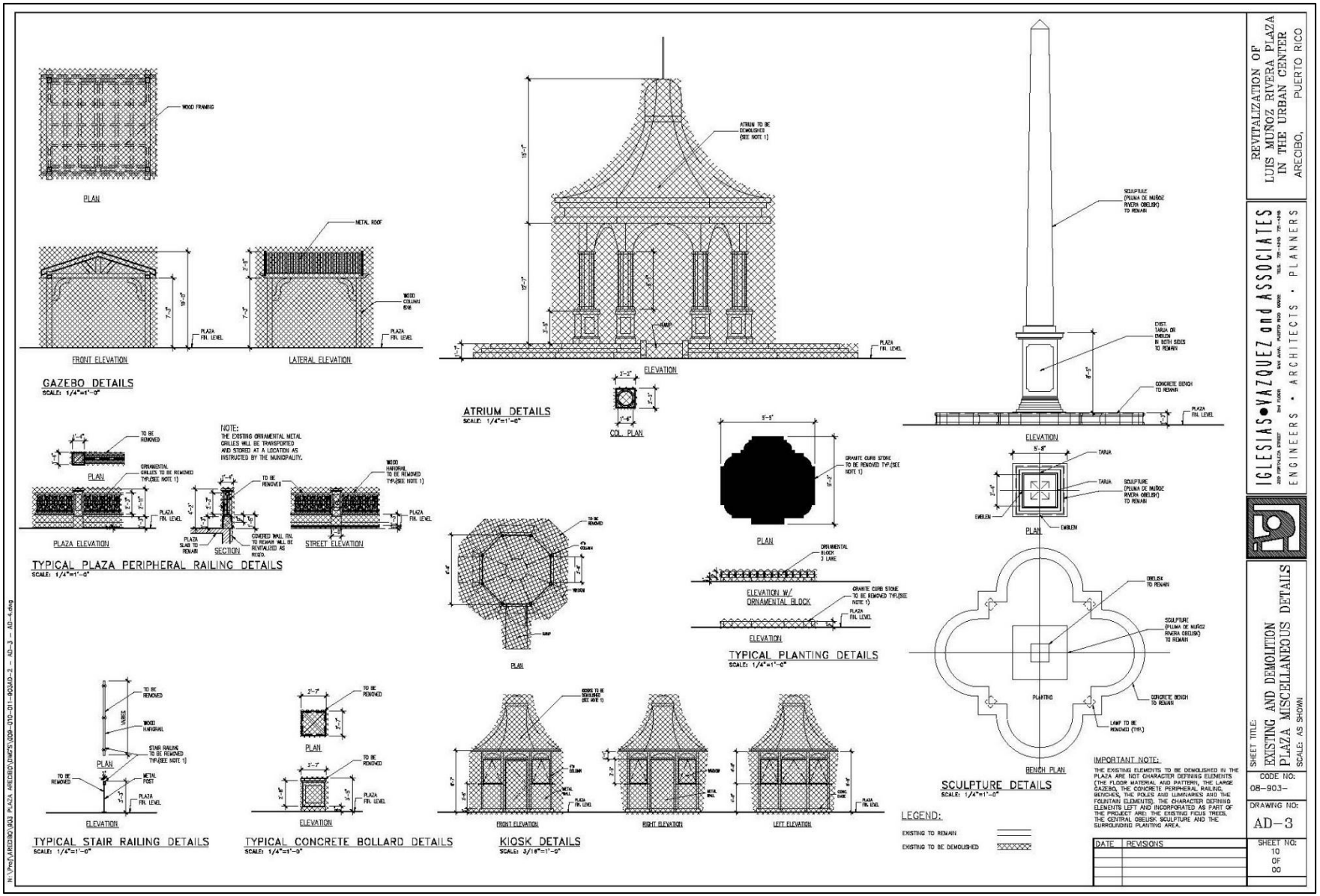

Figure 5. Gazebo Demolition Plan

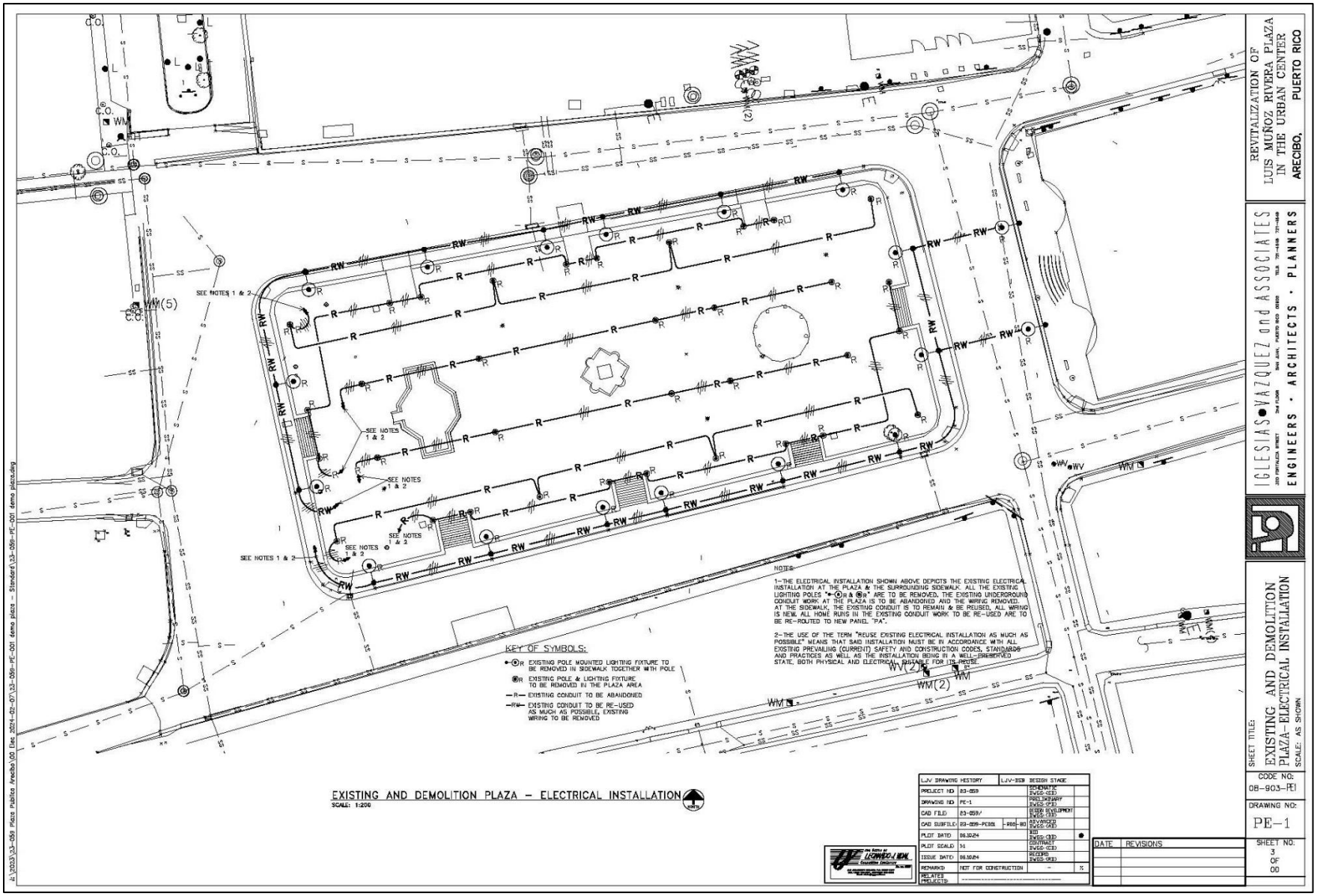

Figure 6. Electrical Demolition Plan

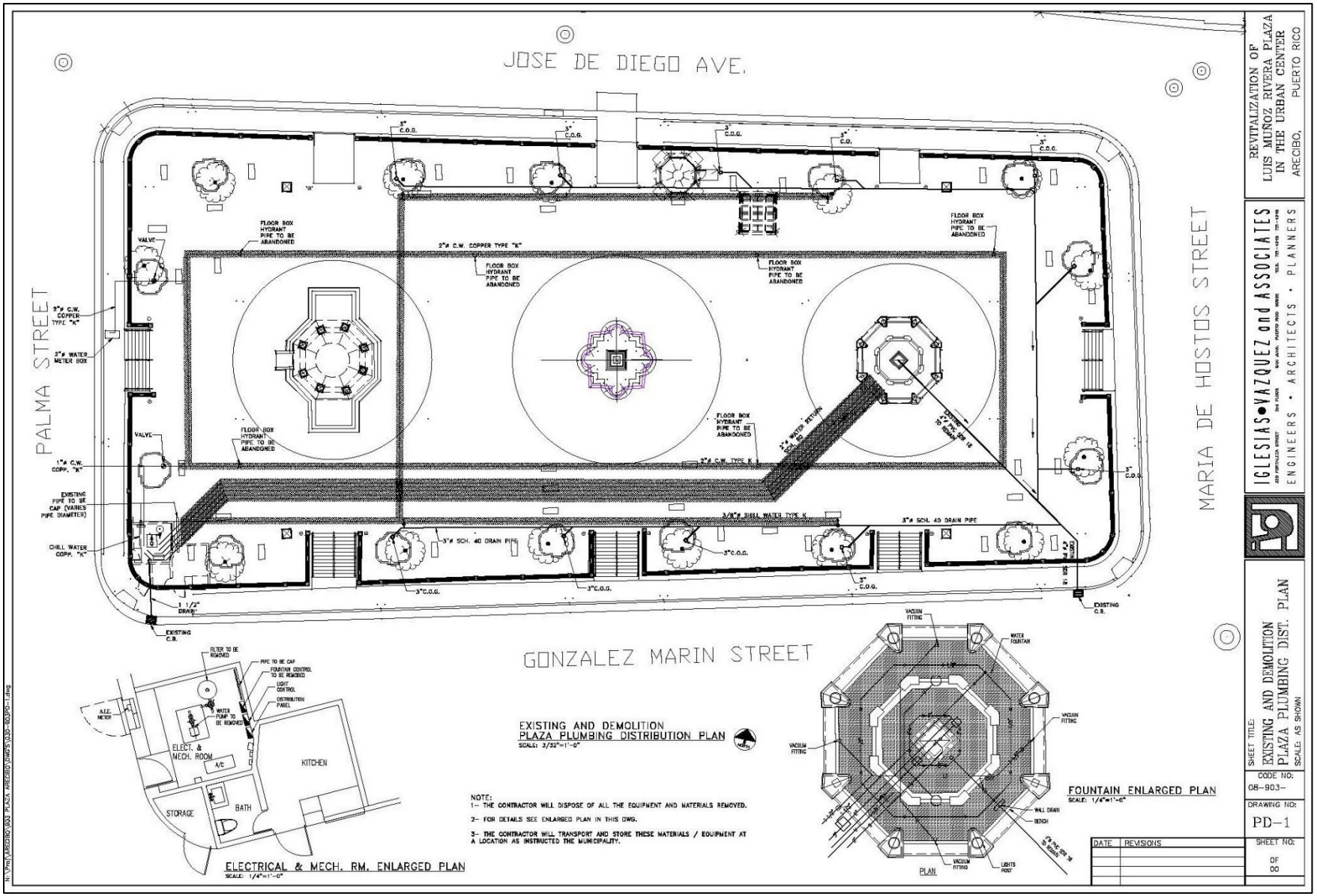

Figure 7. Plumbing Distribution Demolition Plan

Archaeological Evaluation and Monitoring Procedure

The objectives of this archaeological monitoring plan are: (1) to establish measures to prevent direct adverse effects on historic properties; (2) to establish the protocol to be followed by the monitor and construction crew before, during, and after construction; (3) to establish the protocol to be followed in the event of an inadvertent discovery of archaeological resources; (4) to establish the protocol to be followed in the event of an inadvertent discovery of human remains; (5) to outline the documentation required and relevant timelines for deliverables; and lastly (6) to ensure the protection of cultural resources throughout the proposed scope of work. The monitoring activities are divided into three groups: activities before the project begins, activities during construction, and post-construction activities. Monitoring is limited to ground-disturbing activities such as the demolition and new construction activities defined in the previous section and the design plans. Those activities that do not require ground disturbance do not require an archaeological monitor. The monitor shall not defer their monitoring responsibilities to any other person who does not meet the minimum professional qualifications outlined in the Professional Qualifications section.

The background research on historic properties performed as part of the Section 106 EDF identified that the *Plaza* is a historic archaeological resource within the APE that has been subjected to systematic archaeological survey. The resource is Plaza Luis Muñoz Rivera (SHPO# AR0100065, IPRC# AR-48-C), and it will be discussed below in terms of the spatial location in relation to the APE and the types of expected artifacts.

<u>Plaza Luis Muñoz Rivera</u>

Plaza Luis Muñoz Rivera (SHPO# AR0100065, IPRC# AR-48-C) was the subject of the archaeological study SHPO# 08-09-91-03 by María A. Cashion Lugo, which is the main source of information on the subsurface integrity of the plaza. The archaeological study consisted of 10 shovel test pits (STPs) within the northern and southern planter boxes. Three of the STPS were positive for historic materials including historic ceramics, faunal remains, construction materials, brick fragments, glass, and an intact mortar floor. The mortar floor is suggested to be an older version of the plaza floor pavement that is intact in the northern planter. Additionally, the report concluded that the soils underlying the fountain, obelisk, and structure in the middle of the plaza were largely disturbed from previous construction, despite not being able to excavate due to the current floor of the *Plaza*. The southern planter boxes contained entirely anthropogenic fill soils with a concrete floor, along with a room below the southwestern section of the *Plaza's* floor.

In addition to the documented historic *Plaza*, there are considerations for the presence of human remains (historic and prehistoric) throughout the entirety of the Arecibo TUC. Numerous archaeological studies have encountered and documented human remains during subsurface testing of the site. An early excavation of El Caney was performed by José R. Oliver Aresti in his unpublished manuscript "*Contributions to the history of Arecibo: the "foundation" or "non-foundation" of Arecibo"* from December 1951. The study aimed to determine the geospatial location and temporal/ cultural affiliations of El Caney's inhabitants. To answer these research questions, excavations were performed around the eastern portion of the Arecibo TUC and due to the large volume of urban pavements that blocked excavation, access to recently emptied lots were leveraged to test subsurface soils. AR-I located at #23 José de Diego Avenue, AR-III located at #57 José de Diego Avenue and #58 José de Diego Avenue, and AR-IV located at today's Plaza del Fuerte encountered human remains during excavation. According to Aresti, AR-I identified Taino burials that represented a Taino Necropolis; AR-III identified both historic and prehistoric burials and confirmed the location of the Cemetery of the Hermitage of San Felipe; and AR-IV identified prehistoric Taino burials.

Additional studies relevant to the discussion of potential for human remains within the TUC were excavations performed at the Cancha Lincoln Basketball Court in 1991, 1992, and 1993 by Harry E. Alemán Crespo, Jaime G. Vélez, and María A. Cashion Lugo, and Juan González Colón (SHPO #04-22-91-01). During the Phase II archaeological survey, human burials were encountered in units 5 and 6 resulting in the end of construction of the new basketball court. These burials were found ranging in depths from 0.60 m below surface to 2.10 m below surface. Of note is that the burials were recovered in-situ and fully articulated. The underlying soil taphonomy is well-suited for the preservation of bone resulting in the increased possibility of encountering human remains throughout the TUC.

Archaeological Evaluation

It is important to distinguish between the treatment of expected finds (for which the plan is being implemented) and historically significant archaeological resources. Expected finds for this project include artifacts previously documented within the soil underlying the APE such as historic ceramics, faunal remains, construction materials, brick fragments, glass. Additionally, previous iterations of the modern Plaza floor and sidewalks will be treated as expected finds. If encountered, expected finds will be documented immediately and then follow the course of the project without triggering consultation with PRSHPO. The documentation of expected finds shall include a description of the discovery, location, horizontal and vertical extent (if known), context, photographs, and drawings including a site plan.

Historically significant archaeological resources for this project include the discovery of an unknown prehistoric site, complex structures, remains of unknown household structures and their associated middens or stratified deposits underlying the existing pavements will be treated as historically significant resources. Examples of these may include prehistoric deposits related to the nearby archaeological site of El Caney (SHPO# AR0100005, IPRC# AR-5) or complex structures such as the vaulted brick tunnel system related to the nearby archaeological site of Sistema Pluvial (IPRC# AR-48-H). If encountered, historically significant finds shall follow the inadvertent discovery plan process outlined in bullet B.6 of the following Monitoring Procedure section. Lastly, there is the potential for human remains in the form of historic and prehistoric burials within the direct APE. If encountered, human remains will trigger the inadvertent discovery plan process outlined in bullet D of the following Monitoring Procedure section.

Monitoring Procedure

The construction crew must coordinate with the archaeological monitor and ensure access during these excavations. Depending on all applicable construction safety regulations, the archaeological monitor will require either direct access to the excavation or direct access to the excavated soil to ensure archaeological resources are not being impacted. The construction crew is to follow the directions of the archaeological monitor in terms of the pace of the excavation and volume of soil removed. If any member of the construction crew sees potential archaeological resources during any phase of construction, they shall call a stop work until the monitor has been able to assess the validity and eligibility of the potential archaeological resources. It is important that the monitor adhere to all the following timelines for submission of all deliverables to the PM and GM. These deadlines are important to ensure that the monitoring is proceeding appropriately and that any issues or concerns can be addressed in a timely manner.

A) <u>Before Construction Begins</u>

1. The Municipality and Construction Manager (CM) will notify the Project Manager (PM), Grant Manager (GM), and SOI-qualified archaeological monitor (monitor) of the proposed activities' start date at least one (1) week in advance of the proposed start date. The PM is responsible for coordination between the CM and monitor. The GM shall notify the PRSHPO of the start date of the project and of the archaeologist who will be conducting the monitoring at least 48 hours prior to the initiation of any work.
2. Before any demolition or construction begins, the Municipality, PM, CM, GM, and monitor will have a kickoff meeting to discuss the procedure for

archaeological monitoring, including the coordination protocol between the monitor and the CM. The monitor will provide an orientation on the area's cultural resources and their proper treatment. The monitor will also explain to construction staff which project activities require archaeological monitoring.

3. The Municipality, CM, PM, and construction crew will complete and sign a statement outlining the activities that may not be performed without the monitor's presence, demonstrating their understanding and commitment to following the archaeological monitoring procedures.
4. The CM will ensure that all personnel in the field are aware that the monitor can provide instructions directly to the construction field crew personnel concerning how to proceed when there is the potential to impact an archaeological resource. The construction field personnel will abide by these requests' examples of which include excavating slowly, stopping the excavation to evaluate a finding, etc.

B) <u>During Demolition and Construction</u>

1. The monitor shall be in the field during all ground-disturbing activities, as specified in Table 1, with full access and clear sightlines. If ground-disturbing work is conducted in multiple locations simultaneously, then a monitor shall be present at each site. Therefore, the number of monitors required in the field will vary based on the number of locations where ground-disturbing work is occurring.
2. The monitor shall provide instructions directly to the construction field personnel concerning how to proceed when there is the potential to impact an archaeological resource. The construction field personnel shall abide by these requests and exercise caution when excavating in areas that may contain buried archaeological resources.
3. The monitor shall keep a record of monitored activities. The monitor shall fill out the Daily Record of Activities Form (see Appendix B). These forms shall be sent weekly to the PM who will submit it to the GM for review. These reports will be included in the final report.
4. After the demolition and removal of surfaces, the monitor shall document any exposed subsurface feature and shall complete a scale plan drawing. The amount, size, and placement of excavation units needed to document the features, if any, shall depend on the size and complexity of the feature being documented. If necessary to understand the context of the identified resource, the monitor should conduct archival research of primary sources (like previous project files, newspapers, journals), cartographic sources, and historical images.

5. The monitor shall document all other archaeological remains identified during construction activities, except for previously unidentified historically significant findings. The documentation shall include a detailed description of the discovery, context, horizontal and vertical provenience, photos, and a plan drawing. This documentation shall be done within a reasonable amount of time, trying not to impact on the project schedule as much as possible.
6. If historically significant archaeological materials are encountered, per stipulations III.B.1.a. and III.B.1.b of the PA, an inadvertent discovery plan shall be implemented and the monitor shall instruct the construction crew to immediately cease work within the vicinity of the inadvertent discovery; take all reasonable measures to avoid or minimize harm to the property; notify the Municipality, PM, CM, and GM of which the GM shall immediately notify the PRSHPO; and adhere to the following protocol:
    i. The monitor shall make a preliminary assessment in an Inadvertent Discovery Report. The assessment shall include a description of the discovery, location, horizontal and vertical extent (if known), context, photographs, and drawings including a site plan. Additionally, the assessment shall include an NRHP-eligibility determination. Lastly, the assessment shall also implement a work plan for continuing construction in recognition of the inadvertent discovery.
    ii. The Inadvertent Discovery Report shall be submitted via email to the PM and GM within 24 hours of the discovery. Construction shall not continue in the vicinity of the inadvertent discovery until the following steps have been completed and the PRSHPO has concurred with the NRHP-eligibility determination.
        1. The GM shall notify the PRSHPO of the NRHP-eligibility determination. If the finding is **not eligible** to the NRHP, the GM shall notify the PRSHPO and provide supporting documentation. Construction activities may resume under archaeological monitoring unless the PRSHPO disagrees with the NRHP determination and makes a timely objection within 48 hours of notification.
        2. If the finding is **eligible** to the NRHP, the criteria of adverse effect shall be applied. If the project activities do not adversely affect the finding, the GM shall notify the PRSHPO and provide supporting documentation. Construction activities may resume under archaeological monitoring unless the PRSHPO makes a

timely objection within 48 hours of the notification.

3. If the project activities have an **adverse effect** on the NRHP-eligible finding, a data recovery plan will be implemented as a treatment measure per Appendix F.H of the PA. The monitor shall develop a data recovery plan with a research design consistent with the Secretary of the Interior's Guidelines for Archeological Documentation (NPS 1983) and the Advisory Council on Historic Preservation's (ACHP 2009) recommendations on the recovery of significant information from archaeological sites. The data recovery plan and research design shall be submitted to the GM for comments, who after review shall submit the plan to the PRSHPO for comments and approval. The PRSHPO shall have two weeks to comment on the data recovery plan. This treatment measure does not apply to burials or human remains.
4. PRDOH in consultation with the PM, GM and Municipality shall determine a specific plan for the curation of artifacts, field and lab records in accordance with the provisions of 36 CFR Part 79, per stipulation III.C.2.a. of the PA.

7. If any additional construction activities are added or design changes are made after the project has begun, the Municipality, CM and PM shall inform the GM and the monitor prior to performing the work. The monitor, in conjunction with GM, shall evaluate these activities and apply the adverse effect criteria. If it is determined that the effect is adverse, the monitor will provide recommendations on how to avoid, minimize, or mitigate the adverse effect. These recommendations will be consulted with the PRSHPO prior to implementation. The PRSHPO will have fifteen days to comment on the recommendations. If no communication is received within that time frame it will be assumed that the PRSHPO has no objection and concurs with the recommendations outlined.
8. If during construction activities a known historic property is affected in an unanticipated manner, the CM shall stop work immediately, and inform the Municipality, PM, GM. The monitor, in conjunction with GM, shall evaluate the unanticipated effects and apply the adverse effect criteria within no more than 24 hours. If the effect is determined to be adverse, the monitor and GM will provide recommendations on how to avoid, minimize, or mitigate such adverse effects. The GM shall consult with the PRSHPO prior to implementation. The PRSHPO will have 48 hours

to comment on the recommendations. If no communication is received within that timeframe, it will be understood that the PRSHPO has no objection and concurs with the recommendations outlined.

C) <u>After Construction Ends</u>

1. Upon the completion of archaeological monitoring, the Municipality, PM and GM shall be notified. The PM shall be responsible for submitting the last weekly report to the GM, who after review will forward it to the PRSHPO.
2. A technical report shall be prepared detailing monitored construction activities, documentation for archaeological features or other findings, location of temporary curatorial repository for any artifacts, and analysis and interpretation of the results. The report must include visual information, such as drawings, photographs, an overview map of the APE with all archaeological resources encountered plotted on the map to scale, and sketch maps of any archaeological features. The report shall be submitted to the GM no later than four to eight weeks after completing the archaeological monitoring work. The GM shall submit the report to the PRSHPO no later than one (1) week after receiving it.

<u>D) Human Remains</u>

If any member of the construction team believes an inadvertent discovery involving possible human remains has occurred, they shall call a stop work in the immediate vicinity and notify the monitor. The archaeological monitor must adhere to the following protocol:

1. Stop working immediately.
2. Project personnel should not take photographs of potential remains and the remains should be treated with dignity and respect, left in situ and protected from further disturbance or harm.
3. Per stipulation III.B.1.a. and III.B.1.b of the PA, the monitor shall immediately notify the local law enforcement office and the coroner/ medical examiner, following applicable Commonwealth statute(s).
4. The monitor shall notify the PM/GM who in turn shall notify the PRSHPO within 24 hours of identifying human remains.
5. The coroner or law enforcement office will make the official ruling on the nature of whether the remains are forensic or archaeological.
6. If the remains are determined to be archaeological in nature, then per stipulation III.B.1.d.iii. of the PA, subsequent actions concerning

the remains shall follow the guidelines outlined in the ACHP's *Policy Statement Regarding the Treatment of Burial Sites, Human Remains, and Funerary Objects* (ACHP 2023).

7. The decision concerning whether to mitigate potential impacts to the remains by avoidance, or whether to disinter the remains for reinterment in a new location shall be made by the GM in consultation with the PRSHPO and shall be consistent with all applicable state statutes and regulations.
8. Construction shall not continue in the area around the human remains as determined by the archaeological monitor until a determination from the GM and PRSHPO has been made, and the plan has been executed on-site by the archaeological monitor.

Summary of Anticipated Products

Daily Monitoring Record of Activities Form – This form should include a description of daily tasks completed including but not limited to demolition activities, construction activities, and their results. It should be completed daily and compiled weekly for submission to the PM and GM for review.

Inadvertent Discovery Report – This report should include identification of any historically significant findings, their location, a detailed description, context, provenience, photos, to-scale plan drawing, the integrity and importance of the findings, and clear recommendations for eligibility status. This shall be submitted to the PM and GM within 48 hours of the inadvertent discovery.

Archaeological Monitoring Plan Final Report – The final report will include the following sections at a minimum: Introduction, Methods, Results, Discussion, and Conclusion. Additionally, the report shall include any relevant photographs of artifacts, features, fieldwork and any relevant maps that show the location of any archaeological resources encountered. Lastly, all fieldwork paperwork such as the Daily Record of Activities Forms, Weekly Reports, and Inadvertent Discovery Reports shall be included and the results summarized in the report. The final report shall be submitted to the PM and GM no later than four to eight weeks after completion of the archaeological monitoring work. The GM shall review the report and submit it to the PRSHPO or return to the monitor for revisions no later than one week after receiving it.

Professional Qualifications

The monitor(s) must meet the minimum Secretary of the Interior Professional Qualifications Standards for Archaeology established in 36 CFR Part 61 (NPS 1983). These are: a graduate degree in archaeology, anthropology, or closely related field; at least one (1) year of full-time professional experience or equivalent specialized training in archaeological research, administration, or management; at least four (4) months of supervised field and analytic experience in general Puerto Rican archaeology; the demonstrated ability to carry research to completion; and at least one (1) year of full-time professional experience at a supervisory level in the study of archaeological resources of the historic period.

References

Advisory Council on Historic Preservation (ACHP)

2023 Policy Statement Regarding the Treatment of Burial Sites, Human Remains, and Funerary Objects. ACHP, Washington, DC. https://www.achp.gov/digital-library-section-106-landing/achp-policy-statement-burial-sites-human-remains-and-funerary

Iglesias Vázquez and Associates

2025 PR-CRP-000771 90% Design Plans for the Revitalization of Plaza Luis Muñoz Rivera in the Urban Center, Arecibo, PR.

Federal Emergency Management Agency

2019 Second Amendment to Programmatic Agreement among the Federal Emergency Management Agency, the Puerto Rico State Historic Preservation Officer, and the Puerto Rico Central Office for Recovery, Reconstruction and Resiliency.

National Park Service

1983 Archeology and Historic Preservation: Secretary of the Interior's Standards and Guidelines for Archaeological Documentation. https://www.nps.gov/subjects/historicpreservation/upload/standards-guidelines-archeology-historic-preservation.pdf

Puerto Rico Department of Transportation and Public Works.

2025, Geographic Information Systems Office, Puerto Rico Highway and Transportation Authority. Electronic Document. https://fotosaereas.dtop.pr.gov/apps/Shop_ACTGIS/ accessed February 9, 2025.

United States Geological Service.

2025, USGS Earth Explorer Historic Aerial Image Database. Electronic document. https://earthexplorer.usgs.gov/ accessed March 3, 2025.

Zedaker, Dylan, Richard Starzak, Berenice Sueiro-Vázquez, Arleen Pabón-Charneco, Antonio Pontón González, and Aramis Font Negrón

2025 Puerto Rico 2017 Disaster Recovery, CDBG-DR Program. City Revitalization Program (City-Rev) Section 106 NHPA Effect Determination Form entitled Revitalization of Plaza Luis Muñoz Rivera in the Urban Center of Arecibo (PR-CRP-000771).

Appendices

Appendix A: SHPO Concurrence Letter

OFICINA ESTATAL DE
CONSERVACIÓN
HISTÓRICA
GOBIERNO DE PUERTO RICO

Executive Director | Carlos A. Rubio Cancela | carubio@prshpo.pr.gov

August 14, 2025

Lauren B. Poche

269 Avenida Ponce de León

San Juan, PR 00917

SHPO-CF-07-18-25-02 - PR-CRP-000771 (Arecibo), Revitalization of Plaza Luis Muñoz Rivera

Dear Ms. Poche,

Our Office has received and reviewed the above referenced project in accordance with 54 USC 306108 (commonly known as Section 106 of the National Historic Preservation Act, as amended) and 36 CFR Part 800: Protection of Historic Properties from the Advisory Council on Historic Preservation.

After a review of all the documentation provided, the PRSHPO agrees with your finding that the proposed project, with the established conditions, will have **no adverse effect** upon PR-CRP-000771 Arecibo:

1. Alternative 3 was chosen for the new fountain pumps and electrical control room as discussed during the January 21, 2025, meeting between the Municipality, GM, and PM.
2. To address any potential impacts to archaeological resources within the Direct APE, archaeological monitoring by an SOI-Qualified archaeologist is required for all work requiring ground disturbance such as excavation and demolition. An archaeological monitoring plan shall be submitted by an SOI-Qualified archaeologist to the PRSHPO and approved prior to any work being performed.
3. To avoid damage to architectural historic properties, a special barrier must be constructed to protect the "Pluma de Muñoz Rivera monolith statue" during construction.
4. To avoid damage to architectural objects, specific handling instructions must be added to

SHPO OFICINA ESTATAL DE CONSERVACIÓN HISTÓRICA
OFICINA DEL GOBERNADOR
STATE HISTORIC PRESERVATION OFFICE
OFFICE OF THE GOVERNOR
OECH

Cuartel de Ballajá (Tercer Piso), Calle Norzagaray, Esq. Beneficencia, Viejo San Juan, PR 00901 | PO Box 9023935, San Juan, PR 00902-3935
787.721.3737 oech.pr.gov

the technical specifications of the project, for the restoration, transportation and installation of the Reina Isabel II and the two Lion Statues.

Please note that should the Agency discover other historic properties at any point during project implementation, you should notify the SHPO immediately. If you have any questions concerning our comments, do not hesitate to contact our Office.

Sincerely,

Carlos A. Rubio Cancela
State Historic Preservation Officer
CARC/GMO/EVR

SHPO
OFICINA ESTATAL DE CONSERVACIÓN HISTÓRICA
OFICINA DEL GOBERNADOR
STATE HISTORIC PRESERVATION OFFICE
OFFICE OF THE GOVERNOR
OECH
Cuartel de Ballajá (Tercer Piso), Calle Norzagaray, Esq. Beneficencia, Viejo San Juan, PR 00901 I PO Box 9023935, San Juan, PR 00902-3935
787.721.3737 oech.pr.gov

Appendix B: Monitoring Daily Activity Sheet

	PUERTO RICO 2017 DISASTER RECOVERY **City Revitalization Program** **ARCHAEOLOGICAL MONITORING DAILY RECORD OF ACTIVITIES**
Case ID:	**Project Location:**
Municipality:	**Project Coordinates** (lat/long)**:**

SOI Qualified-Archaeologist:
Date of Monitoring: Click or tap to enter a date.
Work Hours:

Description of work performed by contractor and supervised by the Monitor:

	YES	NO
Was an archaeological remain documented during the day. If yes, include required information below.	☐	☐
Was an exceptional archaeological remain identified during the day? If yes, explain below.	☐	☐
Have the construction activities affected a previously unidentified property or a known historic property in an unanticipated manner? If yes, explain below.	☐	☐
Has there been a change in the scope of work of the project? If yes, explain below.	☐	☐

	PUERTO RICO 2017 DISASTER RECOVERY **City Revitalization Program** ARCHAEOLOGICAL MONITORING DAILY RECORD OF ACTIVITIES
Case ID:	**Project Location:**
Municipality:	**Project Coordinates** (lat/long):

Site Photos	
Direction of Photo: Description:	
Direction of Photo: Description:	

Appendix C: 90 Percent Design Plans

OFICINA ESTATAL DE
CONSERVACIÓN
HISTÓRICA
GOBIERNO DE PUERTO RICO

Executive Director | Carlos A. Rubio Cancela | carubio@prshpo.pr.gov

August 14, 2025

Lauren B. Poche

269 Avenida Ponce de León

San Juan, PR 00917

SHPO-CF-07-18-25-02 - PR-CRP-000771 (Arecibo), Revitalization of Plaza Luis Muñoz Rivera

Dear Ms. Poche,

Our Office has received and reviewed the above referenced project in accordance with 54 USC 306108 (commonly known as Section 106 of the National Historic Preservation Act, as amended) and 36 CFR Part 800: Protection of Historic Properties from the Advisory Council on Historic Preservation.

After a review of all the documentation provided, the PRSHPO agrees with your finding that the proposed project, with the established conditions, will have **no adverse effect** upon PR-CRP-000771 Arecibo:

1. Alternative 3 was chosen for the new fountain pumps and electrical control room as discussed during the January 21, 2025, meeting between the Municipality, GM, and PM.
2. To address any potential impacts to archaeological resources within the Direct APE, archaeological monitoring by an SOI-Qualified archaeologist is required for all work requiring ground disturbance such as excavation and demolition. An archaeological monitoring plan shall be submitted by an SOI-Qualified archaeologist to the PRSHPO and approved prior to any work being performed.
3. To avoid damage to architectural historic properties, a special barrier must be constructed to protect the “Pluma de Muñoz Rivera monolith statue” during construction.
4. To avoid damage to architectural objects, specific handling instructions must be added to

the technical specifications of the project, for the restoration, transportation and installation of the Reina Isabel II and the two Lion Statues.

Please note that should the Agency discover other historic properties at any point during project implementation, you should notify the SHPO immediately. If you have any questions concerning our comments, do not hesitate to contact our Office.

Sincerely,

Carlos A. Rubio Cancela
State Historic Preservation Officer
CARC/GMO/EVR

Cuartel de Ballajá (Tercer Piso), Calle Norzagaray, Esq. Beneficencia, Viejo San Juan, PR 00901 I PO Box 9023935, San Juan, PR 00902-3935
787.721.3737 oech.pr.gov

July 18, 2025

Carlos A. Rubio Cancela
State Historic Preservation Officer
Puerto Rico State Historic Preservation Office
Cuartel de Ballajá (Tercer Piso)
San Juan, PR 00902-3935

Puerto Rico Disaster Recovery, CDBG-DR City Revitalization (City-Rev) Program

Section 106 NHPA Effect Determination Submittal for PR-CRP-000771, Revitalization of Plaza Luis Muñoz Rivera in the Urban Center, Arecibo, Puerto Rico – *No Adverse Effect, Conditioned*

Dear Architect Rubio Cancela,

On February 9, 2018, an allocation of Community Development Block Grant - Disaster Recovery (CDBG-DR) funds was approved by the United States Department of Housing and Urban Development (HUD) under the Federal Register Volume 83, No. 28, 83 FR 5844, to assist the Commonwealth of Puerto Rico in meeting unmet needs in the wake of Hurricanes Irma and Maria. On August 14, 2018, an additional $8.22 billion recovery allocation was allocated to Puerto Rico under the Federal Register Volume 83, No. 157, 83 FR 40314. With these funding allocations, the Puerto Rico Department of Housing (PRDOH) aims to lead a comprehensive and transparent recovery for the benefit of Puerto Rico residents. To faithfully comply with HUD's environmental requirements, the Puerto Rico Department of Housing contracted Horne Federal, LLC (HORNE) to provide environmental records review services that will support the objectives of the Puerto Rico Department of Housing (PRDOH) for CDBG-DR.

GOVERNMENT OF PUERTO RICO
DEPARTMENT OF HOUSING

April 30, 2024

Arch. Carlos A. Rubio Cancela
Executive Director
Puerto Rico State Historic Preservation Office
Cuartel de Ballajá, Third Floor
San Juan, Puerto Rico 00901

Re: Authorization to Submit Documents for Consultation

Dear Arch. Rubio Cancela,

The U.S. Department of Housing (HUD) approved the allocations of Community Development Block Grant (CDBG-DR) funds on February 9, 2018. It also approved the allocation of Community Development Block Grant Mitigation (CDBG-MIT) funds on January 27, 2020. The purpose of these allocations is to address unsatisfied needs as a result of Hurricanes Irma and Maria in September 2017; and to carry out strategic and high-impact activities to mitigate disaster risks and reduce future losses.

To comply with the environmental requirements established by HUD, the Department of Housing of Puerto Rico (PRDOH) contracted Horne Federal LLC to provide environmental review services, among others, that will support the objectives of the agenda for both CDBG-DR and CDBG -MIT Programs.

To expedite the processes, Horne Federal LLC, is authorized to submit to the State Historic Preservation Officer, documentation of projects related to both the CDBG-DR and CDBG-MIT on behalf of PRDOH.

Cordially,

Aldo A. Rivera Vázquez, PE
Director
Division of Environmental Permitting and Compliance
Office of Disaster Recovery

On behalf of PRDOH, HORNE is submitting documentation for the Revitalization of Plaza Luis Muñoz Rivera in the Urban Center project. The Municipality of Arecibo improvements and renovations to the existing Plaza, and the sidewalk located to the east of the Plaza in front of the San Felipe Apostol cathedral between José de Diego Avenue and Gonzalo Marín Street, as well as the sidewalk located to the west side of Calle Palma between José de Diego Avenue and Gonzalo Marín Street. The full scope of the project is described in the submitted documentation, which includes mapping, photographs, 90% design plans, and alternatives for the fountain pump and electrical control room.

Based on the documentation provided, the Program requests a concurrence with a determination that "**No Adverse Effect**" is appropriate for this undertaking, conditioned to the following:

1. Alternative 3 was chosen for the new fountain pumps and electrical control room as discussed during the January 21, 2025, meeting between the Municipality, GM, and PM.
2. To address any potential impacts to archaeological resources within the Direct APE, archaeological monitoring by an SOI-Qualified archaeologist is required for all work requiring ground disturbance such as excavation and demolition. An archaeological monitoring plan shall be submitted by an SOI-Qualified archaeologist to the PRSHPO and approved prior to any work being performed.
3. To avoid damage to architectural historic properties, a special barrier must be constructed to protect the “Pluma de Muñoz Rivera monolith statue” during construction.
4. To avoid damage to architectural objects, specific handling instructions must be added to the technical specifications of the project, for the restoration, transportation and installation of the Reina Isabel II and the two Lion Statues.

If you have any questions or concerns, please contact me by email at kristin.sanders@horne.com or phone at 225-276-2109.

Kindest regards,

Kristin P. Sanders
Historic Preservation Manager

Attachments

PR-CRP-000771

Revitalization of Plaza Luis Muñoz Rivera in the Urban Center Project

Arecibo, Puerto Rico

Section 106 Effect Determination Form

Puerto Rico 2017 Disaster Recovery, CDBG-DR Program **City Revitalization Program (City-Rev)** **Section 106 NHPA Effect Determination**	DEPARTMENT OF HOUSING GOVERNMENT OF PUERTO RICO
Subrecipient: Municipality of Arecibo	
Case ID: PR-CRP-000771	**City**: Arecibo, Puerto Rico
Project Name: Revitalization of Plaza Luis Muñoz Rivera in the Urban Center of Arecibo	

Project Location: José de Diego Avenue, Arecibo PR 00612	
Project Coordinates: 18.47198334, -66.71591680	
TPID (Número de Catastro): 012-086-139-000	
Project Type:	**Type of Undertaking:**
☐ Building ☒ Plaza ☐ Streets and/or pedestrian facilities ☐ Utilities ☐ Park	☒ Rehabilitation/Repair ☐ Urban Renewal ☒ Demolition ☒ New Construction
Construction Date: 2nd half of the 18th century	**Property Size** (acres): 0.83

SOI-Qualified Architect/Architectural Historian: Richard Starzak, MA, Berenice Sueiro-Vázquez, B Arch, Arleen Pabón-Charneco, PhD JD and Antonio Pontón González, MA
Date Reviewed: 7/7/2025
SOI-Qualified Archaeologist: Dylan Zedaker, MA, and Aramis Font Negrón, MA
Date Reviewed: 7/09/2025
SOI-Qualified Reviewer: Carmen-Marla López, Historic Architect
Date Reviewed: 7/10/2025

In compliance with Section 106 of the National Historic Preservation Act (NHPA), the Program is responsible for identifying historic properties listed in the National Register of Historic Places (NRHP) and any properties not listed that would be considered eligible for listing that are located within the geographic area of potential effects (APE) of the proposed project and assessing the potential effects of its undertakings on these historic properties. It has been determined by the SOI-qualified professionals that the project undertaking does not conform to Stipulation II.A (Project Review – Programmatic Allowances) of the Section 106 Programmatic Agreement (PA) among FEMA, SHPO, and COR3, as amended (May 3, 2023).[1]

Project Description (Undertaking)

The Municipality of Arecibo, assisted by the Puerto Rico Department of Housing (Departamento de la Vivienda de Puerto Rico) (PRDOH) and the Puerto Rico 2017 Disaster Recovery, CDBG-DR Program - City Revitalization Program (Programa de Revitalización de la Ciudad del Gobierno Federal) (CITY-REV), proposes to rehabilitate the Plaza Luis Muñoz Rivera

[1] A previous Section 106 NHPA Effect Determination Forms (EDFs), prepared by Antonio Pontón González and Aramis Font Negrón was reviewed by the Program on 22 August 2024. The present EDF, prepared by ICF is a brand-new document based on new background research, as well as a new EDF template. This EDF includes field photos taken on 02/24/23 and carried out by the author of the previous EDF, Antonio Pontón González. All sections in this EDF were reorganized and formatted by ICF: Both ICF and the previous EDF authors provided information for the Project Description (Undertaking), Area of Potential Effects, and Identification of Historic Properties – Architecture sections. ICF prepared the Environmental Context, Historic Context, Historic Properties – Archaeology, and Determination Sections. Historical Compliance Consulting prepared the Historic Period subsection.

(*Plaza*[2]) in the Arecibo Traditional Urban Center (TUC). The project description and details in this section were provided by the designer, Iglesias Vazquez and Associates (IVA), who produced the design plans (See "Project Architectural Plans, PR-CRP-000771 Revitalization of Plaza Luis Muñoz Rivera in the Urban Center, Arecibo, Puerto Rico – 90% Design Drawings-Revised dated 7/16/2024"). The project consists of improvements and renovations to the existing *Plaza* (Figure 1). The project also includes the sidewalk located to the east of the *Plaza* in front of the San Felipe Apostol cathedral between José de Diego Avenue and Gonzalo Marín Street, as well as the sidewalk located to the west side of Calle Palma between José de Diego Avenue and Gonzalo Marín Street.

Existing Plaza layout and elements

The existing *Plaza* is a flat open area enclosed by a perimeter low wall of concrete pillars, a wood handrail, and cast-iron decorative panels, raised approximately 12" above the street level (Figure 2). There are eight entrances to the *Plaza level*, located in their 19th century locations based on historic photographs: three along the north side with ramps up an average of 12" from the sidewalk and three along the south side, one on the east side, and one on the west side, all with concrete stairs up an average 3'-6" from the sidewalk. All the existing concrete vertical elements are covered with prefabricated concrete veneer panels with a rough texture that simulates *caliza* stone. These panels were made in Puerto Rico by Caribbean Cast Stone (now Prefab713.com). The retaining wall facing the south side of the existing *Plaza* is covered with natural blue-grey stones cut in rectangular patterns.

<u>The Gazebo</u>

The current gazebo located on the west side of the *Plaza* level was built in 1990 as part of the remodeling done by IVA. The structure is raised 18" above the *Plaza* level and consists of an octagonal faceted plan with eight round columns mounted on concrete pillars. The columns are connected by arched beams and topped with a stylized garden pagoda-style roof that has circular shingles. As shown in a photograph from 1889 (Figure 3), a previous version of the Gazebo was located in the center of the plaza, rather than the current west side. The existing gazebo designed by IVA has a similar architectural typology as the 1889 version but at a smaller scale (Figure 4) for use as a shading and resting place. The existing gazebo has a total height of 27'-8" plus 18" for the raised concrete platform at its base and a width of 9'-8".

[2] Note: For consistency, when referring to the existing configuration of the plaza, the term is capitalized and italicized (*Plaza*). When referring to "plaza" as a type, or earlier configurations to Arecibo's town plaza over time, the term is not bolded, not capitalized, and not italicized.

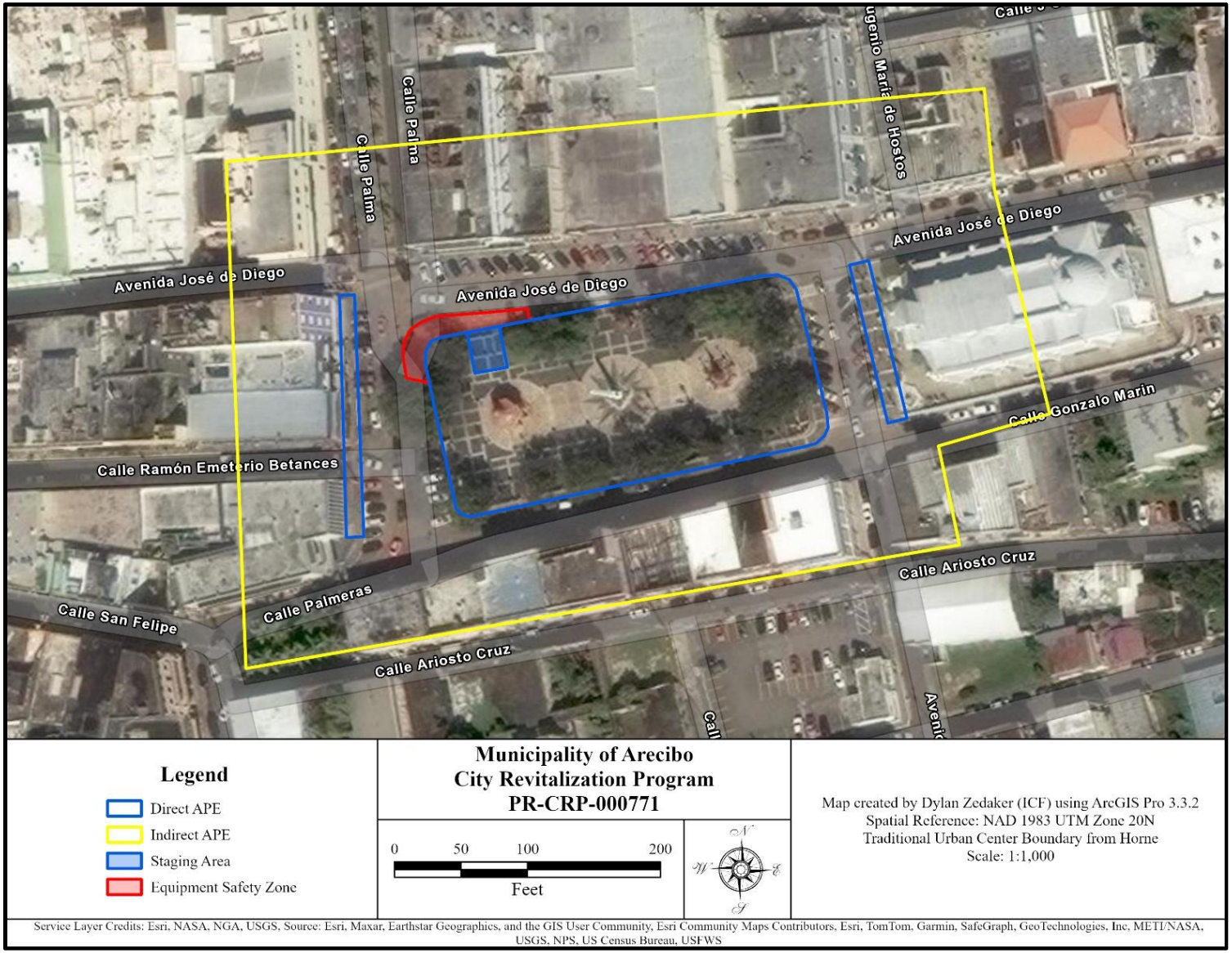

Figure 1. Project (Parcel) Location – Area of Potential Effects Map (Aerial)

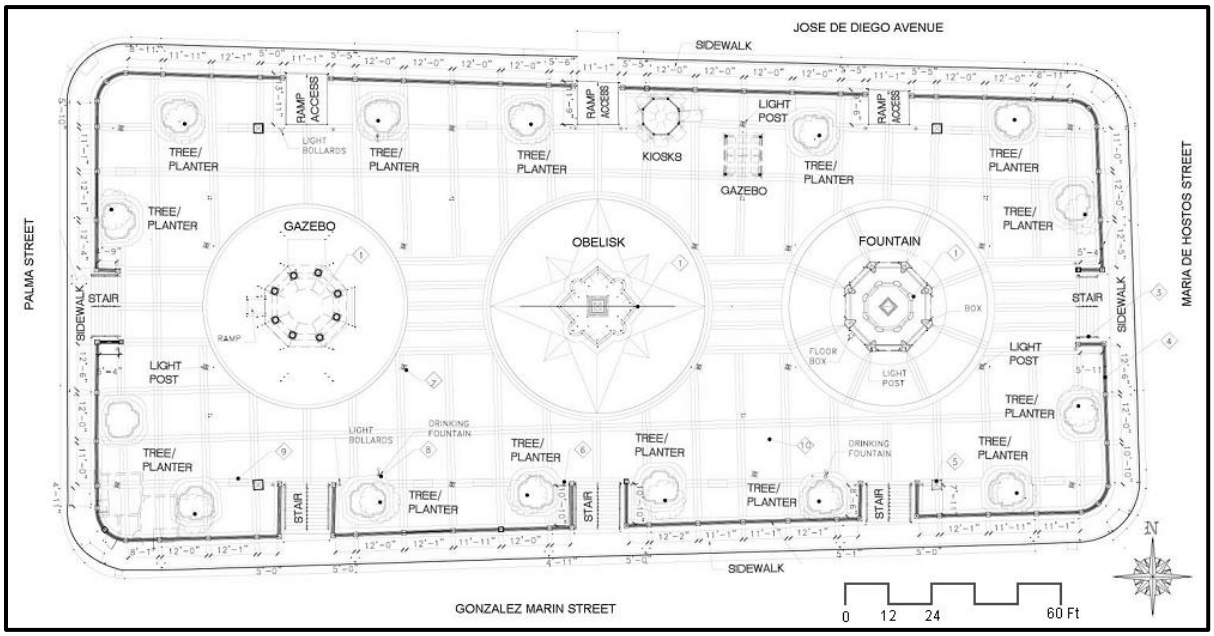

Figure 1. Plan drawing using the current dimensions and layout of the main existing elements of the ***Plaza*** created in 2023 by Iglesias Vazquez and Associates (IVA).

Figure 3. The photo above was published by GeoIsla.com and is dated 1889. The photo was taken by the Italian photographer A. Moscioni. The stylized no longer extant gazebo at the center of the plaza and a no longer extant circular fountain can be seen in the bottom right corner of the photograph.

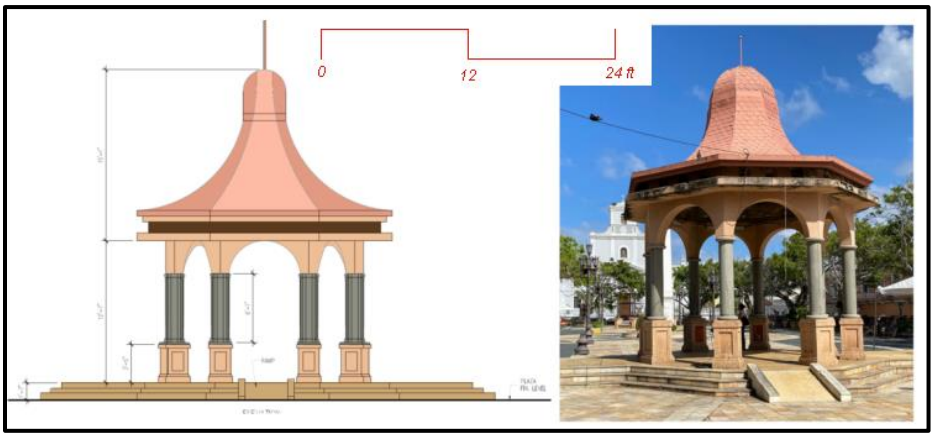

Figure 2. The image on the left was created by IVA (2023) using the current dimensions and layout of the existing gazebo building. The photo on the right was taken by the Antonio Pontón González and of the gazebo facing east (2023).

Obelisk

The obelisk sculpture located at the center of the *Plaza* level was designed and made in 1916 by the Puerto Rican sculptor Víctor Cott Negrón. The obelisk sculpture has a base dimension of 2′ x 2′ and has a height of 32′-10″. The sculpture, named "La Pluma de Muñoz Rivera" is dedicated to the memory of Luis Muñoz Rivera, a famous Puerto Rican poet, journalist and politician. It was installed as a gift by "Fomentos Arecibeños", a local civic club presided over by Don Miguel Roses Artau. The base pedestal has a square shape with dimensions 3′-4″ x 3′-4″ and a height of 8′-5″. The base has a neoclassic design with sculpted seals of Puerto Rico with the letters "F" and " I" (Fernando and Isabel) on each side at the north and south facades and a "1916" date logo on the north and south sides (Figure 5). The original design of the obelisk had a hexagonal planting area at the base with four concrete vases symmetrically placed and small concrete pillars that held 1½" diameter pipes to create a protective fence. The original vases were removed but two of the vases are now located as decorations at the front patio of a house in Arecibo. The 1956 remodeling work substituted the area surrounding the base with an octagonal planting that has a Spanish-Revival stylized border pattern, which was mimicked in the 1990 remodeling by IVA as a floor décor design around the plantings of trees.

Fountain

The existing fountain on the east side was designed by IVA as part of the remodeling of the *Plaza* in 1990 to replace an earlier fountain located on the west side in the 1956 design. The existing fountain consists of an octagonal pool with a central raised bowl (Figure 6). The existing design has a modern style, but the eight light poles that stand over concrete pillars at the vertices of the octagon have an eclectic style that combines a Classic Greek column shaft with a Corinthian base and art-deco capital and bulb. The light poles on the plaza ca. 1917 had

Figure 3. The drawing to the left was created by IVA (2023) using the current dimensions and layout of the obelisk and its base. The photo in the middle was taken from the article "Víctor Manuel Cott Negrón, nuestro primer escultor por excelencia," published by El Vocero newspaper on February 4, 2023. The photo to the right shows the base of the obelisk facing east with the cathedral in the background[3].

Figure 6. Drawing of the fountain using the current dimensions and layout and was created by IVA (2023). The photo to the right is of the existing fountain facing northwest[4].

[3] The photo to the right was taken by Antonio Pontón González (2023)
[4] The photo to the right was taken by Antonio Pontón González (2023)

round bulbs like the ones in the existing fountain (see Figure 5, center photo, and Figure 6, right photo) but the poles were Art-Deco style. Other poles and bulbs (luminaries) in the existing *Plaza* follow this eclectic style with overlays of a garden style at the larger central poles.

Fencing/ Railing

The existing *Plaza* is surrounded by a fence/railing made of concrete pillars, a wood handrail, and cast-iron decorative panels (Figure 7). The style has modern lines but has a strong eclectic flavor arising from the cast iron panels made ca. 1990 as part of the remodeling by IVA. The *Plaza* has had four main design changes presented by the different architectural design concepts for the railing/fence as it has related to the rest of the *Plaza* composition as well (Figure 8):

- ✧ 1890 and earlier - modern cast iron geometrical design (a)
- ✧ 1898 and later - eclectic mix of pre-existing modern elements, Victorian era European Garden architectural concepts, and decorative architectural elements (b)
- ✧ 1956 and later – simplified arcaded concrete railing (c)
- ✧ 1990 remodeling - eclectic mix of pre-existing elements and commercial decorative architectural elements

Benches

The bench side arm rests have a commercial decorative architectural design. The benches appear very similar to the DuMor model number 490 (Dumor.com) and are finished with a matte powder coating. There are a total of twelve (12) benches distributed around the Plaza, some of which are broken or unusable. The *Plaza* also has concrete seating benches integrated into the eight sides of the existing fountain's octagonal-shaped pool.

Stair railings

The modern style stair railings are made with vertical 1 1/2" aluminum pipes and a wooden handrail with curved edges. The handrails do not extend at least 12" beyond the stairs as required by ADA.

Drinking fountains

The existing *Plaza* has four (4) drinking fountains made with a cast iron body that has a commercial decorative design. The fountains have two-level drinking bowls as required by ADA at the time of installation (1990). The drinking fountains are currently disconnected and are not working.

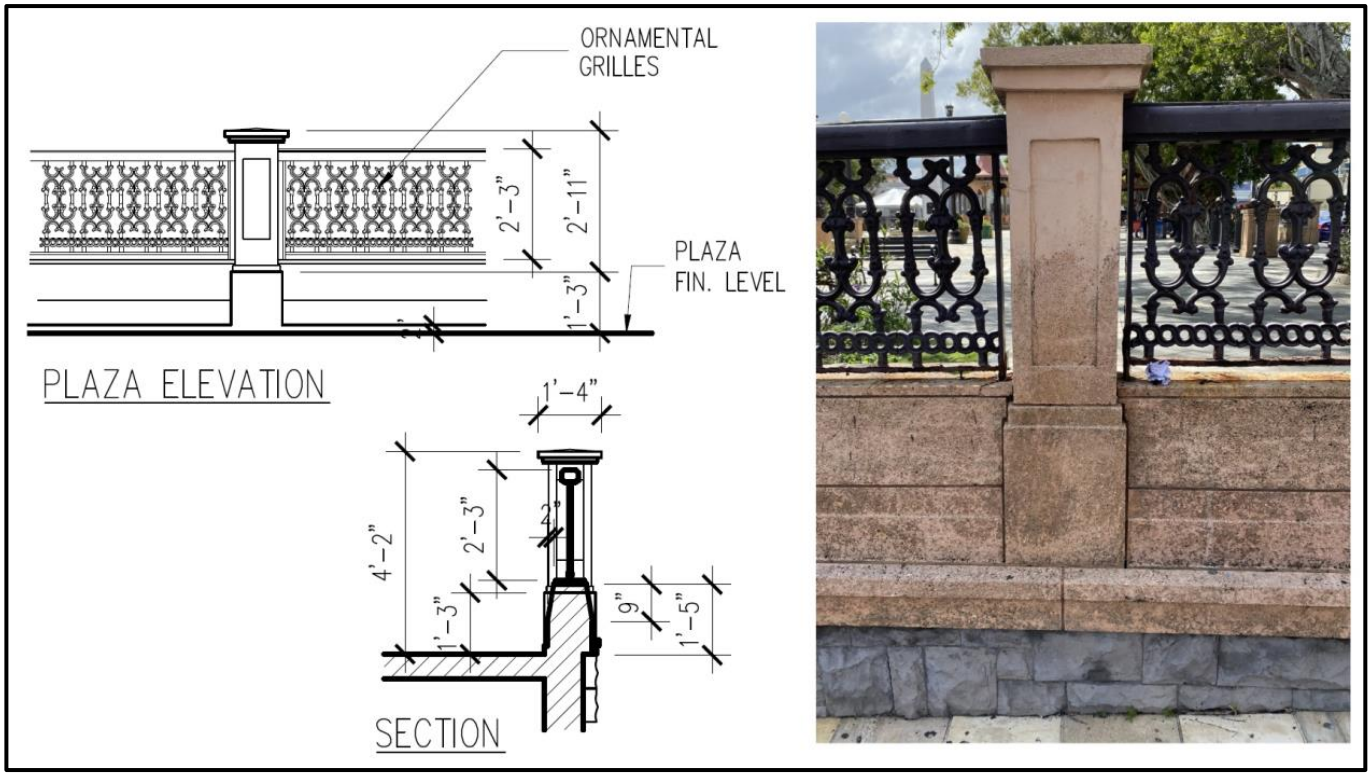

Figure 7. The existing surrounding fence/railing: the drawing to the left was created by IVA for this project (2023) using the current dimensions and layout of the fence/railing[5].

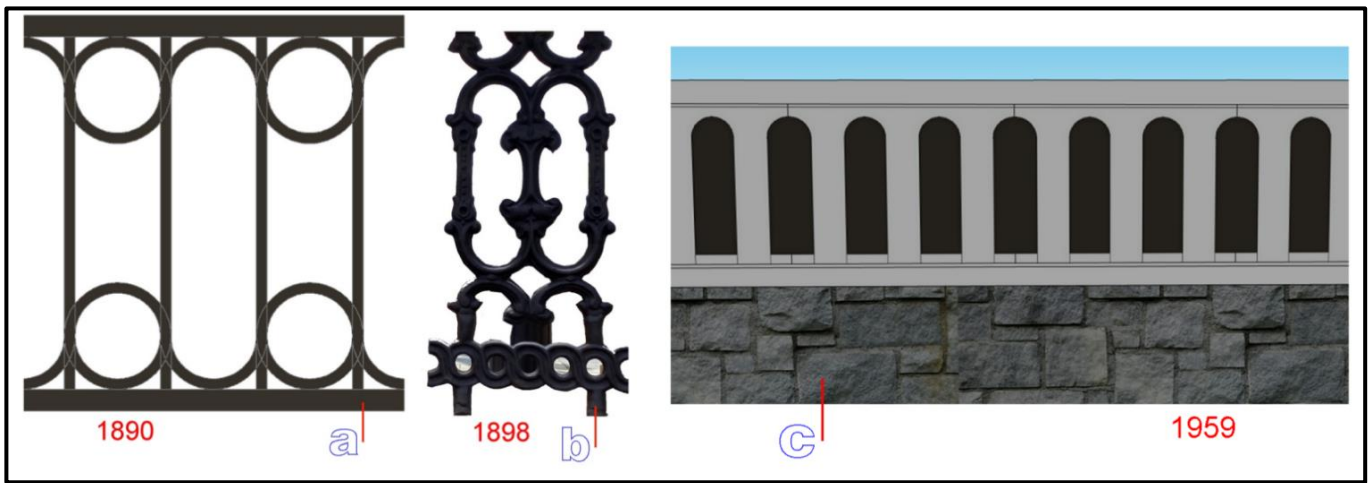

Figure 8. The three different perimeter railing / fence styles that have existed in the ***Plaza***. The existing one resembles the one in the middle from 1898.

[5] The photo to the right was taken by Antonio Pontón González (2023)

Lighting and poles

The lighting of the existing *Plaza* and sidewalks is done via four types of poles and luminaires installed in the 1990 remodeling by IVA (Figures 9 and 10). The luminary types are as follows: (a) - Large 4-lamp pole, Neo-classical style with an ornamental, garden-style spiral garland. The luminaires have a classic (wider at the top) eight-sided glass and metal lamp box that has a coronet with eight elongated crests and a pointed metal spike at the center. (type a1—missing lamp box); (b) - Single-luminaire pole that has the same configuration as (a) but with only one lamp; (c) - poles and lamps located at the eight vertices of the fountain pool, Neo-classical in style pole with a round, white glass bulb lamp mounted over a large capital made with three major discs. The base of each pole has four metal applique sculptures of a fish in a vertical position and four leg bases that resemble the legs of an elephant; and (d) - low-lighting bollard element made with a classic-style metal assembly.

Landscape

The main vegetation in the *Plaza* is found in 15 planter boxes that form part of the existing geometric pattern (Figure 11). Fourteen planter boxes have one tree of the species Ficus Microcarpa planted ca. 1956 that have reached at least 35 feet in height, but the fifteenth box on the west side is empty because the tree was toppled by Hurricane María (Sept. 2017). New large rectangular planting areas are visible at the north and south sides, and around the large-scale fountain at the west side. The obelisk planter retained its Beaux-Arts style shape in respect to the designer, Víctor Manuel Cott Negrón. Newly planted baby ficus trees, still protected with white wooden cages, are visible in planting areas on both sides of the *Plaza*.

Retaining walls

All the floors and walls of the *Plaza* are made with reinforced concrete, except the original retaining walls at the south, east, and west sides (Figure 12). The original retaining wall was made with masonry or stone blocks and is approximately 60 cm (24 inches) wide. Additionally, small ventilation holes (for the fountain pumps) existed ca. 1964, to provide additional access and/or ventilation for the mechanical/ electrical equipment for the previous large fountain pumps (Figure 13).

Figure 9. The different types of luminaries around the fountain area.

Figure 10. The four types of luminaries in the existing ***Plaza***.

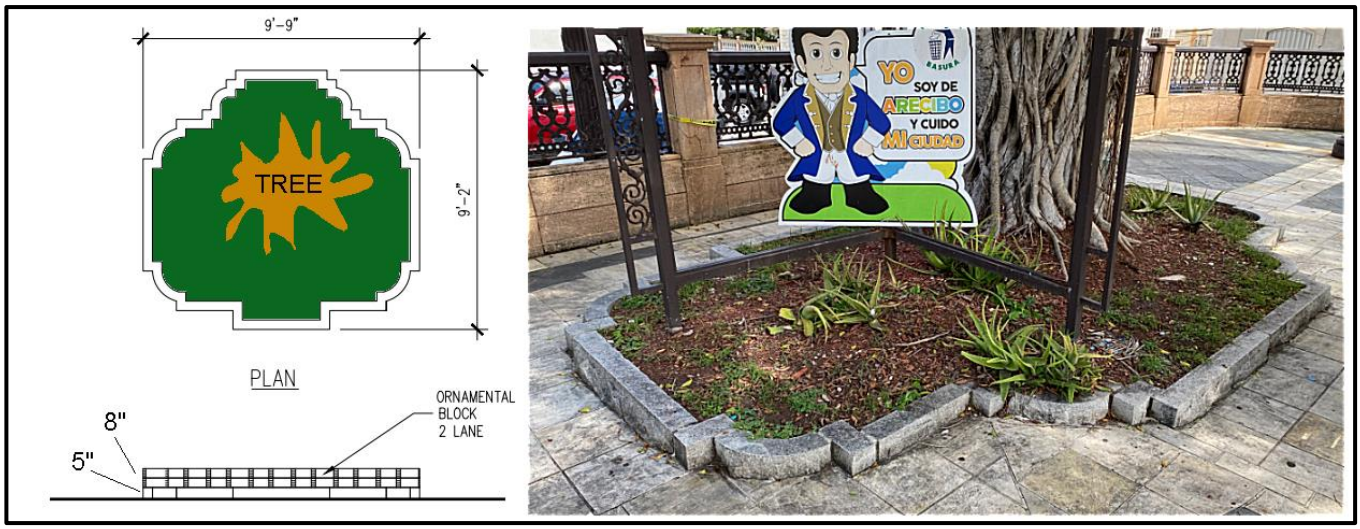

Figure 11. The drawing (above left) of a typical planting area around a tree was done by IVA (2023) using the current dimensions and layout of the plantings. The photo on the right is by the author (2023).

Figure 12. The photo (dated ca. 1964) shows the breaking of the original retaining wall on the southwest corner of the ***Plaza***. The concrete balustrade and lamps seen belong to the 1956 remodeling (Source: *Pinterest.com*).

Figure 13. Photograph of the ***Plaza*** at the start of "Fiestas patronales" dated 1959 (*Pinterest.com*), shows the immense water jets of the new fountain.

During the 1990 remodeling by IVA, the fountain location was changed to the east side of the *Plaza*, where a smaller fountain had already been installed in 1956. In the earlier location, the small fountain can be seen right behind the central Obelisk statue (Figure 14). The new fountain installed by IVA used more efficient and smaller pumps, so the space requirements for the "basement" were reduced (Figure 15). The red arrow denotes where a hole was made in the original wall, the blue polygons represent the area under the *Plaza* slab currently used as the kitchen and toilet of the "Cactú Restaurant" and the green polygon denotes the electrical and mechanical fountain pump room. The additional space in the corner of the basement level was later used as the kitchen and toilet for Cactú restaurant (see Figure 15).

Figure 44. A photograph of the plaza, one day before its inauguration after the remodeling of 1956 (Source: *Pinterest.com*).

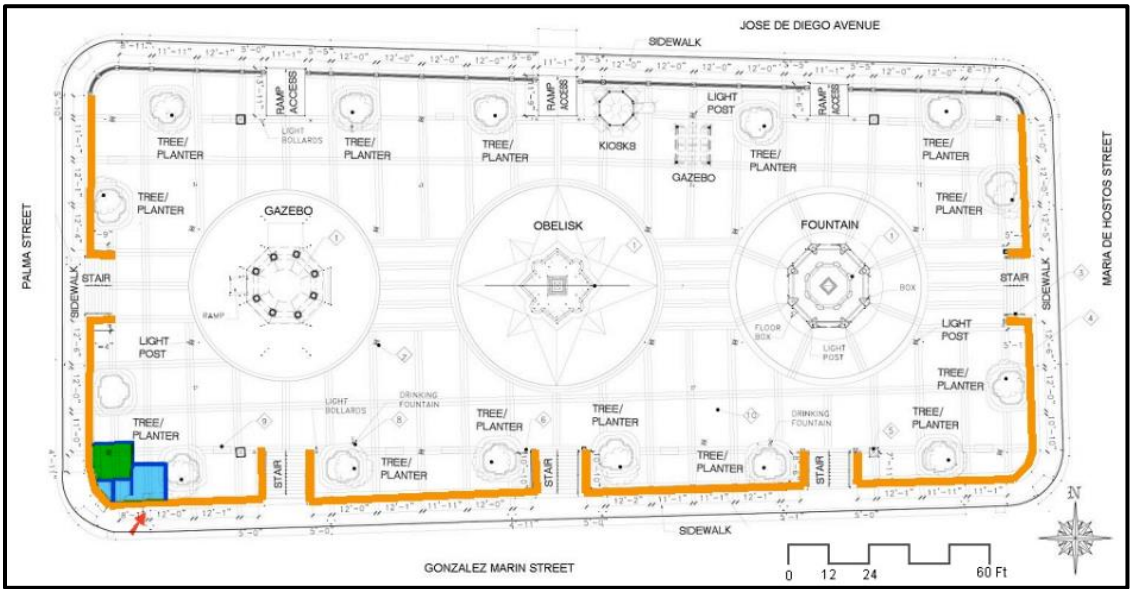

Figure 15. Plan drawing showing the approximate location of the retaining wall (orange line).

To understand the stratification of all previous renovations of the plaza, a cross section was produced to illustrate the various changes to the plaza through time (Figure 16). Starting from the base, the orange polygon (a) represents the approximate location and profile of the original grade. The slope towards the north and south is typical for dune formation. The green polygon (b) represents the layer of material deposited c. 1800 or later as part of the construction of a flat surface for the plaza, which may contain a mix of historic artifacts as well as archaeological remains. The blue polygon (c) represents the base material deposited for the construction of the concrete floor slab of the plaza in 1956, which was left in place and underlies the new tiles installed during the remodeling project by IVA in 1990. Lastly, the red polygon (d) represents the original brick/ stone wall build ca. 1800, which was plastered and covered with a veneer of grey-blue stones by IVA during the 1990 renovation (Figure 17).

Floor patterns and materials

The floors of the existing *Plaza* are covered with 12" x 12" natural stone tiles with different geometric patterns and enhancements per the 1990 construction plans (Figures 18). The shaded areas show the extent of the new 6" floor slab that were installed. The current floor plan has been mapped and matched with photos taken by the Antonio Pontón González (Figures 19 and 20). The orange polygon n (a) in the figure represents the exposed aggregate with dark grey pebbles with bands of 12" x 12" light cream-colored tiles. The grey polygon (b) in the figure represents the large areas of dark stone tiles and bands of light cream-colored stone tiles. The violet polygon (c) in the figure represents the large areas of light cream-colored stone tiles and detailed patterns made with dark stone tiles (specifically an 8-pointed star).

Wall patterns and materials

The walls are covered with prefabricated cast stone panels that have a synthetic caliza (limestone) texture and a light peach-cream color (Figure 21). The panels were installed during the remodeling by IVA in 1990 and manufactured by Caribbean Cast Stone in Vega Baja. The panels have suffered discoloration, breakage, and detachment from the base concrete in some areas.

Storm and sanitary drainage

The storm drainage of the *Plaza* is superficial. There is an average slope of 0.015 m/m that runs from north to south and towards the east and west at the ends of each side (Figure 22). The only sanitary connection to the street is located at the "Cactú restaurant" located at the "basement level" of the southwestern corner of the *Plaza*.

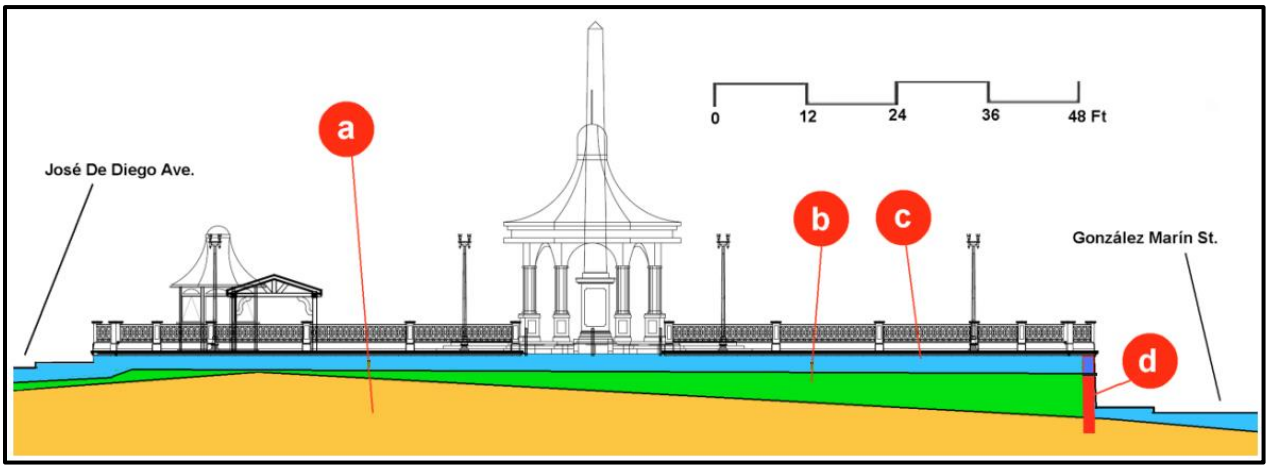

Figure 16. Cross section (north to south) of the ***Plaza*** [6].

[6] Figure produced by Antonio Pontón González (2023)

Figure 17. The southeast corner of the ***Plaza***[7].

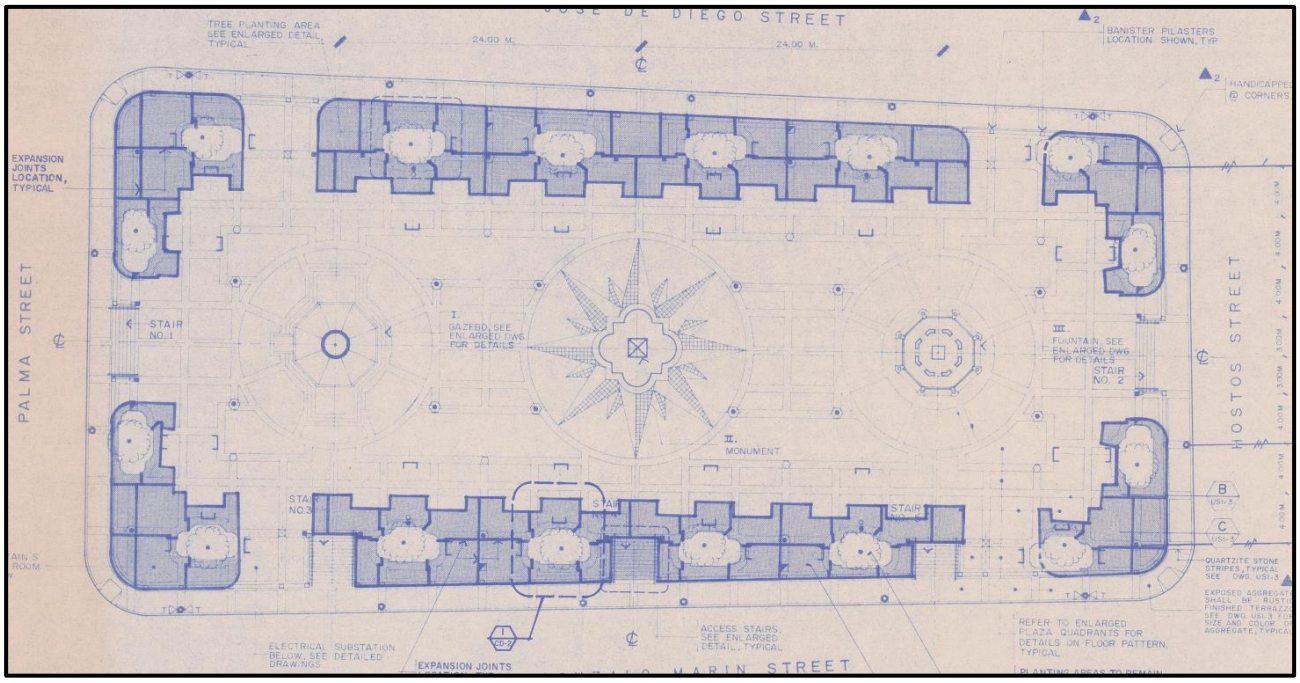

Figure 18. Copy of the 1990 construction documents made by IVA for the ***Plaza***. Source: Archivo del Instituto de Cultura Puertorriqueña (2023).

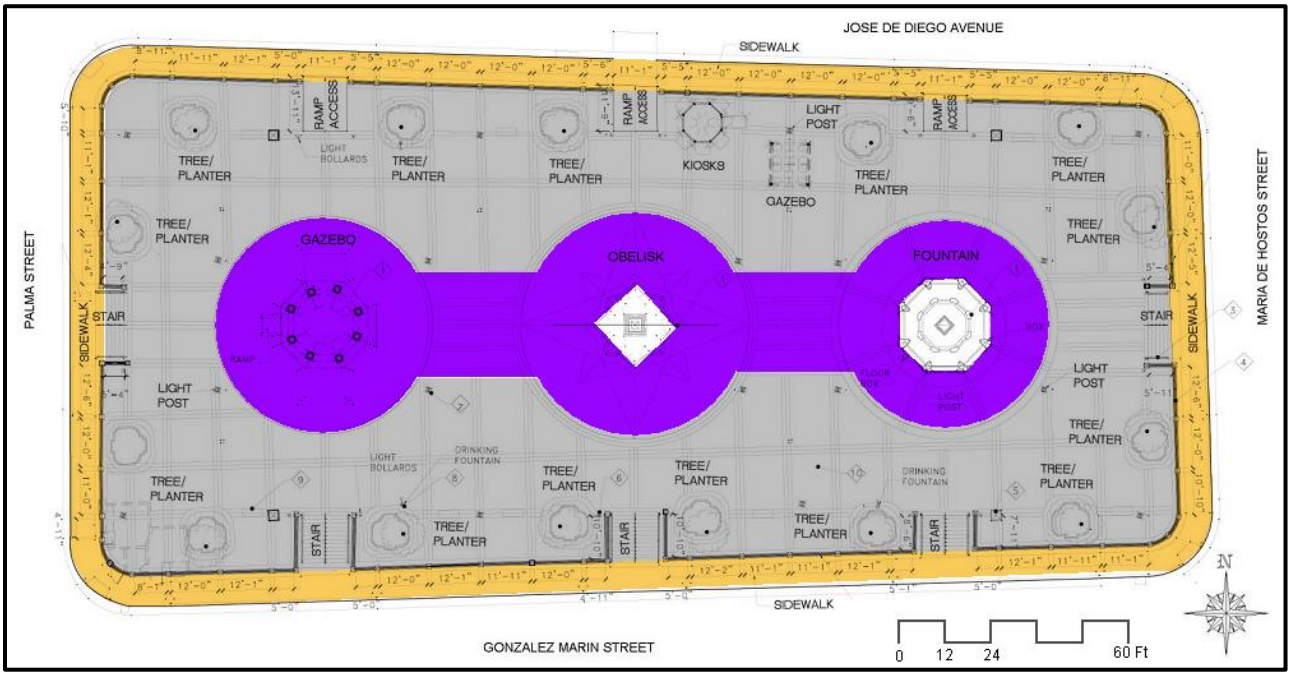

[7] Photograph taken by Antonio Pontón González (2023)

Figure 19. Current floor design of the ***Plaza***[8].

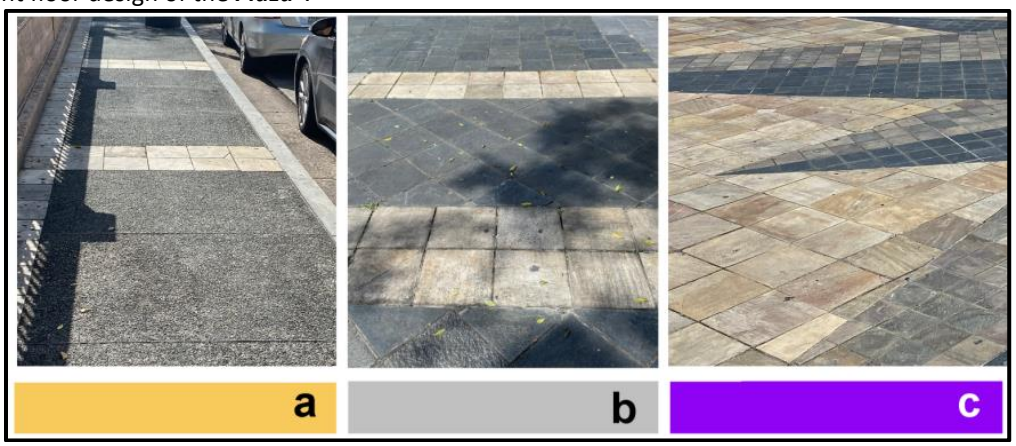

Figure 50. The various stone tiles designs used in the ***Plaza***[9]

Figure 21. The use and condition of the cast stone material.[10]

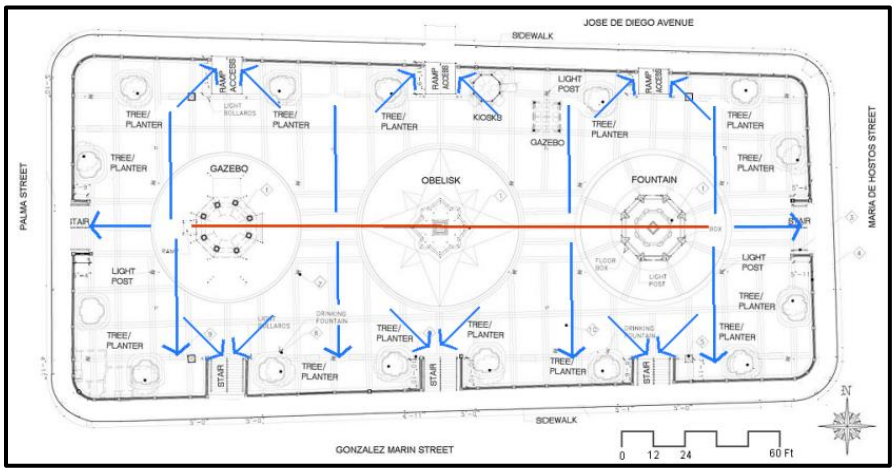

Figure 62. Diagram of the superficial drainage flow lines in blue and the ***Plaza*** centerline in red.

[8] Photographs by Antonio Pontón González (2023).
[9] Photographs by Antonio Pontón González (2023).
[10] Photographs by Antonio Pontón González (2023).

Electrical and communications

The electrical point of connection to the *Plaza* is located at the "basement level" of the southwestern corner of the *Plaza*, inside the mechanical room. There is a 200A main disconnect switch for the *Plaza*. There are three panelboards inside this room with these labels: "Control Fuente / Control Alumbrado / Paned Distribucion 120-240".

Lighting

The lighting for the *Plaza* areas is done by means of pole-mounted luminaires (Figure 23). There are some damaged and not working bollard-type low lights close to the stair areas.

Description of the Proposed Scope of Work (SOW)

The *Plaza* is within the Arecibo TUC and serves as a gathering point, area for leisure and recreation, a distribution center, outdoor activity area, art and cultural space, music venue, religious activities' space and overall, an open space for our citizens and visitors. The *Plaza* is owned by the Municipality of Arecibo and the municipality's goal is to renovate and improve this public facility after hurricanes Irma and Maria severely damaged the infrastructure. The *Plaza* has received funds from FEMA under Project No. 108510 ("proyecto mejorado"), but the new SOW of this CRP project does not duplicate FEMA's SOW. All proposed activities that are part of this undertaking are outlined below with the approximate percentage of scope (area), amount of subsurface impact, and the specific SOW for each activity (Figure 24).

(1) Plaza Floor Materials

The approximate *Plaza* area is 35,000 square feet. The work will not require excavation below the existing *Plaza* grade. The scope of work includes removing the existing *Plaza* flooring and installing new flooring tiles that comply with the Americans with Disabilities Act (ADA). The new *Plaza* flooring will be designed to withstand vehicular traffic from service vehicles and equipment. The Municipality required the *Plaza* to be accessible to maintenance vehicles so that it can function as a venue for public events. One of such events is the "Fiestas Patronales" – historic and cultural festival that dates to pre-Hispanic times and is celebrated in the plazas of the 78 municipalities of Puerto Rico.

(2) Plaza Benches

The total quantity of benches to be added is twenty-three (23) and they will not require excavation below the existing *Plaza* grade. The existing metal park benches will be replaced with more durable and resilient seating.

Figure 23. Diagram of the existing lights created by IVA (2023).

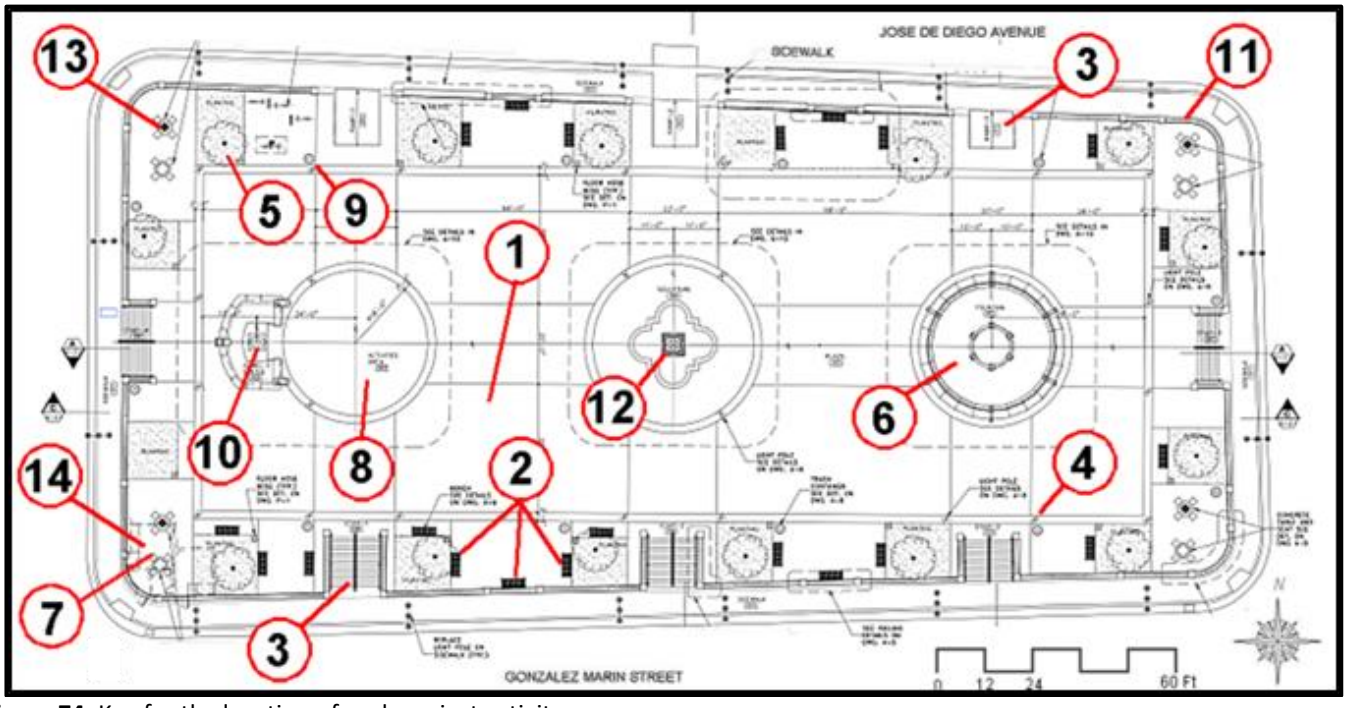

Figure 74. Key for the location of each project activity.

(3) Ramp and Stairs

The work will not require excavation below the existing *Plaza* grade. The scope of work includes improving the existing ramps and stairs to comply with ADA and safety standards. The improvements will include adding new non-slip floor tiles, safety bull-nose edging, new ADA-compliant pipe railings, and signage.

(4) Lighting

Lighting improvements consists of new poles and lights for 32 inside and 12 outside. The new lights need feeder pipes, which will require an excavation of 12 inches below the existing *Plaza* grade. This will replace lighting poles and lamps with resilient, power-efficient lighting. Some solar lighting will be considered, but it will not be the main lighting system. The bases and electrical piping for the new lights will not impact deeper than 18" below the existing planting grade levels.

(5) Landscaping Work

The approximate area is 4,800 square feet, and the new planting areas will require an excavation of 18" below the existing grade. The existing green planting areas will be expanded in size (approximately 300 square feet each). New decorative surface landscaping will be included at some planters.

(6) Fountain

The approximate area is 1,020 square feet, and the new planting areas will require an excavation of 18" below the existing grade. The scope of work is to rebuild and improve the Plaza fountain with the installation of a synchronized lighting system and new pumps and water jets. The location of the existing pumps will be discussed in detail next.

(7) Fountain Pumps and Electrical Controls

The new footings, electrical, and mechanical piping will require an excavation of 12 inches below the existing *Plaza* grade. This part of the project required a larger amount of design considerations and changes because of the difficulty in finding a suitable location for the Plaza's electrical panels and the fountain pumps and equipment, which complied with the project guidelines and the historical nature of the site. In order to reach a final decision, several design alternatives were presented to the project manager.

Alternative 1 consisted of a new small (12'-6" wide and 41'-6" long) permanent concrete building at the existing wooden kiosk's location along the northeast side. This building would have housed a shaded seating area, the new pumps for the fountain, and other mechanical and electrical panels. Alternative 1 would require minimal subsoil penetration (12" deep) and would provide excellent ventilation and maintenance access. It was rejected because it created a visual obstruction from the sidewalk to the *Plaza* and from the *Plaza* to the viewshed.

Alternative 2 consisted of using the central access stairs at the south of the Plaza to locate the electrical and mechanical rooms. This alternative also required minimal subsoil penetration and provided excellent ventilation and maintenance access. Alternative 2 was rejected because it occupied a stair that is considered an integral part of historic geometry.

Alternative 3 consisted of locating the proposed electrical and mechanical room on the southwest corner of the plaza, above the existing mechanical room. This alternative would require raising the ceiling of the existing mechanical room to the minimum required by the current building code (7 ft). The increased ceiling of the mechanical room would project into the plaza, with height below the precast railing and hidden with vegetation (live Spanish laurel hedge); a bench would surround the new volume. (Figures 25 and 26). This is the recommended alternative as discussed and agreed upon during the meeting dated January 21 between the Municipality, GM, and PM.

Alternative 4 consisted of locating the proposed electrical and mechanical room underground the *Plaza*; a new concrete vault buried underground and located on the northeast side of the fountain. This alternative would have no visual impact on the Plaza or the viewshed, but it would require the largest subsoil penetration, with the possibility of affecting archaeological resources since it would occur in the most sensitive area of the *Plaza*.

(8) Removal of the Existing Octagonal Gazebo

The work will not require excavation below the existing *Plaza* grade. The existing octagonal gazebo will be removed to create an open area where a movable (temporary) stage and other venue equipment can be installed for such events as the "Fiestas Patronales". This area will also serve as a large gathering space for activities not requiring such equipment. Electrical, water, and other "rough-in" will be provided.

Figure 25. Closeup of Alternative 3, which proposes a raised mechanical room ceiling that projects into the ***Plaza***[11].

Figure 26. Overview of Alternative 3, which proposes a raised mechanical room ceiling that projects into the ***Plaza*** [12].

[11] Images generated by the Designer (2025).
[12] Images generated by the Designer (2025).

The removal of the existing gazebo would not affect the historic character of the *Plaza* because it was constructed in 1990, and its location at the west side of the *Plaza* is not consistent with the original central location of the ca. 1898 gazebo.

Military and public gatherings are a tradition inherited from the Spanish social context and were altered by the 1898, 1959 and 1990 renovations. The remodeling ca. 1959 did not provide a large gathering space. Instead, the spaces for gatherings were occupied by two fountains. As a result, the smaller eastern fountain was usually covered with a temporary wooden platform to provide space for a stage. Finally, a concrete open stage with an "acoustic conch shell roof" was designed by local engineer Andres Hernandez and installed ca. 1965 at the east side of the *Plaza* (Figure 27).

The "conch building" highly deteriorated the visual integrity of the plaza by creating a visual obstruction of the view of the cathedral to the east. It was finally removed by the remodeling of 1990 by IVA and substituted by a fountain. The only remaining space (to the west) was occupied by the new octagonal gazebo. However, no large open space was provided. As a solution, a wooden platform was constructed on the east side of the gazebo to host public events (Figure 28).

The demolition of the gazebo will not require excavations, because the existing floor level of the gazebo floor is raised 18" above the *Plaza* level, and the existing column footings that penetrate the ground will be left in place. As recommended by the archaeologist, all new footings, primary and secondary cabling, and "rough-in" will be installed at 12" maximum depth below the existing Plaza level. Considering that the existing *Plaza* floor concrete slab has a thickness of 6" and the existing compacted sub-base is about 8" minimum, this provides enough space as not to affect any potentially intact cultural deposits below the fill layers.

(9) Trash Cans and Urban Accessories

There will be approximately 12 new trash cans added to the *Plaza*. The work will not require excavation below the existing *Plaza* grade. New and larger trash cans with the bodies made of pre-cast concrete will be installed on the north and south sides of the new *Plaza* layout. The new QR code plates with access to historical information, as provided by the Municipality Cultural Office, via a phone app will be installed. These small weather-resistant plates will be installed at the entrances to the *Plaza* and at three strategic locations: the fountain, the obelisk, and the Reina Isabel II sculpture.

Figure 27. Left - The "acoustic conch shell roof" taken by Maria Cashion (1988). Right - The "conch shell roof" looking to the east.

Figure 28. Wooden platform that was constructed in front of the existing octagonal gazebo.

(10) Reina Isabel II Statue

The area of the Reina Isabel II Statue is approximately 350 square feet, which accounts for approximately 2 percent of the scope. The new footings will require 18" of excavation below the existing *Plaza* grade. The original Reina Isabel II and the lying lion's sculptures will be restored and installed at the western side of the *Plaza* in a concrete and marble base surrounded by a garden. Originally, the sculpture was located at the center of the *Plaza* where the Luis Muñoz Obelisk is now located. Ms. Luz Badillo will perform the marble restoration work of all the historic sculptures.

(11) Fence/ Railing

The length of the fence/ railing is approximately 350 feet, which accounts for approximately 8 percent of the scope. The existing concrete and steel fence/ railing surrounding the *Plaza* is very deteriorated and will be removed. The existing metal decorative panels will be salvaged and stored by the Municipality. A new precast concrete coping railing will be installed, using a design depicting the form and features of the Art Deco design of 1979, to replicate its appearance. The new railing will rest over the existing footings/walls and will require 12 inches of excavation below the existing *Plaza* grade.

(12) Obelisk

The area of the Obelisk is approximately 300 square feet, which accounts for approximately 1 percent of the scope. No excavation will be required below the existing *Plaza* grade. The existing planting and low wall surrounding the central obelisk will be maintained as it is the only element remaining from the *Plaza* designs of 1979. A plaque with historical information prepared by the Municipality Cultural Office will be installed. Penetration of the plaque base will be less than 12" below the *Plaza* level. The original concrete vases that surround this planting will not be recovered, as they are now located on private property.

(13) Tables and Chairs

The area for tables and chairs is approximately 300 square feet, which accounts for approximately 1 percent of the scope. No excavation will be required below the existing *Plaza* grade. Eight small prefabricated permanent tables and chairs will be installed in the designated areas around the *Plaza* to provide seating. The tables will be provided with domino/ chess boards.

(14) Electrical, Communications, and Plumbing

The electrical, communications, and plumbing infrastructure will require 18 inches of excavation below the existing *Plaza* grade. The existing electrical, communications, Wi-Fi, plumbing, and drainage infrastructure will be improved and/or totally changed when not in compliance with the code or if it is totally damaged.

The improvements will consist of the several activities outlined below. New electrical systems will be installed: transformers, panels, primary and secondary conduits, and cables. A new secondary safety switching, timer, and computer control panel located at the new mechanical room building will feed the fountain pumps, lights, and the plaza pole-mounted and decorative LED lights. The new secondary distribution piping will be buried no more than 12" beneath the existing *Plaza* level. The existing potable water distribution system will be abandoned in situ as it has many leaks. A new potable water piping and distribution system will be installed. All new piping will be buried no more than 12" beneath the existing *Plaza* level. The existing surface-level storm drainage will remain, but the slope of some areas will be improved so that water will flow more efficiently.

In conclusion, the project area is composed of individually NRHP-listed and NRHP-eligible properties within the Arecibo TUC, which is a NRHP-eligible district. A more detailed breakdown of the Direct APE, Indirect APE, and the properties will be provided in subsequent sections of the Section 106 NHPA EDF.

Area of Potential Effects

As defined in 36 CFR §800.16(d), the APE is the geographic area or areas within which an undertaking may directly or indirectly cause changes in the character or use of historic properties if any such properties exist. Based on this definition and the nature and scope of the Undertaking, the Program has determined that the Direct APE for this project is within the Arecibo TUC. The Direct APE consists of the parcel boundary of the *Plaza* and the sidewalk located to the east of the *Plaza* in front of the San Felipe Apostol cathedral between José de Diego Avenue and Gonzalo Marín street, as well as the sidewalk located to the west side of Calle Palma between José de Diego Avenue and Gonzalo Marín street (Figures 29 and 30).

The Puerto Rico State Historic Preservation Office (PRSHPO) considers all TUCs eligible for inclusion in the NRHP, based on their association with significant historical events and their embodiment of distinctive architectural characteristics related to urban development. The Arecibo TUC, with its urban layout, streets, buildings, and open spaces, holds historical value and is intricately linked to the founding, development, and unique history of Arecibo. This recognition underscores the importance of preserving these areas that contribute to the rich tapestry of Puerto Rico's heritage and history.

The *Plaza* occupies an irregular rectangular shaped polygon with the Direct APE measuring approximately 272 feet 6 inches east to west at the center and measuring approximately 127 feet 6 inches north to south on the west side and 111 feet 6 inches on the east side (Figure 31). The area of the *Plaza* is approximately 32,340.5 square feet (3,005.62 square meters), and the area of the sidewalk to the west and east of the *Plaza* is approximately 6,334.0 square feet (588.66 square meters), which brings the total area of the Direct APE to approximately 38,674.5 acres (3,594.28 square meters). Additionally, the staging area is considered part of the Direct APE, and it is located within the boundary of the *Plaza* on the northwest side (see Figure 29).

The Indirect APE (view-shed) is the viewshed of the project and extends along the lots on each side of José de Diego Avenue, Betances Street, Gonzalo Marín Street, Palma Street, and Maria De Hostos Street and measures approximately 573 ft (175 m) east to west by 358 ft (109 m) north to south (See Figure 29). The Indirect APE is defined by the current 3D spatial configuration of the buildings surrounding the *Plaza* that limits the visual APE due to their height and volume (Figure 32). The built environment of the Indirect APE is a mix of residential, government, recreational, religious, and commercial properties. An assessment of effects on both the individual properties and the Arecibo TUC will be thoroughly discussed in later sections of the EDF.

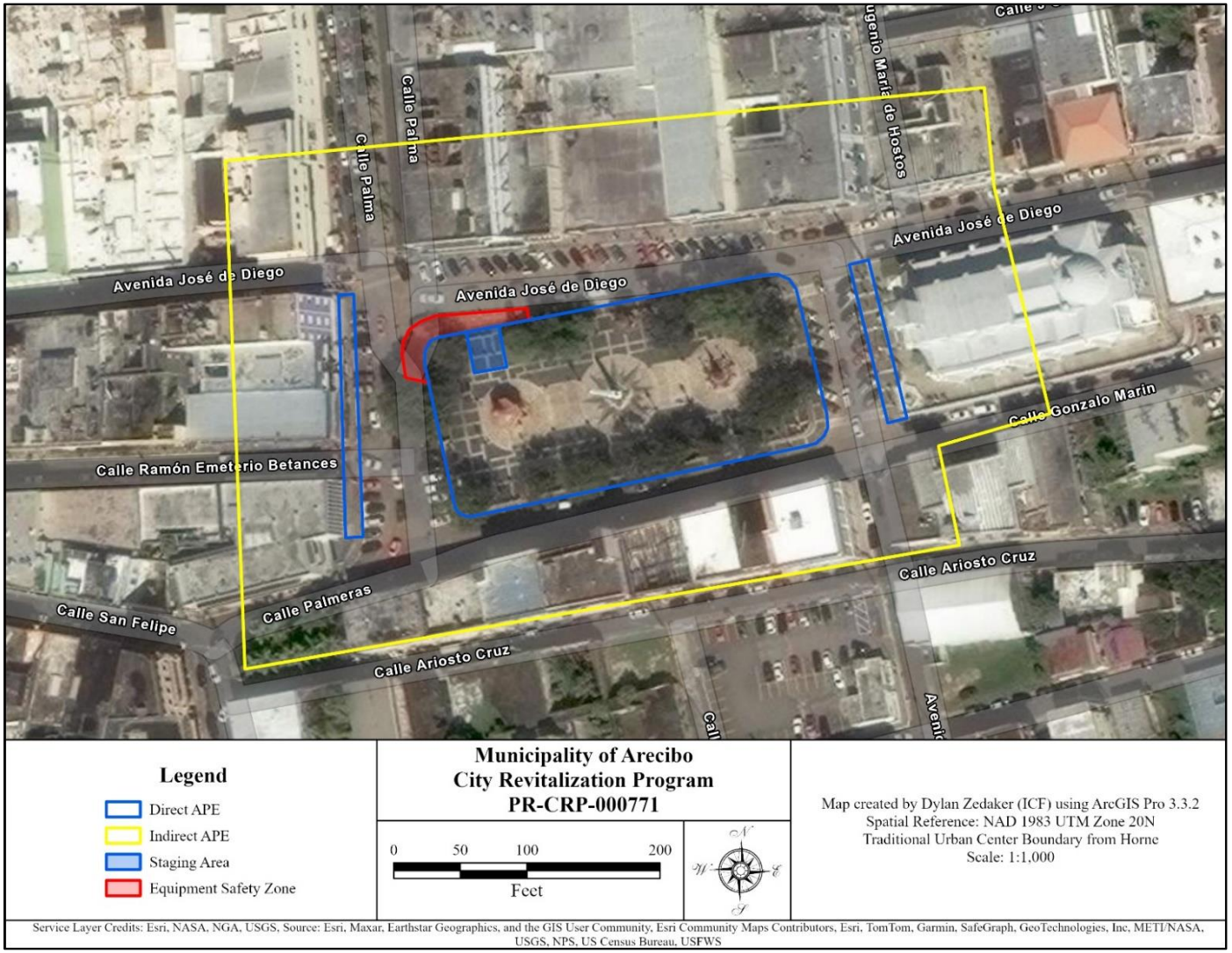

Figure 29. Project (Parcel) Location – Area of Potential Effect Map (Aerial)[13]

[13] Figure produced by Dylan Zedaker (ICF)

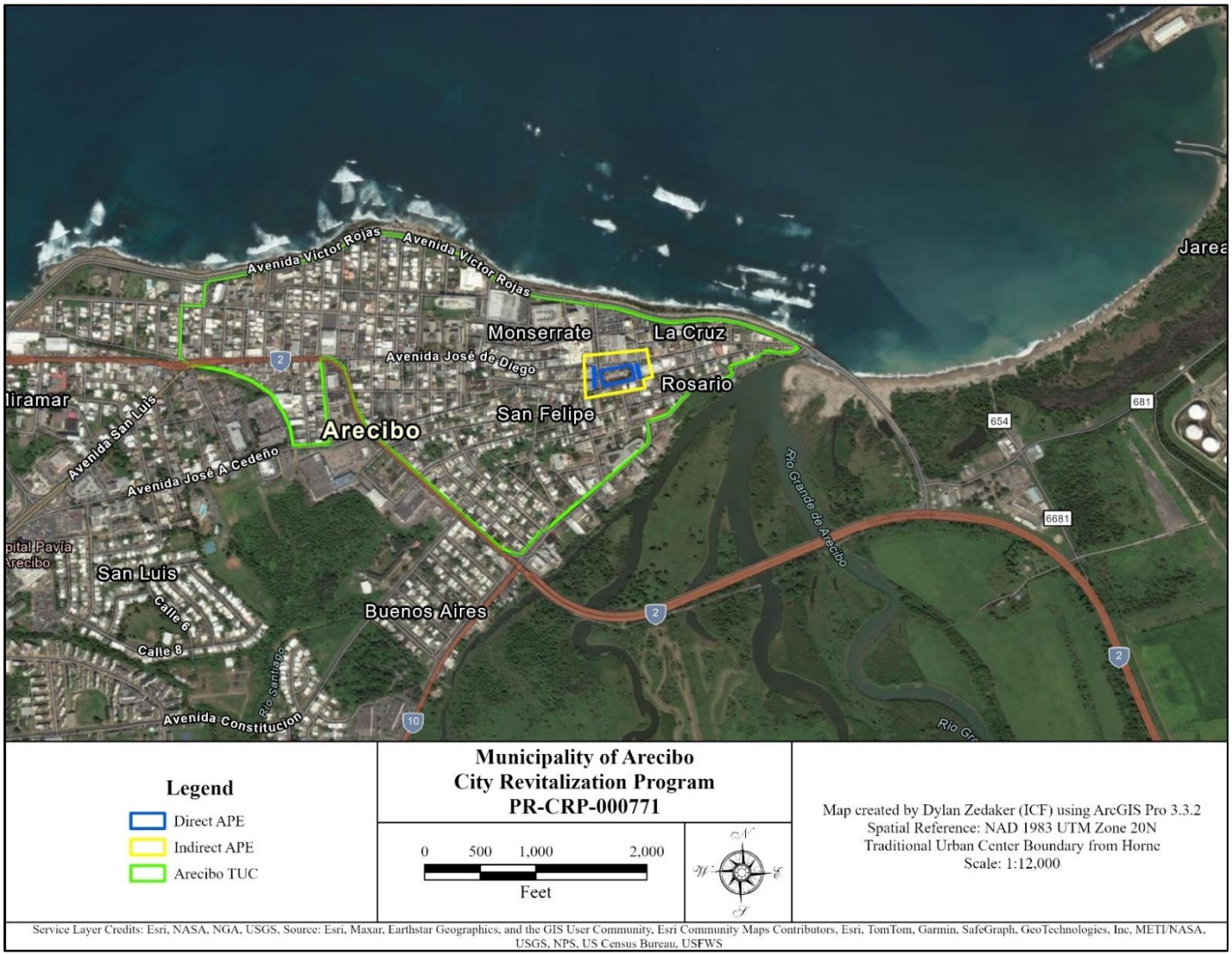

Figure 30. Project (Parcel) Location – Aerial Map[14]

[14] Figure produced by Dylan Zedaker (ICF)

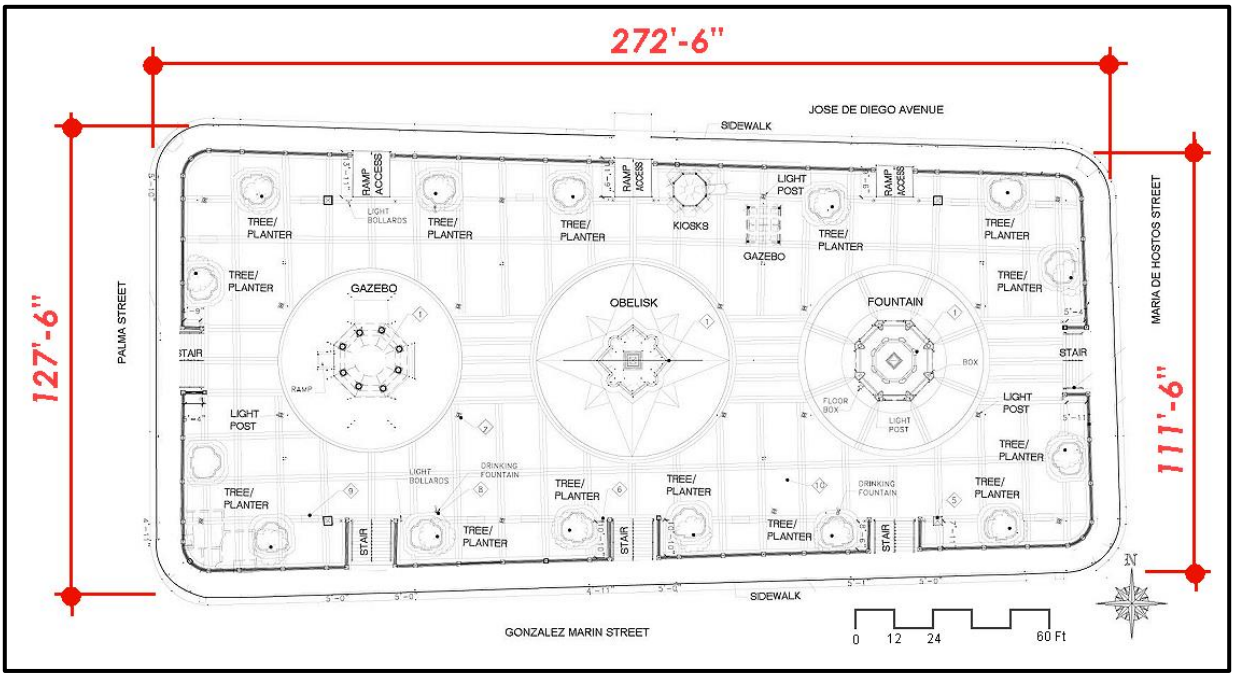

Figure 31. – ***Plaza*** plan with Dimensions.

Figure 32. – A 3D visual representation of the ***Plaza*** inside the town center, created by the Antonio Pontón González using 3D modelling software, Google Earth 3D satellite imagery and Cadmapper 3D satellite height information.

Environmental Setting

The Arecibo Municipality is in the geomorphological region of Puerto Rico's northern coastal plain, an area that includes a variety of environments, such as coastal fringe, alluvial valley, karst hills (mogotes), and small valleys located among karst hills. The coastal plain is limited to the south by high cemented dunes, followed by valley lowlands and interior alluvial valleys of the northern karst and limited to the North by the Atlantic Ocean. Arecibo sits at the mouth of the Arecibo River and is characterized by frequent flooding and significant deposition of sediment. This riverine environment provided ample resources for human settlement since early Prehistoric to Colonial times and indicates the potential for deeply buried archaeological resources.

Soil data in the APE was assessed and mapped based on the Web Soil Survey online database from the United States Department of Agriculture as shown in Figure 33 (USDA 2025). The soil within the APE is currently classified as urban soil (UI-Urban land). This soil classification is true for the entirety of the developed portion of Arecibo. However, the development terminates at the Arecibo River, and soils to the east of the river are representative of the native soils that would have underlain Arecibo before urban development. These soils include Toa silty clay loam (To) a well-drained soil that is formed from stratified alluvium derived from igneous, metamorphic and sedimentary rock with 0 to 2 percent slopes; Coloso silty clay (Co) a somewhat poorly drained soil that is formed from stratified silty and clayey alluvium derived from volcanic and sedimentary rocks with 0 to 2 percent slopes; and Bajura clay (Ba) a poorly drained soil that is formed from clayey alluvium derived from igneous, metamorphic, and sedimentary rock with 0 to 2 percent slopes. All three of these soils have increasing clay content with depth, experience frequent flooding, and feature a typical profile that shows the A-horizon from 0-15 inches below surface, the B-Horizon from 15-40 inches below surface and the C-Horizon from 40 to 80 inches below surface. Depending on the degree to which the urban land soils within Arecibo have been disturbed from urban development, the soils within the APE are most likely modified versions of the native silty clay soils to the east of the Arecibo River.

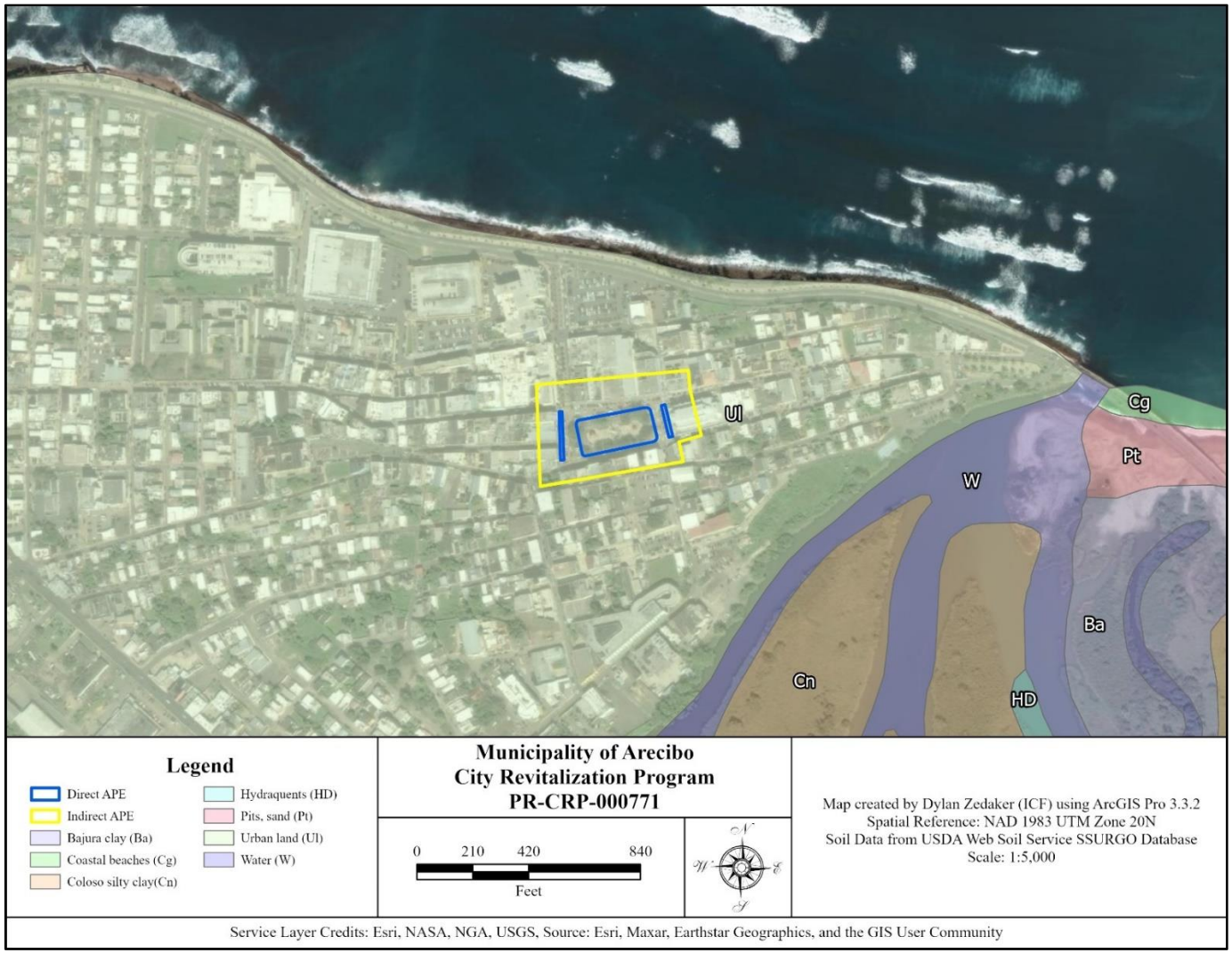

Figure 33. Project (Parcel) Location – Soils Map[15]

[15] Figure produced by Dylan Zedaker (ICF)

Historic Context/Cultural Setting

Prehistoric Period

The variety of environments in Arecibo allowed for the exploitation of ample resources for the early inhabitants of the island. Archaeological investigations in the area have documented a total of 122 sites, spanning from the Archaic period to the 19th century. These include fifty (50) Pre-Columbian sites, sixty-three (63) historic sites, and nine (9) multi-component sites. These sites demonstrate the occupation of Arecibo during all known chronological periods in Puerto Rico. In Puerto Rico, the Pre-Columbian chronological periods consist of the Archaic, Ceramic, and Historic periods (Rouse 1952). The earliest sites documented for Arecibo are Cueva del Abra (AR0100002) and Cueva Ventana (AR0100014) from the Pre-Arawak culture dated to the Archaic period (PRSHPO 2016). Cueva Ventana consists of five rock art panels that contain twenty-four (24) petroglyph elements and six (6) pictograph elements. Additionally, there is an archaeological deposit consisting of stone, coral files, shell, Pre-Arawak ceramics and carbonized food remains, which have provided relative dates of 2040 to 950 BC.

The Ceramic period for this area is represented by Agro-Pottery I, II, and III habitation sites such as El Caney (AR100005), Río Tanamá Site 1 (AR0100038), Río Tanamá Site 2 (AR0100039), and rock art sites containing petroglyphs and pictographs such as Miraflores Cave (AR0100001), Cueva del Indio (AR0100003), Cueva Ventana (AR0100014), and Cueva Los Nepos (1 AR0100022). El Caney (AR100005), which has been the subject of numerous archaeological studies, represents a Ceramic period site. Most notably, diagnostic materials recovered indicate three stages of Pre-Columbian habitation through the identification of the Saladoid series, the Ostionoid series, and the Chicoid series (Aresti 1951). Río Tanamá Site 2 represents an Agro-Pottery I and II habitation site (Late Saladoid/Early Ostionoid, ca 400-800 AD). The archaeological deposit contains Cuevas and Ostiones ceramics, faunal remains, human remains, and a variety of lithic tools and debitage. The habitation sites are largely located in proximity to the waterways with El Caney located near the mouth of the Arecibo River and the Río Tanamá Sites 1 and 2 located further upstream in the interior alluvial valley along the Tanamá River, which is a tributary of the Arecibo River. The rock art sites are situated across various environments including the coastal plain (AR010003), the interior alluvial valleys of the northern Karst (AR0100001 and AR01000014) and within the Karst hills (AR0100022).

The Historic period is represented by a variety of cultural resources associated with the events from contact between Europeans and native cultures during the 16th century, the construction of local industry and the built environment of the modern Arecibo urban core. An example of

a multicomponent site dating from the Ceramic period into the Historic period is El Caney (AR100005), which persisted until development of the modern city of Arecibo. A variety of other multicomponent sites exist including Finca Valencia (AR0100045), Paseo Víctor Rojas (AR0200009), the Palace of the Marquis of las Claras (AR0200008), the Old Hydroelectric Plant of Arecibo (AR0100021), and a variety of sugar mills and estates some of which still exist. The majority of these multi-component sites are situated along the margins of the Arecibo River and secondary rivers. Due to the consistent habitation of Arecibo from the Ceramic period to the Historic period and into the modern day, many of the current structures within Arecibo are immediately overlying prehistoric components of archaeological sites. Additionally, the successive layers have often been disturbed from modern construction resulting in palimpsest archaeological stratums where it is difficult to distinguish original Pre-Columbian components of the site from later Historic components.

In summary, there is archaeological evidence for human occupation of the Arecibo region from the Archaic period, through the Ceramic Agro-Pottery periods I, II, and III into the Historic-Colonial period up to the 19th century.

Historic Period[16]

There is archaeological evidence that a prehistoric settlement, presently known as El Caney, existed in the area now occupied by the *Plaza*, extending towards the area presently known as La Puntilla (the eastern sector of the urban core closest to the rivers system).[17] This information is significant for it evidences early European settlements (Arecibo is the fourth[18] oldest settlement in the Puerto Rican Archipelago) may have been established in places previously occupied by the Natives, a cultural superimposition that goes against the traditional interpretation that there existed urban segregation between colonizers and colonized

Although it is known a Spanish settlement existed as early as the first decades of the 16th century at the Native village known as Aracibo and Abacoa,[19] next to the present-day Río Grande de Arecibo sector, the town of Arecibo was formally founded on 1 May 1616 under the

[16] The Historic Period of the historic context of the "Section 106 Effects Determination Form (EDF) PR-CRP-000771 (Plaza Luis Muñoz Rivera, Arecibo, Puerto Rico)," authored by Dr Arleen Pabón-Charneco, is based on the historic contexts prepared by her for ICF for the "Section 106 NHPA EDF project PR-CPR-000772 (Plaza Buenos Aires, Arecibo, Puerto Rico)" and the "Section 106 NHPA EDF for project PR-CRP 000768 (Streets Rehabilitation, Arecibo, Puerto Rico)." Additional research was needed to interpret Arecibo's Luis Muñoz Rivera Plaza. A technical review of the historic context was performed by Dr Karen Anderson-Córdova and Ms Berenice Sueiro-Vázquez, members of the Historical Compliance Consulting (HCC) team.

[17] The Río Grande de Arecibo and several other rivers form the system.

[18] Some historians claim Arecibo was the third Puerto Rican town to be formally founded.

[19] The name of Arecibo may derive from Aracibo, a tribal chief (in Spanish, *cacique*) who once ruled the region..

governorship of Felipe de Beaumont y Navarra (1574-1626). At that time, the name given to the embryonic town was Aldea de la Ribera del Arecibo, a descriptive designation establishing it was a very small settlement (hence the use of the word *aldea* or village and not *pueblo* or town) located on the shores (*ribera*) of the Arecibo River. By 1647, it was called San Felipe del Arecibo by Diego Torres Vargas (1590-1670) in his first comprehensive history of Puerto Rico. (To this day San Felipe [St. Philip] is the patron saint of the Arecibo Municipality.) Regardless of dates and names, Arecibo did not formally become a town until the 18th century.

The Spanish town was located on a low plateau along the north shore facing the Atlantic Ocean and the wide Ensenada de Arecibo. To the east, the mighty Río Grande de Arecibo and secondary waterways, as well as their tributaries, are found (Figures 34 and 35). Through the centuries, visitors have found the place extremely beautiful.[20] To this day the seascape can only be described as mesmerizing. During the 16th century, Torres Vargas mentioned many called the area the Golden Garden (in Spanish, *Jardín Dorado*). Friar Iñigo Abbad y Lasierra (1745-1813), in turn, described it as: *una región que admira y embelesa la vista, más bella que las imaginadas de Circe y de Calipso*.[21]

At present, the name of the Arecibo Municipality includes the *Muy Leal* (Very Loyal) honorary designation, granted by the Spanish Queen Isabel II (1830-1904) in March 1850. The appellation honors the bravery of the townsfolk in defending Arecibo against Spain's enemies. One of these individuals, Captain Antonio de los Reyes Correa (1665-1758), fought the 1702 British attack with such bravery that to this day the town is nicknamed "Arecibo: the town of Captain Correa" (*la villa del capitán Correa*).

Despite the bay's defensive issues, it served as a port that connected the region with the outside world. In the 18th century plan, the settlement's relevance as midpoint between the capital (San Juan) and the place where water was obtained before the Atlantic crossing (Aguada de San Francisco)[22] is underscored (see Figure 34).

---

[20] The Milwaukee Deep, the deepest part of the Puerto Rico Trench which, in turn, is the deepest part of the Atlantic Ocean, is found approximately 76 miles north of Arecibo.

[21] Translation into English: "[A] sector which seduces for its beauty, far more exquisite than the imagined regions inhabited by Circe and Calypso." Torres Vargas and Abbad y Lasierra are quoted in Francisco M Cadilla, *Los ochocentistas* (Barcelona: Ediciones Rumbos, 1961), 11. Circe and Calypso are references to Homer's *The Odyssey*.

[22] The map still uses "San Juan de Puerto Rico," the original name given to the island by Christopher Columbus in 1493 when he first visited it.

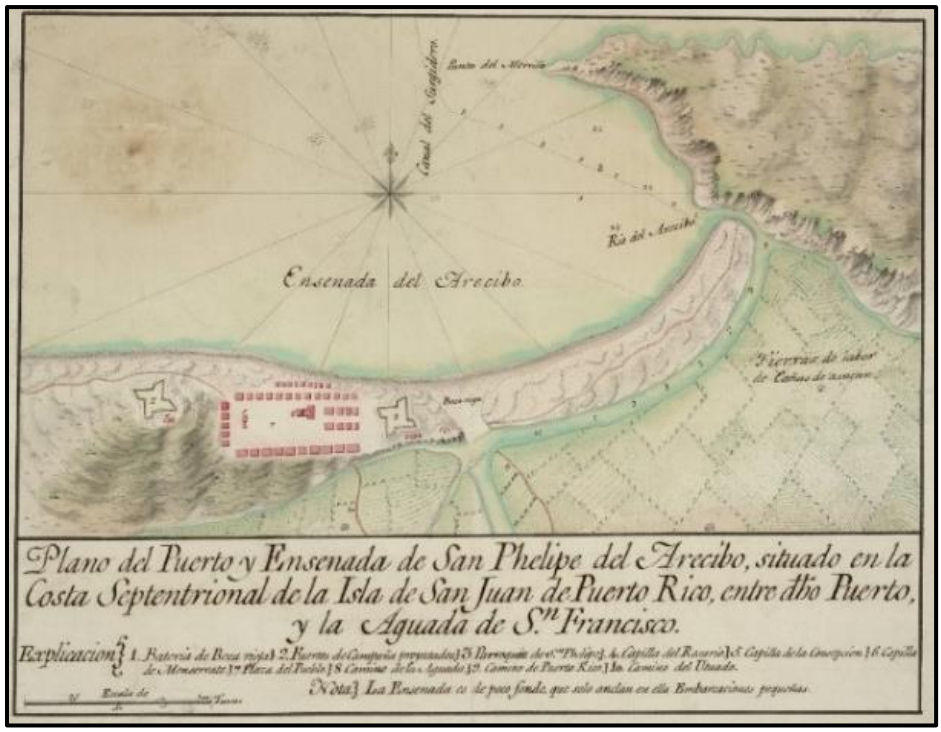

Figure 34. Plano del Puerto y Ensenada de San Phelipe [*sic*] del Arecibo," Puerto Rico, 18th century (AR_J_T_4_C_2_74).

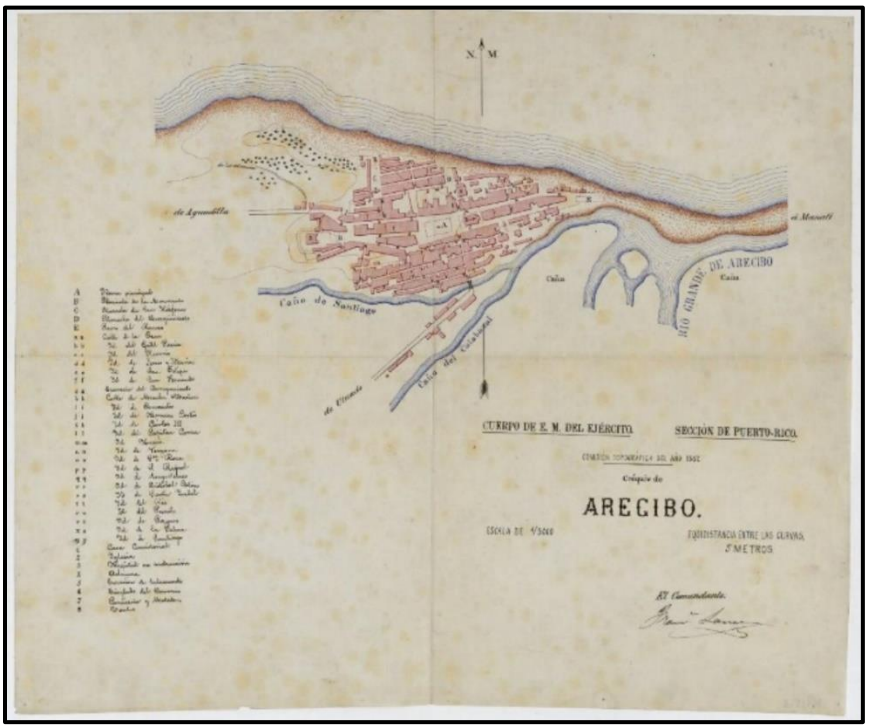

Figure 35. Arecibo, Puerto Rico, 1887 (AR_J_T_4_C10).

Therefore, as early as the 18th century, Arecibo was considered essential to sea traffic. This relevance lasted until the 20th century. As early as the 18th century, agricultural fields surrounded the urban core, making possible the development of numerous haciendas, many dedicated to the cultivation of sugar cane. Some enclaves that developed during the 19th century are the Hacienda Cambalache (established in 1841), Hacienda Santa Barbara (established in 1841), Hacienda Islote, and Hacienda Puente Bagazo (established in 1812), among others.

Commercial ventures made ample use of the rivers system and the wide, albeit shallow, bay made Arecibo a vibrant port. As late as the second half of the 19th century, the sector was described as full of life. *Surcaban la vía fluvial yolas, lanchas, botes de vela y motor, que le impartían animación y colorido. A la altura del pequeño poblado del Pasaje, peatones, ganado y vehículos cruzaban de una a otra orilla, utilizado el pintoresco ancón de los Marín*.[23] It is safe to assume the first formal bridge to cross the Río Grande de Arecibo dates to the 19th century. The first automobile bridge was built during the 1920s.

An extraordinary level of commercial activity, which grew stronger with time, allowed connections with the rest of the world. The varied cultural exchange is evidenced in Arecibo's sophisticated architectural and urban typologies, some of which are unique to the Archipelago. The power of sophisticated financial and social groups is also reflected in the urban landscape. The heart of all this activity was Arecibo's public plaza which during the early days played multiple roles from church atrium to market to recreational area.

<u>The 18th Century Town Plaza and its Urban Context</u>

The rare and exceptional 18th century preserved plan of Arecibo depicted above helps the study and understanding of the original urban arrangement, as well as the interpretation of the exceptional protagonist role played by the public plaza (in Spanish, *plaza pública*).[24] (see Figure 34) Guarded by two small forts, the rectangular urban area was organized on top of a knoll which allowed refreshing breezes to be felt, as well as the enjoyment of magnificent

[23] Francisco M Cadilla, *Los ochocentistas* (Barcelona: Ediciones Rumbos, 1961), 31. Translation into English: "The river was packed with all sorts of vessels which provided movement and activity. Close to the small settlement of Pasaje, people, cattle and vehicles crossed from one side to the other using the picturesque Marín ferry."

[24] Public plaza was the name given to town plazas as early as the 16th century. In terms of the Puerto Rican Archipelago, the first use of the term was in the context of San Juan (at present known as the Old San Juan Historic District). San Juan's present-day Plaza de la Catedral was described in this manner. Arleen Pabón-Charneco, "National Register of Historic Places Nomination of the Old San Juan Historic District" (MS: Tallahassee, Florida, 2012) and Arleen Pabón-Charneco, *The Architecture of San Juan de Puerto Rico Five Centuries of Urban and Architectural Experimentation* (London: Routledge, 2017).

views. The high placement also protected (albeit not completely) from the perennial floods caused by the rivers system. While the town perches next to the old mouth of the Río Grande de Arecibo, it suffered seasonal flooding since the rivers and their tributaries meander between both mouths.

In Spanish colonial times, no town could exist without a cemetery. Although a traditional burial ground, inaugurated in 1864 and located on PR-2 (a site that is eligible for inclusion in the NRHP under Criteria A, B, and C, and Criteria Consideration C and D), still exists, the town core includes at least five prehistoric and historic burial sites.[25] One of these is San Felipe Cathedral where bodies were buried for centuries. Prehistoric as well as historical interments have been found in other intraurban sites, including the area where the town plaza is today. Pre-contact burials at the plaza evidence the existence of the Native *yucayeque* previously mentioned.[26] Historic entombments, on the other hand, may point to settlements which may have existed prior to the formal foundation of the town. It is also possible that the area around the church was used as a cemetery during the early stages of urban development. Although not common in Spain, this was a European tradition. While burials inside the church were quite common, this was usually reserved for members of the clergy and aristocracy.

As mentioned, Arecibo's urban and architectural uniqueness was underscored by the fact that, as early as the 18th century, it had two forts to defend the settlement. The space for the original urban area was roughly rectangular with the longer axis running from east to west and anchored by a large oblong lot where the public plaza and the church were located (Figure 36). At the time of the founding there was at least one small chapel on the west side of the plaza, opposite the church (See Notation Number 5 included in the map depicted in Figure 34). It is possible this religious building existed since the early days of the settlement when the town had still to be formally plated (The small chapel no longer exists).

The east-west orientation exhibited by both plaza and church responds to the fact that the altar area (apse) of the temple had to face east and the rising sun. This millennia-old imperative established not only the direction of the church but the orientation of the plaza since it was aesthetically and functionally convenient for the westwork (common name for the west façade of Christian temples) to face the public square that also served as atrium.[27]

---

25 It is highly probable another burial place may have existed before the 19th century one.

26 *Yucayeque* was the name given by the Natives to their villages and settlements.

27 Atria, open spaces where the community could meet, were a common feature of Christian churches since the 4th century.

Figure 36. Arecibo Town Plaza, 2nd half of the 20th century (Google.com)

The arrangement reflects the preeminence of the church regarding the urban organization (see Figures 35 and 36). The church and plaza were located within the same urban block and there was no street separating them. With time, most towns inserted a street between the two properties.[28] As mentioned, this spatial fluidity between the two properties allowed the plaza to act as a religious atrium whenever necessary.

The original iteration had no trees or decorative elements, such as fountains, sculptures, or obelisks. It would be correct to assume the plaza had limited recreational use until the 19th century, when the concept of relaxation within the public sphere emerged. Most importantly, the plaza had no streets surrounding it (see Figure 34). This now-gone arrangement explains the use of the Spanish phrase "within the plaza" (in Spanish, *en la plaza*) in many historic descriptions for churches as opposed to "in front of the plaza" (in Spanish, *frente a la plaza*). The no-streets-framing-the-plaza urban morphology presents a dramatic contrast to contemporary arrangements found throughout the Archipelago that include streets on all four sides of historic squares. As mentioned, it also is common for the church to be separated from the plaza by means of a street.

[28] Only a handful of Puerto Rican towns, like Florida, still have the two properties within one lot.

It is possible to establish that during the 18th century the plaza's most relevant decoration was the church west façade. It is also widely known that in some cases it took decades and even centuries for towns to finish their respective churches. An analysis of these buildings reveals several important facts. First, all were Catholic churches, since this was the official religion of the Spanish Crown. As such, traditional architectural treatments based on Late Renaissance ideals were common. Second, the expectation was to have a monumental building, even if not all towns achieved this goal. As was the case in Medieval times, the church building was interpreted as the town's "brand," an interpretation that is also valid for a town's plaza.) While in most towns, plazas and churches were conceived as large-scale sites and buildings (when compared to some towns' sizes), Arecibo's tandem is exceptional in terms of its size, as well as its architectural and urban elegance[29].

The Arecibo temple was influenced by Sebastiano Serlio's interpretation of what a 16th century church façade ought to be.[30] As known, Serlio's The *Five Books of Architecture* (1535-1575) inspired ecclesiastical design throughout Europe, particularly in Spain. He was one of the principal academic sources used by the Real Academia de Bellas Artes de San Fernando in the teaching of architecture.[31] His treatise was also considered an essential educational source when the first royal engineering centers were created early during the 19th century. Arecibo's principal church, therefore, is influenced by Cinquecento (16th century) Italian aesthetic semantics.[32] At this point, it is relevant to underscore the Arecibo church was finished during the second half of the 18th century. With time, it has been transformed several times, principally due to earthquake activity.

---

29 This seems to be a tendency of smaller town plazas during the late decades of the 19th and early ones of the 20th centuries.

30 Sebastiano Serlio (1475-1554), one of the first international Italian architects, was considered one of the most important architectural theorists, before and after his death.

31 The Real Academia de Bellas Artes de San Fernando was founded in Madrid by royal decree dated 12 April 1752. The institution was charged with the teaching and professional supervision of painters, sculptors, and architects.

32 Aesthetic perceptions related to architectural styles vary with time. An early 20th century description of the San Felipe Cathedral established: *La rotonda del ábside y galerías laterales, podrían clasificarse como de estilo romano; la fachada (frontispicio), no obstante reducido capitel dórico que la exorna [sic], parece responder al estilo Misión (derivación del colonial español), usado en California*. Francisco M Cadilla, *Los ochocentistas*, 143. Translation into English: "The dome of the apse and lateral galleries can be classified as an example of the Roman style, the façade even with its reduced Doric capital seems to belong to the Mission style, a derivation of the Spanish Colonial used in California."While there is no such thing as an 18th century "Roman style," the Californian Mission semantics dates much later than the time when the Arecibo church was erected. The same applies to the "Neoclassical" appellation, incorrectly used at times. If a name is needed, Neo-Cinquecento is the appropriate one.

19th Century Town Plaza and its Urban Context

As mentioned, during the early days, most Puerto Rican towns had no streets framing the plaza. When no streets separate the square from the rest of the town, the site completely integrated into the urban fabric creating an urban transparency that underscored the site belonged to all. In other words, at the time of the town's foundation, the plaza and the surrounding buildings, including the church, were treated as one urban organism. The passerby could walk from one place to the other without any architectural features to mark a difference. By 1887, however, the Arecibo Plaza and the church were treated as separate entities (Figure 36).

While at this late date the streets surrounding the plaza were still not formally plated, both the church and the square were surrounded by fences of some sorts that clearly delineated their respective areas, separating them from the thoroughfare areas surrounding them (see Figure 36). These fences – which are not present in the 18th century plan, also separated the plaza from the church. A possible reflection of the growing liberalism (and anti-clericalism) experienced by Spanish society during the 19th century, the plaza was underscored as a unique place and not a functional appendix of the church. Additionally, the fence seclusion abandoned the traditional prominence given to the church, principally created by the long axial emphasis provided by the plaza. By the late 19th century, this hierarchical relationship was no more. As a result of the new, albeit relatively simple, arrangement the church lost prominence in terms of the urban core. Physically and visually separated from the plaza, it transmuted into one more building within the urban fabric.

The concept of the town plaza in the Archipelago experienced several transformations during the 19th century. Probably the most relevant one was that many plazas were now interpreted as parks. This novel approach introduced vegetation. Landscape features not only included parterres but the planting of trees that provided shade. Without this treatment and considering the characteristic sunny weather the Archipelago enjoys it would have been impossible to recreationally use the plaza. Benches and light poles became common, providing a place for the public to sit. The idea of the urban core as provider of recreational spaces for the masses is a late 19th century development.

The period interpreted the plaza in a different aesthetic manner than previously. It is at this time that all sorts of decorative objects are added. Extremely favored, albeit rare for their cost, were sculptural images. In some cases – the San Juan Plaza de Armas comes to mind – they were allegorical figures, like the Four Seasons. In Arecibo, Queen Isabel II was selected to both

decorate and act as a reminder of who held the real power. The cost of sculptures – which had to be imported from Europe – is evidenced by the fact that only a few towns displayed this interest in beautification. Most towns enjoyed an extremely limited budget and could not afford – like San Juan – an array of sculpted figures not only for the principal plaza but for some of their secondary squares (Plaza de San José received a bronze sculpture of Juan Ponce de León when a stone one of Christopher Columbus was placed at the present-day Plaza de Colón).

During the 19th century, pavements for plazas were introduced, replacing the previously packed earth surface. In Arecibo, formal stairs to access the plaza were also added since the inclined terrain required one on the west side of the square. In some cases, like San Juan, the traffic surrounding the plaza everyday was so heavy, the plaza was raised to protect the users from the carriages circulating around the site. Governor Juan de la Pezuela y Cevallos (1810-1906) masterminded the complete rehabilitation of the capital city's Plaza de Armas. Including this type of treatment, the square (and the governor) became the butt of all sorts of jokes as the site was colloquially labelled "Pezuela's Pantheon." During the 19th century, the Arecibo iteration formalized its enclosure by means of a decorative fence. A pavilion or gazebo was also a way to decorate a plaza. However, this was not a standard decorative element since only a handful of municipalities could afford such an extravagance. Another transformation of Arecibo's plaza's character and personality that took place during the mid-19th century is that the site was labelled Principal Plaza (in Spanish, *Plaza Principal*). In the 18th century plan the site was identified as the town plaza (in Spanish, *plaza del pueblo*) (see Figures 34 and 36). By this time, Arecibo had several places known as *plazas*, as well as *plazuelas*[33] (Table 1).

The changing names of the town plaza provide a summarized historic account of Puerto Rican culture. As mentioned, the earliest original name recorded for such plazas is town plaza (in Spanish, *plaza del pueblo*) and public plaza (in Spanish, *plaza pública*). A third early name is main square (in Spanish *plaza mayor*), as well as principal plaza (in Spanish, *plaza principal*) and recreational plaza (in Spanish, *plaza de recreo*). During the 19th century, several such spaces were named in honor of Queen Isabell II, the first woman to reign in Spain since the 16th century. Another favored appellation used, for example, in San Juan for the now Plaza de Armas, was Constitution Plaza (in Spanish, *plaza de la Constitución*). Name changing took place regarding all kinds of plazas, not just the town plazas.

[33] Cynthia Velázquez, *Arecibo . . . Así era* (Ponce, Puerto Rico: Imprenta Las Américas, 1998). According to the *Diccionario de la Lengua Española* (Madrid: Real Academia Española, 2024), word: *plazuela*.

Table 1. Selected Plazas and Plazuelas within Arecibo's Historic Urban Core

HISTORIC NAME(S)
Plaza Mayor Plaza de Recreo Plaza de Isabel II (c 1860) Plaza Baldorioty de Castro Plaza Luis Muñoz Rivera (1st half 20th century)
Plaza del Corregimiento[34] Plaza Francisco Jauregui
Plazuela San Felipe Plazuela Eugenio Sánchez López
Plazuela de La Magdalena Plazuela José A Maquiavelo
Plazuela de la Marina Plazuela de la Libertad Plazuela Manuel Pérez Avilés
Plazuela de La Monserrate Plazuela Manuel Ledesma

During the second half of the 19th century, entrances to the Arecibo urban core from all cardinal points were formalized. In Arecibo, regardless of the direction the visitor was coming from, they traversed the urban core until they arrived at the plaza area. By 1900, the transitional area between plaza and church, depicted as early as 1867, was transformed into a street, known as Calle del Principal and Calle Mayor (present day María De Hostos Street[35]). The thoroughfare connected present-day José de Diego Avenue (on the north side of the plaza) and the Gonzalo Marín Street (on the south side).

This organization is interesting and evidences the transformations the urban core underwent throughout the centuries. At some point during the 19th century, probably after PR-2 was partly organized, the area between plaza and church became a formal street connected to the trail which provided entrance to the city (from the south and east), once the rivers and the tributaries had been crossed (present day Juan Rosado Avenue or PR-10). It also was connected to the street that provided the principal exit (or entrance from the north and west) to the town core, the José de Diego Avenue. All visitors, then, followed routes that met at the plaza.

[34] The *Corregimiento* represented the Crown in the colonies.

[35] Some sources establish the real name of this street is Eugenio María de Hostos. If this is correct, it would have the same name as the street bordering the north side of the plaza. In other words, the street dividing the church and plaza was considered part of the Calle Mayor, the principal street of the town.

A unique Arecibo urban characteristic which seems to have existed since its foundation until the middle of the 20th century appears as early as the 18th century drawing: the use of the northern side of town, the one facing the ocean, by the impoverished social class (Figure 37). Known by several names, the Barriada del Mar-La Playa developed after 1838 sandwiched between the sea and the plaza. The area's closeness to the Atlantic caused continuous destruction by sea waves, one of the reasons the sector was not used by the more dominant classes. By the early years of the 20th century the slum was divided into sectors: Jareales, Palmarito, Punta Borinquen, Santo Domingo, Arizona, Los Coléricos, and La Trocha. (Barriada del Mar-La Playa no longer exists since it was purposely deconstructed by the government during the 1950s.) The Barriada del Mar-La Playa is considered the second largest slum in the history of the Archipelago. The sector was described in the following fashion:

> *… a todo lo largo del litoral marítimo terrestre, un mar repleto de viviendas paupérrimas construidas de deshechos de: madera, cartón, latas de galletas, y planchas viejas y mohosas de zinc corrugado. Este collar de casuchas comenzaba en el Fuerte [en la desembocadura del Río Grande de Arecibo, al este del casco urbano] y se extendía hasta la Puerto Rico Distilling [al oeste del casco urbano]. Todas ellas enclavadas en los Barrios de: Jareales, Palmarito, La Trocha, Punta Borinquen, Santo Domingo, Arizona y los Coléricos. Las casitas estaban ubicadas muy próximas unas a las otras, había un alto grado de hacinamiento, en espacios habitables muy pequeños. . . . La mayoría del vecindario carecía de los servicios esenciales de: agua, luz y baños sanitarios, etc. También existía ausencia de los servicios básicos del recogido de desperdicios sólidos, por tal razón era uso y costumbre lanzar la basura al mar, la que con su fuerte oleaje devolvía la misma a la orilla, exponiendo a sus residentes, especialmente a los niños a las enfermedades contagiosas de la época.*[36]

[36] Soto de Arce, W, *Al rescate del olvido. Vivencias de un arecibeño* Volume 5 Number 1 (San Juan, Puerto Rico: Hato Rey Printers, 2005), pp 23-24, quoted in Karen Noemí Herrera Valencia, "Recuperando la historia eliminada del Arrabal La Playa de Arecibo," *Ingenios revista de investigación y labor creativa* (San Juan, Puerto Rico, 2018), Access: https://www.ingeniosupr.com/vol-5-1/2018/10/13/recuperando-la-historia-eliminada-del-arrabal-la-playa-de- arecibo. Quoted in Karen Anderson-Córdova, Arleen Pabón-Charneco, Berenice Sueiro-Vázquez, "Section 106 NHPA Effect Determination Form, PR-CPR-000029" (MS: Miami, Florida,2024). Translation into English: "Along the shore there was a sea of houses constructed with wood, cardboard, cracker tins, and remnants, as well as old and rusted zinc corrugated plates. This necklace of derelict houses started on the eastern side of town close to the Fort and ended close to the Puerto Rico Distilling (to the west of the urban core). Together all these houses formed the Jareales, Palmarito, La Trocha, Punta Borinquen, Santo Domingo, Arizona, and Los Coléricos. The diminutive houses were sited next to each other, there was a high level of overcrowding [people living] in very small spaces. Most residents lacked essential services such as water, electricity, toilets, etc. There was no service to collect garbage

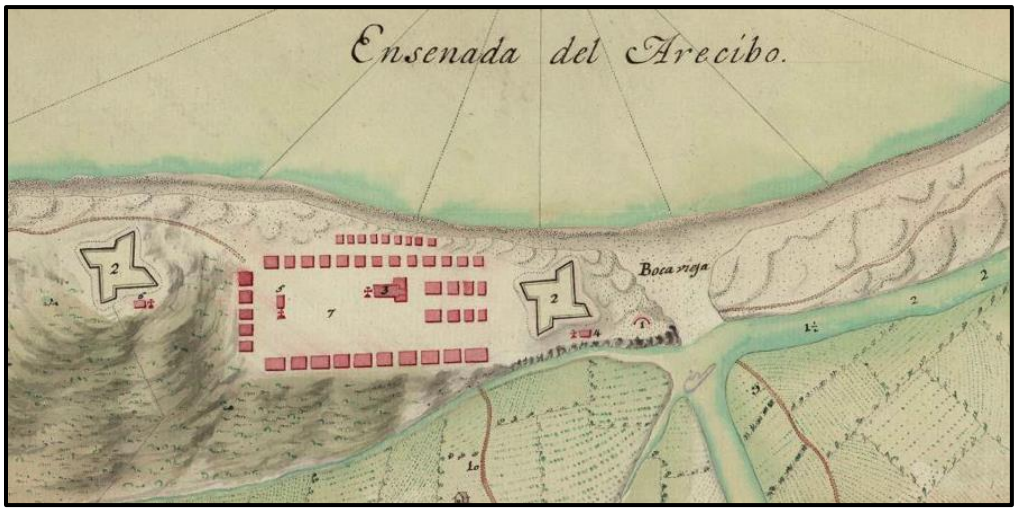

Figure 37. "Plano del Puerto y Ensenada de San Phelipe [*sic*] del Arecibo," Puerto Rico, 18th century (AR_J_T_4_C_2_74)

The 18th century plan shows that the TUC's northern side was packed with smaller houses than the rest of the town (see Figures 34 and 37). This difference is also depicted in the 1887 plan (see Figure 36). These depictions show the plaza was relatively close to the poorer sectors of town since it was interpreted as a place that served all, including the poor. The embryo of what later became one of the largest slums in the Archipelago was sited close to the plaza and not far away from the site as was the case with some late 19th – early 20th centuries slums.

It is interesting to note the tight arrangement depicted by the planned 18th century Arecibo's urban grid and the irregularity present in some of its blocks and sites (considering rectangular or square ones "regular") as the town developed. In the 1908-1912 map drawn by Lieutenant William H Armstrong for his *Progressive Military Map of Puerto Rico*,[37] Arecibo is depicted as a relatively large town still hugging the original sector bordered by the knoll on the west, the sea on the north, and the river on the east. Blocks depict varied shapes and forms (Figure 38). The flexible approach can be contrasted to the rigid geometry evidenced by the 18th century's approach. The tight orthogonal arrangement of the original masterplan evidences the planning strategies interpreted the area as the heart of town, as well as regulating element of the whole urban composition. The geometric regularity was underscored by the plaza's pavement arrangement of four walkways that meet at the center in the shape of a circle.

and because of this situation residents threw garbage into the sea although the strong surf returned it making it possible for children to be exposed to all sorts of maladies."

[37] Lanny Thompson and María Dolores Luque (editors), *The Cartographic Journey of Lieutenant William H Armstrong* (Colombia, Editorial Nomos S A, 2020), 103.

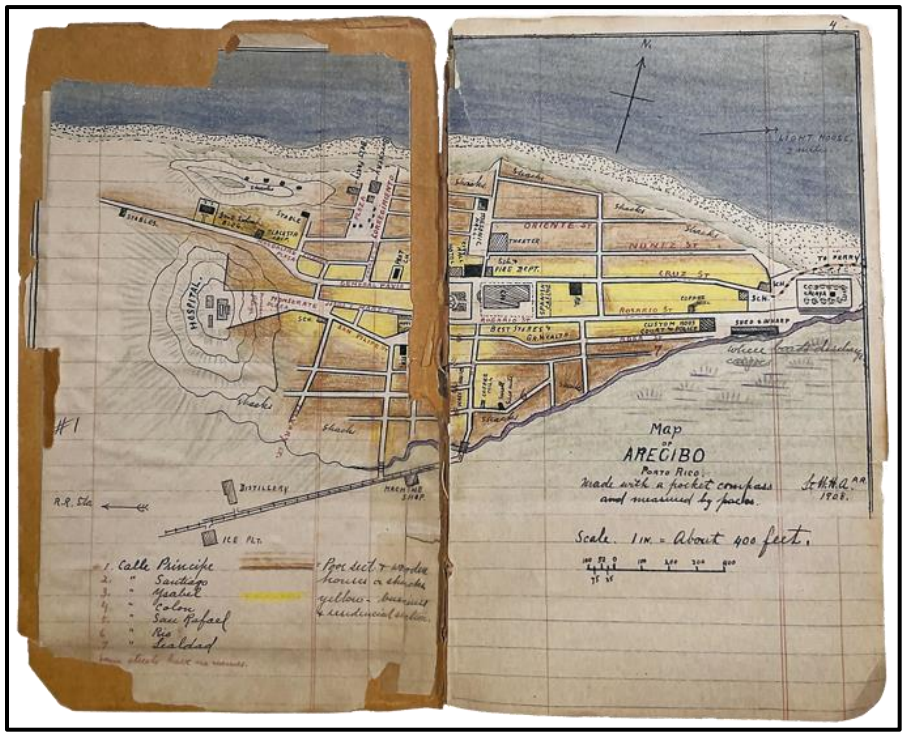

Figure 38. William H Armstrong, *Progressive Military Map of Puerto* Rico, 1908-1912, p 102

Until the extension to the PR-2 was constructed during the 1920s, travelers to the east coast of the Island had to traverse the urban core (Figure 39). This itinerary forced all to go through the town plaza. The Spanish Road system considered when travelling a certain route that each town along the way had to be visited. In Arecibo this momentous change took place at this time. The construction of the first subdivisions in the San Luis area introduced the idea that the town plaza was not necessarily the heart of an urban core.

20th Century Town Plaza and its Urban Context

The most relevant transformation the town plaza underwent during the 20th century was the creation of parking spaces along the north side (José de Diego Avenue). During the second half of the 20th century, crowded municipalities interpreted their plazas as a solution to the many traffic issues historic urban cores encountered. Not only were these cores not designed for cars, but population growth impacted them in dramatic fashion. A most unfortunate adverse effect was caused to the Río Piedras iteration (Plaza de la Convalecencia) where underground parking was constructed during the 1970s. In addition to the inherent danger presented by an underground car park, the insertion dramatically impacted in a negative and irreversible manner the plaza character. In Arecibo, the parking spaces appears by the late 1950s.

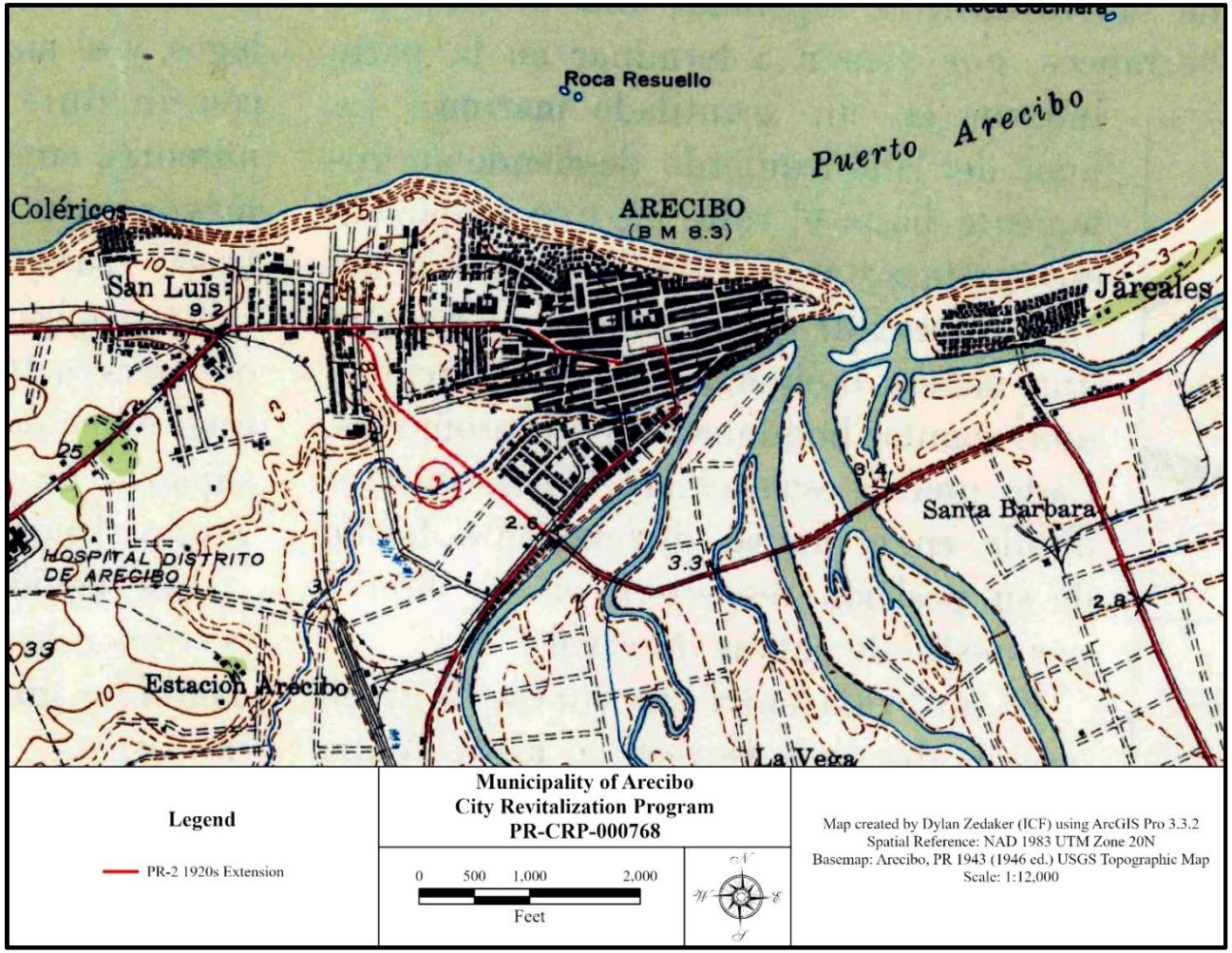

Figure 39. USGS 7.5' Quadrangle 1943 (1946 ed.) Arecibo, PR[38]

[38] Figure produced by Dylan Zedaker (ICF)

During the 1940s and 1950s it was still common for young people to visit the plaza on Sunday afternoons and for young men to walk circling in one direction while young women would do so in the opposite direction. The circulation pattern allowed the groups to come face to face twice.

The Puerto Rican Town Plaza as an Architectural and Urban Icon

Town plazas in the Archipelago were part of the architectural triad representing the political powers of the status quo. The church represented the Catholic faith, the official religion of the Spanish Crown. Because of its spiritual relevance, its location required visual and functional roles from the town plaza, the heart of the urban core. Most walked from the plaza (the everyday sphere) to the church (the spiritual sphere). In other words, from the shadows of daily life (west) to the light of spiritual life (east).

The town hall (known as *casa del rey* or *casa alcaldía* and, presently, as *casa alcaldía*), in turn, was the three-dimensional symbol of the Crown or the political order. In most cases, the building was in one of the four streets surrounding the plaza. It is relevant to underscore the *casa alcaldía* was not placed within the plaza-church urban block(s) but outside. In the US, the court building receives special treatment by being located within a block of its own, silently establishing its powerful mandate. (Thomasville, Georgia is a good example of the arrangement.) In Puerto Rican planning, the *casa alcaldía* is always treated as a secondary building, always outside the semi-sacred site where church and plaza are found. In Arecibo, the *alcaldía* is located on the north side of the plaza, across the street. It is understood as one more building within the urban landscape.

Town plazas represented the people, albeit not in a democratic manner. The people were a civic creature, essential to the status quo yet somewhat shadowy until the 1812 Constitution (also known as *La Pepa*). At the plaza important public activities took place: from entering and exiting the temple, to the market all visited during certain days of the week. It was the place for recreational activities and where important news was received. (In Old San Juan, the reading of the new constitution and public dances took place in some plazas.) The highly relevant role played by the town plaza within Hispanic culture is highlighted by the Spanish Civil War song *En la plaza de mi pueblo* ("In my town's plaza"). As late as the 1930s, the town plaza is interpreted as the ultimate civic stage where – as the song states – the laborer and master face as equals and the first one declares that the fight for equality will be continued by the next generation. The relevant issue of the message is that only in the plaza do they meet as equals.

En la plaza de mi pueblo
En la plaza de mi pueblo
dijo el jornalero al amo
"¡Nuestros hijos nacerán
con el puño levantado!"[39]

. . .

Towns may have several plazas. However, the Arecibo plazas listed in Table 1 are different from Arecibo's existing *Plaza* since this iteration is an example of the traditional Puerto Rican town plaza. In all municipalities, the town plaza was (still is) a symbol of a power triad that included the Crown, the Church, and the People. This is the reason these sites are always found next to the town church and the mayoralty house (*casa alcaldía*). Additionally, it was not unusual for important families and businesses to construct their buildings surrounding the town plaza. This is true in Arecibo. The two most important streets are aligned north and south of the plaza. It was, therefore, not only a planned space in terms of what was to be built around it and its morphology but the most important place of a town, both symbolically and physically. Its traditional orientation (east to west) and rectangular shape silently speak of an arrangement that was meant to anchor the whole town and determine the core's shape.

In contrast to the town plaza, all other iterations were not planned *a priori*. In many cases, they were created in spaces that were not fully functional in terms of pedestrian circulation or vehicular transportation. This independence from the traditional orthogonal grid is present in other Arecibo squares as: Plaza Maquiavelo (dedicated to a local poet), Plaza del Corregimiento (created in front of a Spanish government building), and Plazuela de la Monserrate (in honor of the Virgin of Monserrat). Their irregular floor plans were the result of later urban development phases. It is also possible they are examples of informal urban growth. A planned urban space, the town plaza was a pre-planned urban property that had much in common with what the *Laws of Indies* mandated.

Planned squares like the Puerto Rican town plazas are quite different from plazas that develop in a relatively arbitrary manner. First, the planned type usually uses formal geometric shapes: the rectangle, square, oval, and circle being the preferred ones.

[39] Translation into English: In my town's plaza / the laborer told the master / our children will be born / with their fists raised. The raised fist is an international symbol representing refusal to accept something, solidarity, and determination.

Second, important buildings like the town church and mayoralty house were planned for the plazas' perimeters. Informally planned squares, on the other hand, were usually surrounded by a more limited number of uses. Residential and commercial were the outstanding ones. While the formally planned sites aim at creating a noble space that emphasizes buildings and/or uses, the second type are usually quite informal in approach and therefore establish a more intimate relationship with the visitor. In some cases, they were also smaller than the official iteration (hence, the use of the word *plazuela*).

In both Spanish and English, the word plaza describes one surface plane.[40] From an architectural point of view, this plane defines a spatial unit that has the metaphysical ability of transforming space into place.[41] Subdividing the plaza plane – whether visually or functionally – is an adverse effect. During the 19th century, Antoine-Chrysostome Quatremère de Quincy (1755-1845) defined architecture as a language.[42] He also established architecture is formed of three characters: (i) the essential, (ii) the distinctive, and (iii) the relative. His theory is still considered valid when defining architecture, whether a building, structure, site, or historic district. While this is not the place or time to fully analyze this interpretation, a plaza's essential (its simplest essence or "spirit") and distinctive (its dominant qualities) characters are independent features from those having to do with its relative character (the ephemeral "decoration" which is added from time to time to plazas). This assertion needs to be interpreted with the utmost care, particularly in the case of Arecibo.

Contrary to what some may believe, the many decorations (at times passing as "designs") time has "gifted" to town plazas are not part of the plazas' architectural essence or distinctiveness, as explained by Quatremère. This is also the case with modern interpretation. In other words, Arecibo's existing *Plaza* is much more than a collection of objects (an obelisk, the sculpture of a queen, seats, trees, trash cans, among others). It is, to put it simply and paraphrasing eminent architectural philosopher Jacques Derrida (1930-2004), "the place where Arecibo desire can live." Arecibo "desire" can be defined as the goal of being an independent town, different from all others, and serving the local

[40] The *Diccionario de la Real Academia de la Lengua Española* defines "plaza" as: "*lugar ancho y espacioso dentro de un poblado, al que suelen afluir varias calles*," while *Oxford Dictionary* establishes: "a plaza is a public outdoor square with buildings around it."

[41] According to contemporary architectural theories, a *place* is where humans can fully develop as humans since only place allows them to dwell. Dwelling, in turn, is the interaction of the spiritual, natural, civilized and personal spheres.

[42] The relationship between architecture and language had been intimated before. First century BC Roman architect and theorist Vitruvius is one such interpretation.

intersection of powers: the crown, church, and the people. This contention was particularly true before the creation of the Arecibo suburbia when the town plaza represented a distinctive community among the many others that formed the Puerto Rico Archipelago. It still anchors all sorts of services from governmental to religious, from residential to commercial. Hence, the project to rehabilitate the site.

Three Contributing Elements of the *Plaza*

While we can classify some designs as ephemeral since they do not provide the character-defining features of a Puerto Rican town plaza, there may be cases when such transformations do become contributing components of a plaza.

The Park-like Atmosphere

During the 19th century, the Arecibo town plaza transformed into a park where trees provided shade for users. Benches presented additional comfort. Rather than a transitional place to the church or a functional locale like a market, this transformation marks a character-defining element since greenery – particularly certain trees – are now considered an essential component of the plaza. In other words, by the 19th century, the recreational aspect of the *Plaza* had become of primary relevance.

The Obelisk

The unusual obelisk gracing the *Plaza* was placed *in situ* when the name was changed to Luis Muñoz Rivera (1859-1916) during the first half of the 20th century may also be considered a character-defining element. A poet, journalist and politician,[43] the obelisk was meant to be interpreted as a commemoration in his memory. Some pose it is meant to represent his pen in the manner of the pen is mightier than the sword. This is an interesting interpretation since obelisks are associated with Egypt, and they are considered stone representations of rays of sun. (The sun, known as Ra or Re, was adored as the most important deity of the Egyptian pantheon.) In the case of Arecibo, it is possible the inspiration came from the many obelisks that adorn Europe. Since they have become symbols of perpetuity it is appropriate Muñoz was honored in this manner. The object's geometry, its height, and exotic symbolism should be considered a contributing element of the *Plaza*. The obelisk falls into the NRHP category of object.

[43] Muñoz Rivera's most important gift to Puerto Rican culture was his son, Luis Muñoz Marín (1898-1980), poet, journalist and politician, as well as Puerto Rico's first elected governor.

The Isabel II Sculpture

A third character-defining element of the *Plaza* is the Isabel II (1830-1904) sculpture. Her short presence at the *Plaza* is dated to have started in 1861 when one Architect Bartoli organized her placement. The replica of the standing sovereign was accompanied by two lions. Known as Isabel *la de los tristes destinos*" (Isabel, the Unlucky), the queen was forced to leave Spain for France in 1868. Two years later she was forced to abdicate in favor of her son. Whether or not she deserves historical recognition, the sculpture is associated with the *Plaza* and could be understood as a character-defining element of this site. The Isabel II sculpture falls into the NRHP category of object.

Historical Background of the APE

Efforts were made to compile historic aerial images of the APE to determine approximate date ranges for the various developments that occurred within and in proximity to the Direct APE. The historic aerials used in this analysis are from 1931, 1950, and 1972 and were obtained from both the Puerto Rico Department of Transportation and Public Works (DTOP 2025) and the United States Geological Service (USGS) Earth Explorer (USGS 2025) historic aerial image databases.

The earliest available historic aerial image of the Direct APE is from 1931 and shows a different version of the plaza within the Direct APE that contains eight planting areas in two rows of four that trend east to west (Figure 40). This is in stark contrast to the next available historic aerial image of the Direct APE from 1950 that shows a heavily altered plaza that corresponds to the current configuration (Figure 41). This configuration includes the gazebo, obelisk, and fountain located in a row down the center of the plaza east to west, respectively. Additionally, there are four rectangular planter sections in each corner, and two elongated planter sections in the northern and southern portions of the plaza. The next available historic aerial image of the Direct APE is from 1972 (Figure 42). This image shows no visible difference from the 1950 aerial aside from the fact that fully grown trees exist in the planters that were constructed, which obscures any details of the plaza below. Lastly, USGS 7.5 Topographic maps were reviewed for 1942, 1949, 1953 and 1964, but were not included since the maps represent the plaza as an empty rectangular polygon and show no information relating to the chronology leading to the existing *Plaza*'s development.

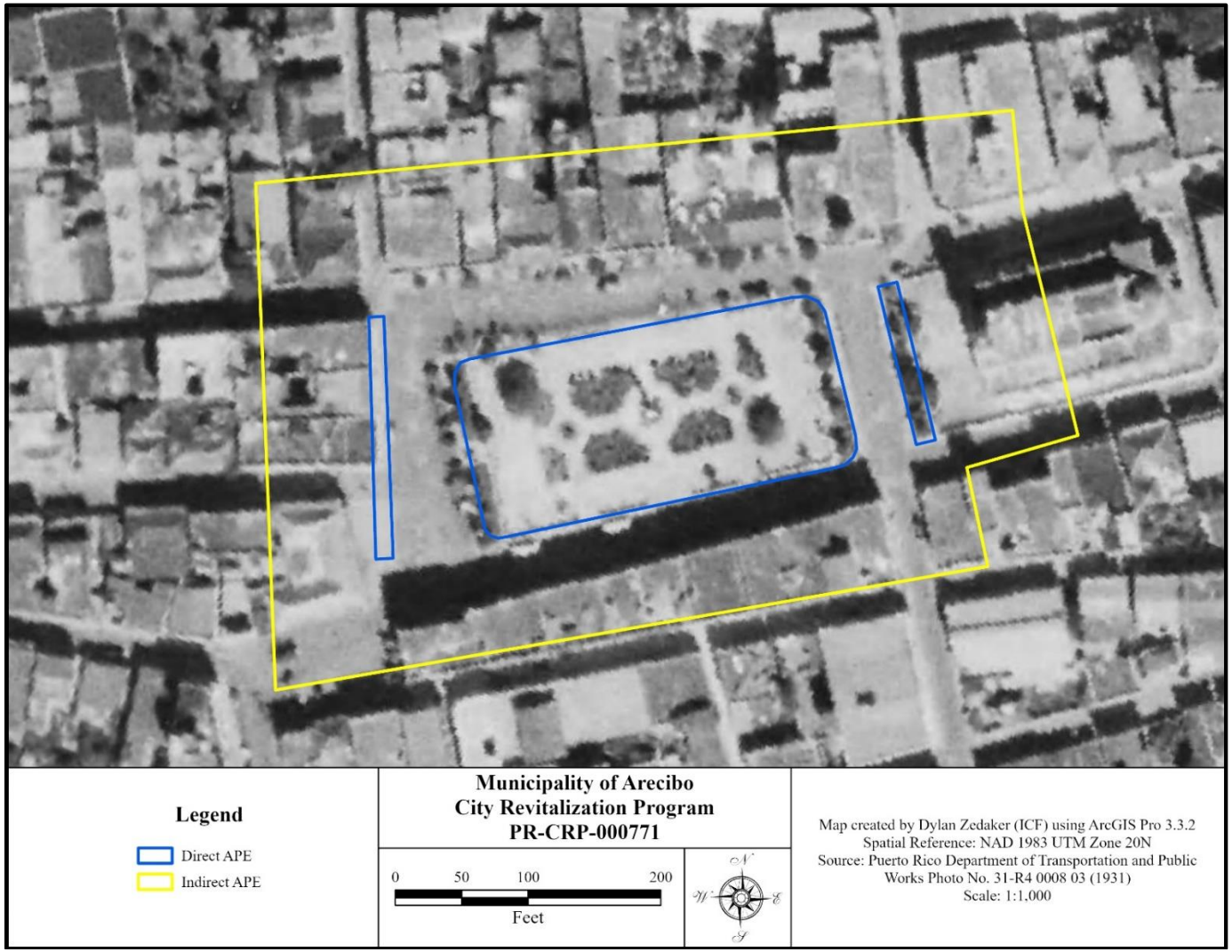

Figure 40. Puerto Rico Department of Transportation and Public Works Historic Aerial Image (1931)[44]

[44] Figure produced by Dylan Zedaker (ICF)

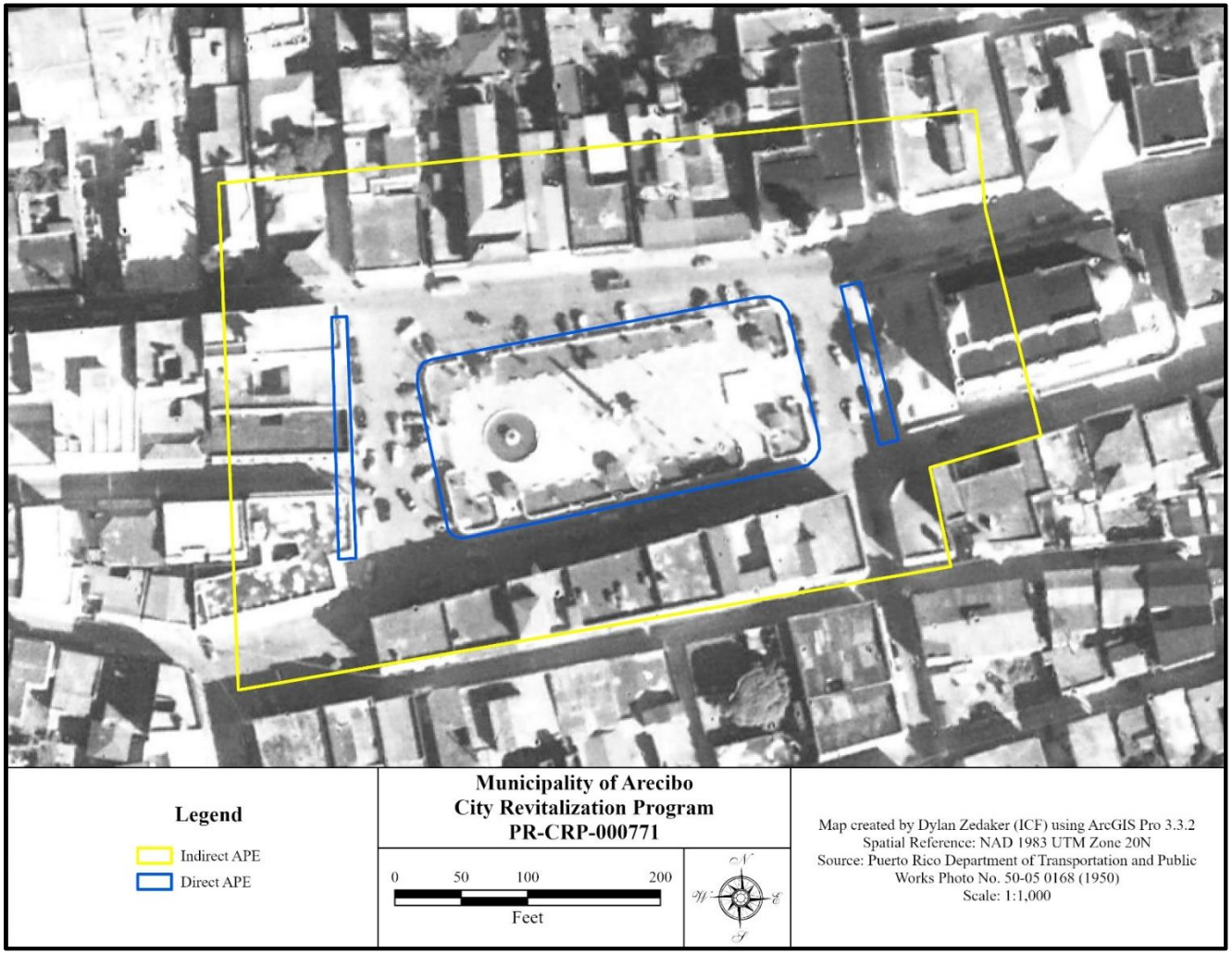

Figure 41. Puerto Rico Department of Transportation and Public Works Historic Aerial Image (1950)[45]

[45] Figure produced by Dylan Zedaker (ICF)

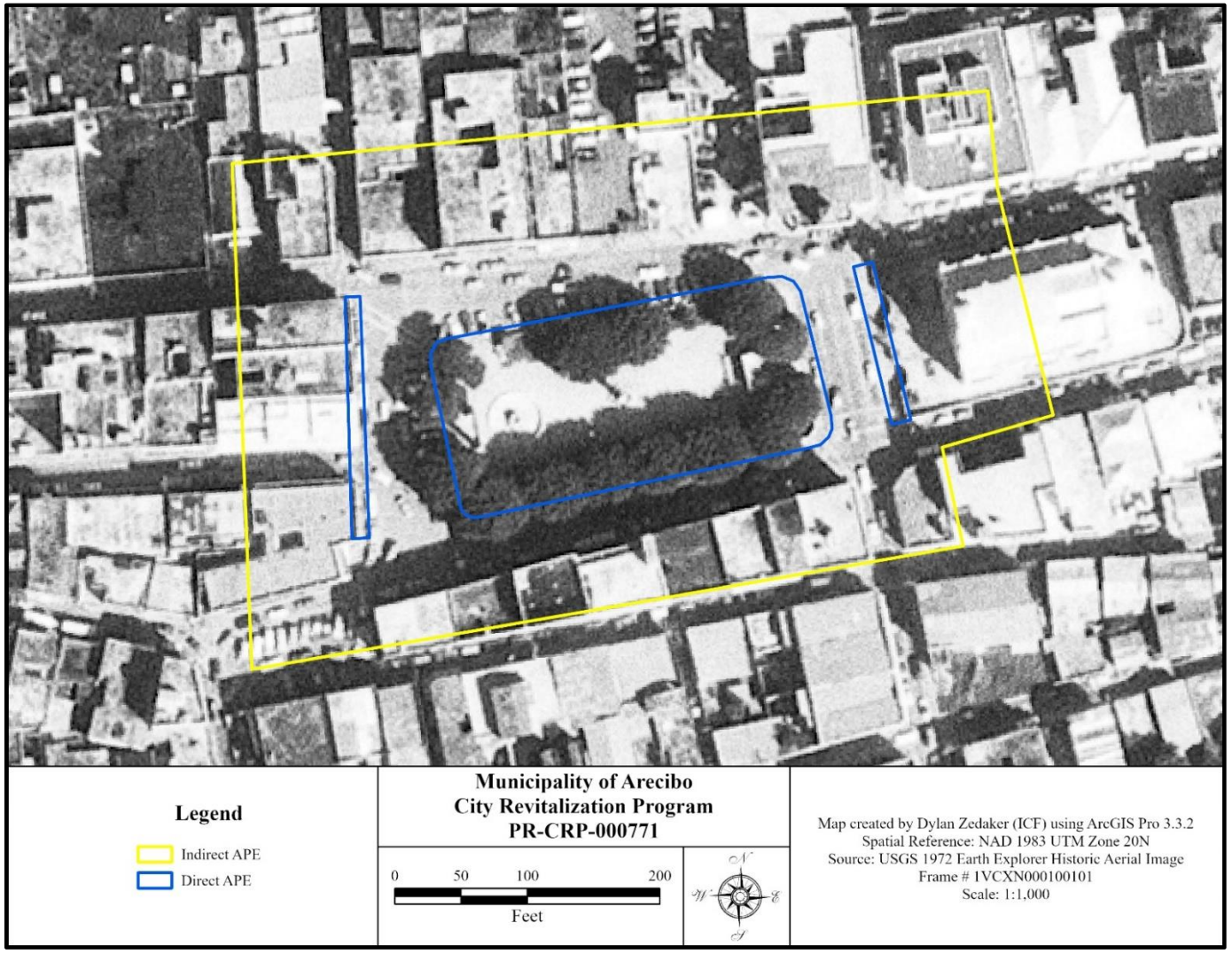

Figure 42. USGS Earth Explorer Historic Aerial Image (1972)[46]

[46] Figure produced by Dylan Zedaker (ICF)

Identification of Historic Properties

Existing information on previously identified historic properties has been reviewed to determine if any such properties are located within the APE of this Undertaking. The review of this existing information by a Program contracted Historic Preservation Specialist meeting the Secretary of the Interior's Professional Qualification Standards (36 CFR Part 61). The project area is located within the NRHP-eligible Arecibo TUC. The archaeological cultural resources survey reports and site survey forms, as well as the administrative project files, of both the PRSHPO and the Institute of Puerto Rican Culture (IPRC) were consulted resulting in a total of twenty-one (21) archaeological sites are located within the quarter-mile research radius of the proposed project composed of five multicomponent sites and 11 historic sites according to the PRSHPO and IPRC files (Figure 43) (Table 2).

Historic Properties - Archaeological Resources[47]

There is one (1) documented archaeological site within the Direct APE (see Table 2), which is Plaza Luis Muñoz Rivera (SHPO# AR0100065, IPRC# AR-48-C). Additionally, there are six (6) documented archaeological sites within the Indirect APE (see Table 2), which are El Caney (SHPO# AR0100005, IPRC# AR-5), Casa Marques-Muñoz (IPRC# AR-48-A-8), Calles: La Calle de Diego y la Calle Gonzalo Marín, Calle Palma, Calle Antonio R Barceló, Callejón Mariano Vidal, Calle del Guayabal (SHPO# AR0100056, IPRC# AR-48-D), Catedral (IPRC# AR-48-E-1), Ermita de la Concepcion (IPRC# AR-48-E-4), and Sistema Pluvial (IPRC# AR-48-H). Additionally, there are fourteen (14) other sites that are within the quarter-mile research radius.

Plaza Luis Muñoz Rivera (SHPO# AR0100065, IPRC# AR-48-C) was the subject of the archaeological study SHPO# 08-09-91-03 by Maria A. Cashion Lugo, which is the main source of information on the subsurface integrity of the plaza. The archaeological study consisted of 10 shovel test pits (STPs) within the northern and southern planter boxes. Three of the STPS were positive for historic materials including historic ceramics, faunal remains, construction materials, brick fragments, glass, and an intact mortar floor. The mortar floor is suggested to be an older version of the plaza floor pavement that is intact in the northern planter. Additionally, the report concluded that the soils underlying the fountain, obelisk, and structure in the middle of the plaza were largely disturbed from previous construction, despite not being able to excavate due to the current floor of the *Plaza*. The southern planter boxes contained entirely anthropogenic fill soils with a concrete floor, along with a room below the southwestern section of the *Plaza's* floor.

[47] This section was produced by ICF including new background research and analysis.

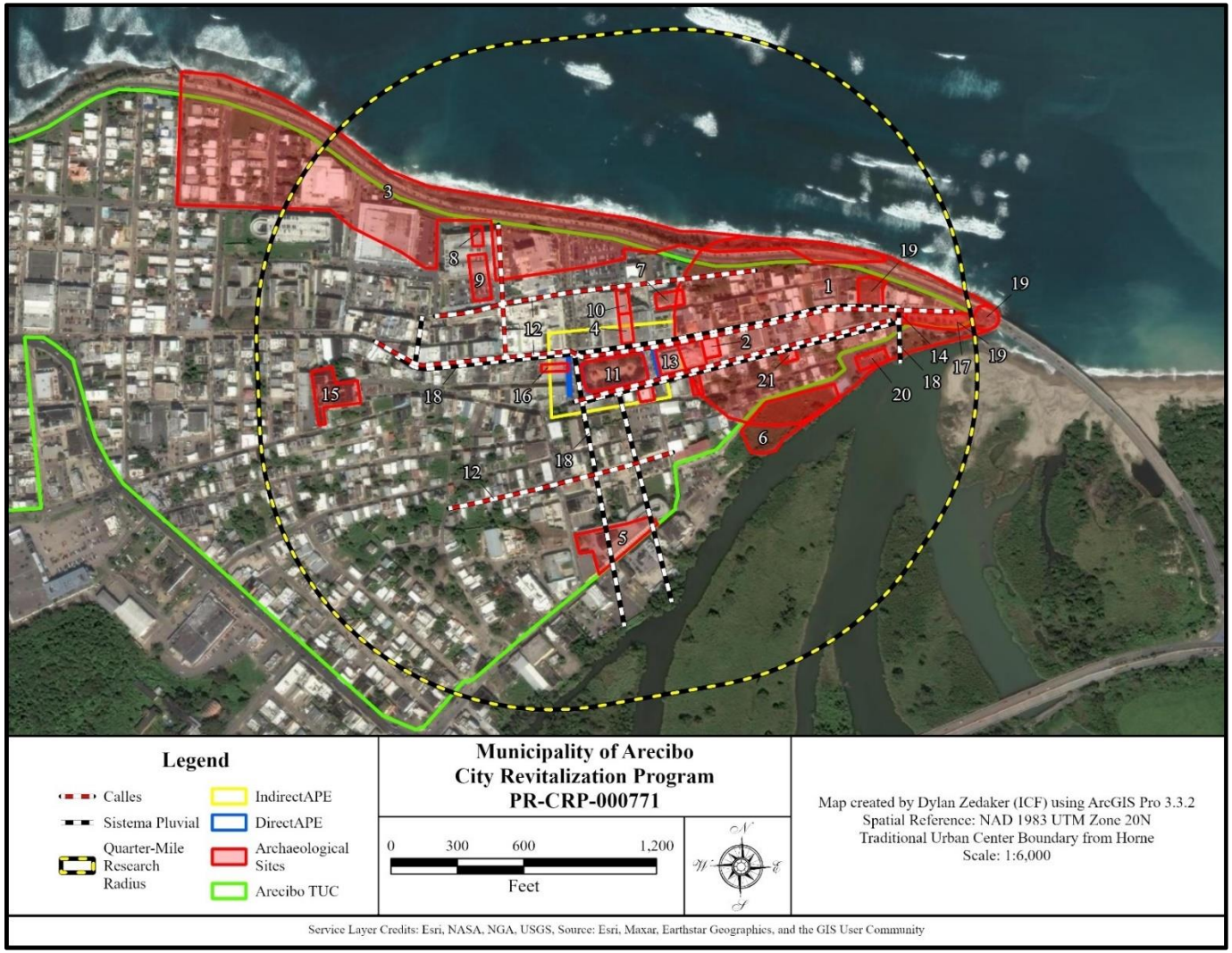

Figure 43. Project (Parcel) Location of Identified Archaeological Sites – Aerial Map[48]

[48] Figure produced by Dylan Zedaker (ICF)

Table 2. Archaeological Sites Within the ¼-Mile Research Radius [49]

ID	Name	SHPO ID	IPRC ID	Distance/ Direction to the APE	Description (Site Type)	NRHP Status (Listed, Eligible, Non-Eligible, No Data, Pending)
1	El Caney	AR0100005	AR-5	Within Indirect APE	Prehistoric and Historic, Habitation	Pending
2	Palace of the Marquis of Las Claras, Casino of Arecibo	N/A	AR-48-A-5	0.02 mi E	Prehistoric and Historic, Burials	Eligible
3	Barriada Santo Domingo	N/A	AR-48-A-7	0.05 mi N	Historic, Habitation	No Data
4	Casa Marques-Muñoz	N/A	AR-48-A-8	Within Indirect APE	Historic, Habitation	No Data
5	Residencia / El Guayabal: House of the Spaniards and Dump	AR0100064	AR-48-A-9	0.10 mi S	Historic, Structural Remains and Midden	Non-Eligible
6	La Puntilla Residencial	N/A	AR-48-A-10	0.07 mi SE	Historic, Habitation	No Data
7	Teatro Oliver, Corregimiento	N/A	AR-48-B-2	0.01 mi N	Historic	No Data
8	Carniceria	AR0100016	AR-48-B-3	0.09 mi NW	Historic, Midden	Pending
9	Plaza del Mercado	N/A	AR-48-B-4	0.06 mi NW	Historic, Structural Remains of Building, Midden	No Data
10	Farmacia casa Marques Muñoz y Panadería calle Barceló	N/A	AR-48-B-5	0.01 mi N	Prehistoric (disturbed) and Historic, Commercial	No Data
11	Plaza Luis Muñoz Rivera (Plaza de Recreo)	AR0100065	AR-48-C	Within Direct APE	Historic, Structural Remains of Public Space	Pending
12	Calles	AR0100056	AR-48-D	Within Indirect APE	Prehistoric (disturbed) and Historic, Road/ Pavement	Non-Eligible[50]
13	Catedral	N/A	AR-48-E-1	Within Indirect APE	Historic, Burials	Eligible
14	Ermita del Rosario	N/A	AR-48-E-2	0.19 mi E	Historic, Burials	Eligible
15	Ermita de la Monserrate	N/A	AR-48-E-3	0.16 mi W	Historic, Burials	Eligible

[49] These archaeological sites are based on a subsurface archaeological component that was documented through an intensive archaeological survey. The archaeological component is associated with the extant/not extant structure and is considered separate from the architectural resource.

[50] SHPO Site # AR0100056 represents only Calle de Diego; however, IPRC Sit # AR-48-D represents the historic street system. Calle de Diego was determined to be non-eligible (under Criterion D) during its documentation, but the remainder of the streets have not been assessed for NRHP-eligibility.

16	Ermita de la Concepcion	N/A	AR-48-E-4	Within Indirect APE	Historic, Burials	Eligible
17	Paseo Victor Rojas/Paseo de Damas/El Fuerte	N/A	AR-48-F	0.20 mi E	Historic	No Data
18	Sistema Pluvial	N/A	AR-48-H	Within Indirect APE	Historic, Utilities (Vaulted Brick Tunnel and Storm System)	Eligible
19	Sistema de defensa: Bateria de Boca Vieja, Fortin San Miguel, Paseo Victor Roja	N/A	AR-48-I-1	0.16 mi E	Historic	No Data
20	Puerto	N/A	AR-48-I-2	0.16 mi E	Historic	No Data
21	Casa Roses-Artau	AR0100058	N/A	0.10 mi E	Prehistoric (Disturbed Midden) and Historic Vaulted Brick Structure	Pending

Previous Investigations

Additionally, a total of thirty-four (34) cultural resources survey reports consisting of Phase 1A-1B, Phase II, Phase III, and Monitoring Reports (Figure 44) (Table 3). Of the thirty-four (34) total cultural resource surveys, thirty-two (32) had positive results from subsurface testing and two had negative results. The ID field column for Tables 2 and 3 is used to label archaeological sites and surveys on Figures 43 and 44. The entirety of the Direct APE has been subjected to a systematic subsurface archaeological survey with positive results. Due to the large number of archaeological surveys within the research radius, only the most relevant surveys will be discussed in detail.

The Direct APE was the subject of the archaeological study SHPO# 08-09-91-03 by Maria A. Cashion Lugo, which is the main source of information on the subsurface integrity of the ***Plaza***. The archaeological study consisted of 10 shovel test pits (STPs) within the northern and southern planter boxes. Three of the STPS were positive for historic materials including historic ceramics, faunal remains, construction materials, brick fragments, glass, and an intact mortar floor. The mortar floor is suggested to be an older version of the ***Plaza*** floor pavement that is intact in the northern planter. Additionally, the report concluded that the soils underlying the fountain, obelisk, and structure in the middle of the plaza were largely disturbed from previous construction, despite not being able to excavate due to the current floor of the ***Plaza***. The southern planter boxes contained entirely anthropogenic fill soils with a concrete floor, along with a room below the southwestern section of the ***Plaza's*** floor.

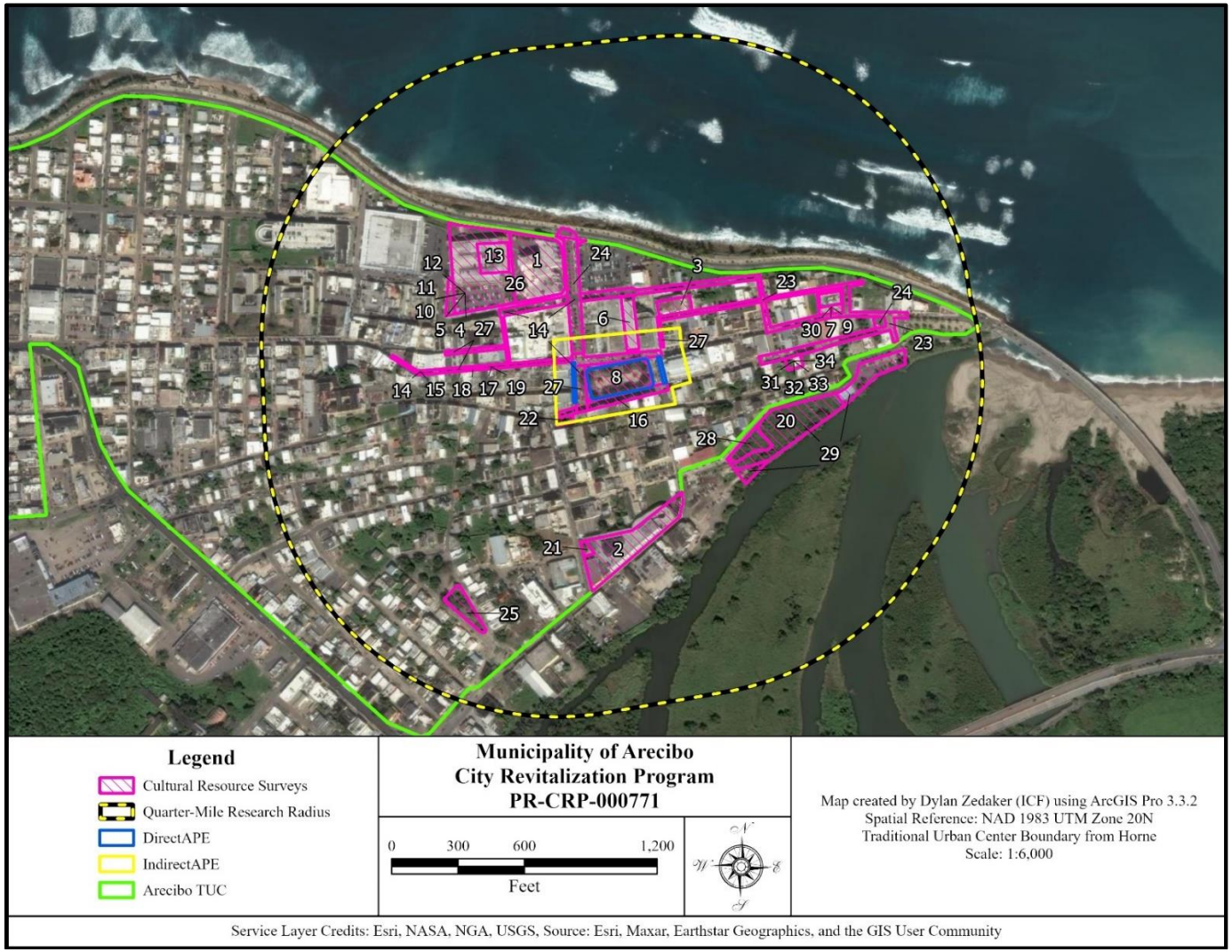

Figure 44. Project (Parcel) Location of Previous Investigations – Aerial Map[51]

[51] Figure produced by Dylan Zedaker (ICF)

Table 3. Archaeological Cultural Resource Studies Within the ¼-Mile Research Radius[52]

ID	Author	Title	Year	SHPO/IPRC ID	Results	Distance/ Direction from APE
1	Miguel Rodríguez	Nuevo Edificio Hospital Susoni , Phase IB	1985	SHPO# 06-11-85-03	Positive	0.04 mi N
2	Jaime G. Vélez	Terminal de Transportación Pública, Núm. 2 (Sur), Phase IA-IB	1990	SHPO# 03-09-87-01	Positive	0.11 mi S
3	Jaime G. Vélez	Teatro Oliver, Phase IA	1991	07-31-87-02	Positive	0.01 mi N
4	Jaime G. Vélez	Estacionamiento Municipal Norte, Phase IA	1991	SHPO# 09-24-90-05 ICP/CAT 91-02-04	Positive	0.04 mi N
5	Juan González	Estacionamiento Municipal Norte, Phase IB	1991	SHPO# 09-24-90-05 ICP/CAT 91-02-04	Negative	0.04 mi N
6	Harry E. Aleman Crespo	Desarrollo commercial, Grand Way Store, Bo. Pueblo, Arecibo, P.R., Phase IA-IB	1991	ICP/CAT 91-02-05	Positive	Within Indirect APE
7	Jaime G. Vélez	Cancha Lincoln, Phase IA-IB	1992	SHPO# 04-22-91-01	Positive	0.12 mi E
8	María A. Cashion Lugo	Restauración Plaza de Recreo, Bo. Pueblo, Phase IA-IB	1992	SHPO# 08-09-91-03	Positive	Within Direct APE
9	Juan González	Mejoras a Cancha Lincoln, Phase II	1993	SHPO# 04-22-91-01	Positive	0.12 mi E
10	Marisol Rodríguez Miranda	Estacionamiento Municipal Norte, Monitoring	1993	SHPO# 09-24-90-05 ICP/CAT 94-05-04	Positive	0.04 mi NW
11	Marisol Rodríguez Miranda & Virginia Rivera Calderón	Estacionamiento Municipal Norte, Phase II	1994	SHPO# 09-24-90-05 ICP/CAT 91-02-04	Positive	0.04 mi NW
12	Juan González	Estacionamiento Municipal Norte, Phase II	1994	SHPO# 09-24-90-05 ICP/CAT 91-02-04	Positive	0.04 mi NW
13	Juan González	Estacionamiento Municipal Norte, Phase III	1994	SHPO# 09-24-90-05 ICP/CAT 91-02-04	Positive	0.07 mi NW
14	Roberto Martínez Torres	Paseo Peatonal de Diego, Phase IA-IB	1994	SHPO# 06-04-90-08 ICP/CAT AR-94-05-02	Positive	0.01 mi W
15	Roberto Martínez Torres	Documentación de un Tramo de la Atarjea Pluvial en la Calle de Diego, Monitoring	1994	SHPO# 06-04-90-08 ICP/CAT AR-94-05-02	Positive	Within Indirect APE
16	Roberto Martínez Torres	Paseo Peatonal de Diego Fase IIB, Barrio Pueblo, Phase IA	1995	SHPO# 10-13-95-10 ICP/CAT AR 95-10-08	Positive	Within Indirect APE
17	Roberto Martínez Torres	Estudio de Evaluacion de Recursos Culturales Construccion Paseo Peatonal de Diego, Phase II	1995	SHPO# 06-04-90-08	Positive	0.06 mi E
18	Roberto Martínez Torres	Salvamento Arqueológico - Paseo Peatonal de Diego, Phase III	1995	SHPO# 06-04-90-08 ICP/CAT AR-94-05-02	Positive	0.06 mi E

[52] Additional excavations are discussed in this section that were early 20th century archaeological excavations that are not included in this table. These excavations were not assigned PRSHPO or IPRC numbers and were unpublished, but the unpublished manuscripts and subsequent results of the excavations were consulted as part of the background research and are considered in the assessment.

19	Roberto Martínez Torres	Impactos a la Atarjea Pluvial Localizada en la Calle de Diego Durante las Obras del Proyecto Monitoring	1995	SHPO# 06-04-90-08 ICP/CAT AR-94-05-02	Positive	Within Indirect APE
20	Roberto Martínez Torres	Adquisición y Realojo de Viviendas Localizadas en la Ribera del Río Grande de Arecibo, Barrio Pueblo, Phase IA	1995	SHPO# 10-06-95-01	Negative	0.07 mi SE
21	Roberto Martínez Torres	Construcción de Kioskos Calle Palma, Barrio Pueblo, Phase IA-IB	1999	SHPO# 06-15-98-08 ICP/CAT AR 99-10-07	Positive	0.10 mi S
22	Roberto Martínez Torres	Construcción Placita del Domino, Barrio Pueblo, Phase IA-IB	1999	SHPO# 11-23-98-20 ICP/CAT AR-99-08-03	Positive	Within Indirect APE
23	Roberto Martínez Torres	Phase 1B, Rehabilitación Aceras Centro de la Ciudad	2001	SHPO# 12-06-01-01	Positive	0.01 mi N
24	Manuel Bermúdez	Centro Urbano de Arecibo, Arecibo, P.R. Phase IA-IB	2003	ICP/CAT AR 03-13-03	Positive	Within Indirect APE
25	Adalberto Maurás Casillas	Evaluación Arqueológica Fase I Viviendas Buenos Aires Arecibo, P.R., Phase I	2005	SHPO# 12-03-03-03	Positive	0.16 mi SW
26	Roberto Martínez Torres	Construcción Once Kioskos Calle Antonio R. Barceló, Barrio Pueblo, Phase IA-IB	2006	SHPO# 06-16-06-08	Positive	0.04 mi N
27	Jesus Figueroa Lugo	Reconexion de Acometidas Sanitarias del Sistema Pluvial al Sanitario, Calle Paseo Jose de Diego, Paseo de las Extrellas, Capitan Correa y Calle de la Palma, Monitoring	2013	ICP/CAT AR 13-20-05	Positive	Within Indirect APE
28	Roberto Martínez Torres	New Pump Station for Downtown Arecibo, Phase III - Excavación de 9 Catas y 3 Trincheras en la Parcela B que Ocupa el Solar Propiedad de la Sucn. Terrasa, Phase IB (Part I)	2014	SHPO# 03-10-10-03 ICP/CAT AR-14-22-03	Positive	0.07 mi SE
29	Roberto Martínez Torres	New Pump Station for Downtown Arecibo, Phase II; - Excavación de 18 Catas y 17 Trincheras en la Parcela A, Phase IB (Part II)	2014	SHPO# 03-10-10-03 ICP/CAT AR 14-22-01	Positive	0.08 mi SE
30	Jaime G. Vélez	Cancha Lincoln, Phase II	1993	SHPO# 04-22-91-01	Positive	0.12 mi E
31	Roberto Martínez Torres	Informe Preliminar de Hallazgos en Casa Álvarez Peniza, Monitoring	1998	SHPO# 10-21-97-09	Positive	0.08 mi E
32	Roberto Martínez Torres	Reconstrucción Casa Álvarez-Peniza (Interior), Calle Gonzalo Marín, Phase IB	1998	SHPO# 10-21-97-09	Positive	0.08 mi E
33	Roberto Martínez Torres	Estructura de Ladrillos en el Solar Noroeste Contigua a la Casa Roses-Artau, Barrio Pueblo, Phase II	2003	SHPO# 06-18-03-02	Positive	0.08 mi E
34	Roberto Martínez Torres	Informe de Impacto Para el Proyecto de Restauración Casa Roses-Artau, Barrio Pueblo - Parte I, Phase I	2003	SHPO# 06-18-03-02	Positive	0.08 mi E

From 1994 to 1995, six (6) archaeological surveys were performed on the western portion of José de Diego Avenue: A Monitoring Plan, two Phase IA surveys, a Phase IB survey, a Phase II survey, and a Phase III survey. These archaeological surveys documented a segment of the historic storm sewer system that doubled as underground tunnels, historic pavements underlying the modern roads, and a prehistoric deposit likely related to the known site of El Caney. These archaeological surveys were performed during a road maintenance project that included demolition and reconstruction of the street and sidewalks. The Phase III archaeological survey stated that the documented storm sewer system (Sistema Pluvial) has been impacted from previous street construction activities and despite the impact, it retains full integrity as a historic engineering work. The portions of the tunnel system that were exposed were reported to show no signs of collapse or cracking of the arches or walls throughout the length. However, the report authors did not make a clear NRHP recommendation. The excavation consisted of a series of trenches placed 1.6 ft (0.5 m) apart that were all terminated between 2.8 ft to 3.3 ft (0.85 to 1.0 m) in depth. The Sistema Pluvial underlies large portions of the Arecibo TUC but has not been ground-truthed in its entirety. However, it is well documented under José de Diego Avenue.

The prehistoric materials encountered consisted of Saladoid ceramics, flake-stone artifacts, snail and bivalve shell artifacts, and a vessel handle with incised decoration of anthropomorphic appearance. However, the official assessment of these materials is that they are out of context and have been displaced by use as fill for the historic Spanish pavement. It was of the opinion of the report author that during the original street and sidewalk construction works of the previous century, an archaeological rescue excavation had been performed. The stratigraphic breakdown of the road is that the modern roadway sits on top of the Sistema Pluvial, which is in turn underlain by the historic Spanish pavement that sites on top of the construction fill soil containing displaced prehistoric artifacts. Due to the height of the Sistema Pluvial tunnels, they underlie the modern pavement but were buried within all of the underlying anthropogenic soil stratums.

An important archaeological survey was performed within the research radius at the Cancha Lincoln basketball court in 1991. A Phase IA-IB and Phase II were performed by Jaime G. Vélez and a Phase II was performed by. Juan González all under SHPO# 04-22-91-01. These excavations exposed a series of diagnostic ceramics that correspond to a long period of prehistoric habitation with the Saladoid (c. 250-600 AD), the Ostionoid (c. 600-1200 AD), the Chicoid (Taino) (c. 1200-1500 AD), and ten (10) burials were encountered during the course of these excavations with the average depth at approximately 3 ft (90 cm) below surface. Ultimately, the human remains were recorded and reburied in place.

The planned construction of a new building as part of this basketball rehabilitation project was subsequently cancelled. Additionally, a section of the vaulted brick underground storm sewer tunnels associated with the Spanish Colonial Period trending east-west was encountered in one of the units during the Phase II.

In 2003, a Phase IA-IB was conducted by Adalberto Maurás Casillas (ICP/CAT AR-03-13-03) of four proposed pedestrian transects with the intent to identify areas within TUC where subsurface testing could be conducted in order to determine the archaeological potential for areas within the study area. Due to the large number of hardscapes (concrete and asphalt) throughout the TUC, shovel test pits (STPs) were excavated at 65 ft (20 m) intervals in areas free of pavement such as plant areas bordering roads and vacant lots. This survey found prehistoric and historic remains along Palma Street and historic material related to the Boca Vieja Battery near the modern Víctor Rojas Plaza. Additionally, the study concludes that there is a high probability of both prehistoric and historic archaeological resources underlying the modern paved surface of Arecibo that was unable to be tested as part of the project.

In 1997, a Phase IB and a Monitoring plan (SHPO# 10-21-97-09) and in 2003, a Phase I and Phase II (SHPO# 06-18-03-02) were executed by Roberto Martínez Torres. The archaeological surveys resulted in the documentation of prehistoric ceramics including zoomorphic ceramics associated with El Caney (AR0100005), prehistoric lithics, historic ceramics, glass, metal, and faunal remains. Due to a lack of stratigraphy from use of the site as a trash dump through time, the report concluded that the presence of prehistoric archaeological materials is a common phenomenon throughout the city of Arecibo, that it was not in-situ and that it did not retain integrity. Additionally, a brick vaulted tunnel was encountered beneath the house. The report concludes that the brick structure was likely not a residential latrine, or a water cistern, but that it may have been part of the historic stormwater drainage system for the city.

José R. Oliver Aresti was an amateur archaeologist who performed a series of excavations from 1945 to 1955. His excavations yielded a wide variety of prehistoric ceramics, lithics, faunal remains, and prehistoric burials across the east portion of the Arecibo TUC. He recorded burials at several structures adjacent to the APE including #12 Gonzalo Marín Street, #23 José de Diego Avenue, #55 José de Diego Avenue, #57 José de Diego Avenue. These burial locations were used to delineate the boundary of El Caney (AR-5) and were presumed to indicate the long occupation of this large village site. Additionally, he encountered historic artifacts including ceramics and historic burials dated to the 16th

century. Aresti's work has been regularly referenced as one of the earliest systematic archaeological excavations in Arecibo, and particularly because it exposed many human remains and burials.

Summary

The Direct APE has been subjected to an intensive subsurface archaeological survey with positive results and there is one archaeological site within the Direct APE: Plaza Luis Muñoz Rivera (SHPO# AR0100065, IPRC# AR-48-C), that is pending in eligibility for inclusion in the NRHP but is considered locally eligible. The site contains historic pavements that underly the current surface, and in addition to intact soil stratums containing artifacts. The soils in the northern planter are moderately intact with some subsurface disturbance, whereas the southern planter has been completely replaced with anthropogenic soils. While there has been significant historic development of the APE resulting in soil disturbance, the archaeological analysis of the *Plaza* summarized above shows that there are undisturbed stratums that contain intact archaeological resources beneath current *Plaza* floor. Therefore, it is our conclusion that the Direct APE has known archaeological deposits with the potential for underlying unknown archaeological resources that retain integrity. Therefore, the project will require mitigation measures to ensure no potentially eligible archaeological resources are adversely affected.

Identification of Historic Properties – Architectural Resources[53]

Existing information on previously identified historic properties has been reviewed to determine if any such properties are located within the APE of this undertaking. The review of existing information by a Program contracted Historic Preservation Specialist meeting the Secretary of the Interior's Professional Qualification Standards (36 CFR Part 61) shows that the project area is within the Arecibo TUC / Historic District, eligible for inclusion in the NRHP as a historic district.

To interpret the architectural properties eligible for inclusion in the NRHP, archival research activities were undertaken. Although there is an IPRC document proposing a historic district for Arecibo, this institution has no architectural inventory of the Arecibo Municipality. Arecibo has sixteen (16) properties listed in the NRHP. There are eleven (11) NRHP-listed properties within the APE and ¼-mile research radius (Table 4) (Figure 45). Additionally, there are ten (10) NRHP-eligible per the PRSHPO within the APE and ¼-mile research radius (Table 5) (See Figure 45). The ID field column for Tables 4 and 5 is used to label architectural resources on Figure 45.

Determination of NRHP-Eligible properties within the Direct APE (per the Program)

According to the National Park Service (NPS), eligibility to the NRHP is determined by several characteristics: "The quality of significance in American history, architecture, archeology, engineering, and culture is present in districts, sites, buildings, structures, and objects that possess integrity of location, design, setting, materials, workmanship, feeling, and association…" To be eligible, a property must also be associated to an important historic context and meet at least one of four criteria:

A. Associated with events that have made a significant contribution to the broad patterns of our history; or

B. Associated with the lives of persons significant in our past; or

C. Embody the distinctive characteristics of a type, period, or method of construction, represent the work of a master, possess high artistic values, or represent a significant and distinguishable entity whose components may lack individual distinction; or

D. Have yielded, or may be likely to yield, information important in prehistory.[54]

[53] Both ICF and Antonio Pontón González contributed background research and analysis for this section.

[54] National Park Service, "National Register Bulletin How to Apply the National Register Criteria for Evaluation," pp 2-3; 12-24, Access: https://www.nps.gov/subjects/nationalregister/upload/NRB-15_web508.pdf.

Table 4. NRHP-Listed Historic Properties within the Indirect APE

ID	NAME AND ADDRESS	INCLUSION DATE	NRHP NUMBER	CATEGORY	CRITERION
1	Casa Ulanga #7 Gonzalo Marín Street	26 July 1982	82003822	Building	A, C
2	Teatro Oliver (Corregimiento Plaza Theater) Llaguerry and Toribio Pagán Streets	6 January 1986	86000041	Building	C
3	Casa Alcaldía de Arecibo José de Diego Street	29 September 1986	86002762	Building	A, C
4	Edificio Oliver 64 Avenida José De Diego	1 October 1986	86002764	Building	C
5	Casa Córdova 14 Gonzalo Marín Street	17 November 1986	86003185	Building	C
6	Paseo Víctor Rojas Gonzalo Marín Street and de Diego Avenue	19 November 1986	86003188	Structure	A
7	House 101 Gonzalo Marín Street	19 November 1986	86003183	Building	A, C
8	House 61 Gonzalo Marín Street	9 June 1988	88000645	Building	C
9	Palacio del Marqués de las Claras 58 Gonzalo Marín Street	12 July 1988	88000964	Building	A, B, C
10	Casa de la Diosa Mita 251 Fernández Juncos Street	9 September 1988	88000966	Building	C
11	Franklin Delano Roosevelt School Betances Street	8 February 2021	MP100006152	Building	C

Table 5. NRHP-Eligible Historic Properties within the Indirect APE (Per the PRSHPO 2020 Inventory)

ID	NAME	APPROXIMATE DATE	CATEGORY
12	Respetable Logia Masónica Tanamá #2	1884	Building (Masonic lodge)
13	Cayetano Coll y Toste House	2nd half 19th century	Building (house)
14	Aduana	1926-1931	Building (USA customs house)
15	Town Plaza	18th century	Site
16	Catedral San Felipe Apóstol	1886	Building (church)
17	House José A Suliveres	c 1913	Building (house)
18	Jefferson Grade School	1909	Building (school)
19	Escuela Luis Muñoz Rivera	c 1920	Building (school)
20	Casa de la Hjalmarson (aka Casa de los Soles Truncos)	c 1875	Building (house)
21	House Roses Artau	c 1913	Building (house)

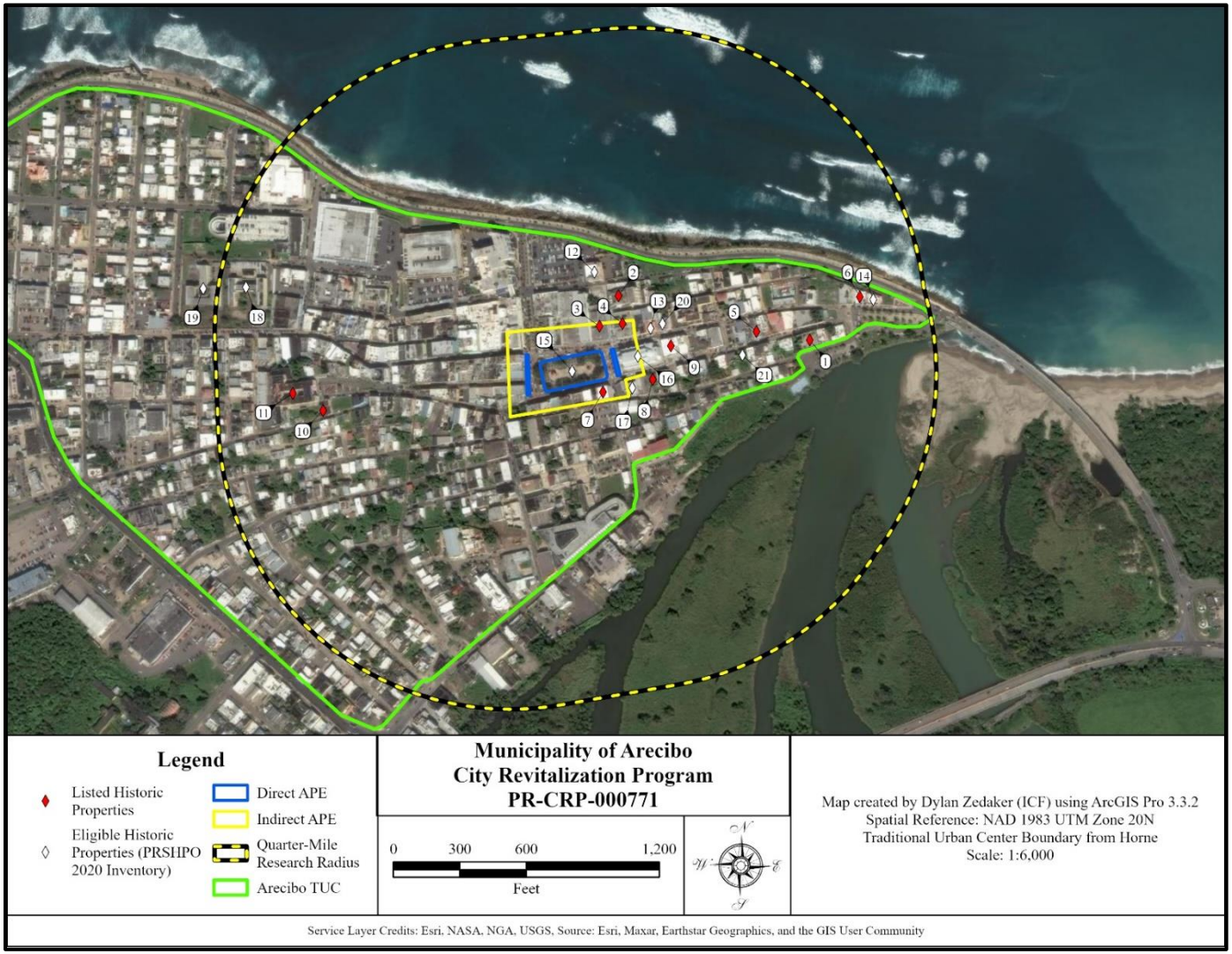

Figure 45. Project (Parcel) Location of Identified Architectural Resources – Aerial Map[55]

[55] Figure produced by Dylan Zedaker (ICF)

Additionally, although there may be exceptions to this rule, a property must be at least fifty years old to merit inclusion in the NRHP. There is no doubt the Arecibo's TUC merits inclusion in the NRHP as a historic district under Criteria A and C. Not only is it one of the oldest urban centers in the Puerto Rico Archipelago, being two and a half centuries old, but it includes architectural and urban typologies that are unique. The core includes important prehistoric and urban components, as well as historic ones.

Arecibo Town Plaza NRHP Eligibility

The Arecibo Town Plaza was determined eligible for the NRHP per the PRSHPO 2020 Inventory. The *Plaza* has undergone multiple renovations that have altered its conceptual design parameters, geometric framework, and stylistic design, so the current condition only reflects the style and design parameters chosen for the latest renovation (1990 by IVA). However, there are extant character-defining elements that represent each period. Figure 46 illustrates the chronological changes to the *Plaza's* configuration over time, originating with a including a ca. 1737 rendering (A) of the original rustic plaza with a geometric layout vaguely responding to the "Leyes de las Indias" (1542). The original configuration of the plaza was an open space with a compacted sandy earth floor and a small building located on the western side. The floor maintained the original profile of the existing dune and sloped mostly towards the south. The plaza provided a full view of the church building located on the east side. This layout and its simple style reflected most of the parameters as established by "Leyes de las Indias" (1542) and the interests of the Spanish King in urban planning of the New World. While no characteristics are still extant from this period, the existing *Plaza* does possess integrity of location and association.

The first period of significance with extant features in the plaza's history is circa 1858 when the plaza was named "Isabel II" and a sculpture of Reina Isabel II was installed as the main feature at the center of the plaza, facing the west (B). The plaza was primarily a large rectangular open area used for military and public gatherings, surrounded by a low fence made with concrete columns and simple cast-iron grilles. The character-defining feature best representing this first period is the ***Park-like Atmosphere***. During the 19th century, the Arecibo town plaza transformed into a park where trees provided shade for users. Benches presented additional comfort. Rather than a transitional place to the church or a functional locale like a market, this transformation marks a character-defining-feature since greenery – particularly certain trees – are now considered an essential component of the plaza. In other words, by the 19th century the recreational aspect of the plaza is of primary relevance. The *Plaza* falls into the NRHP category of site.

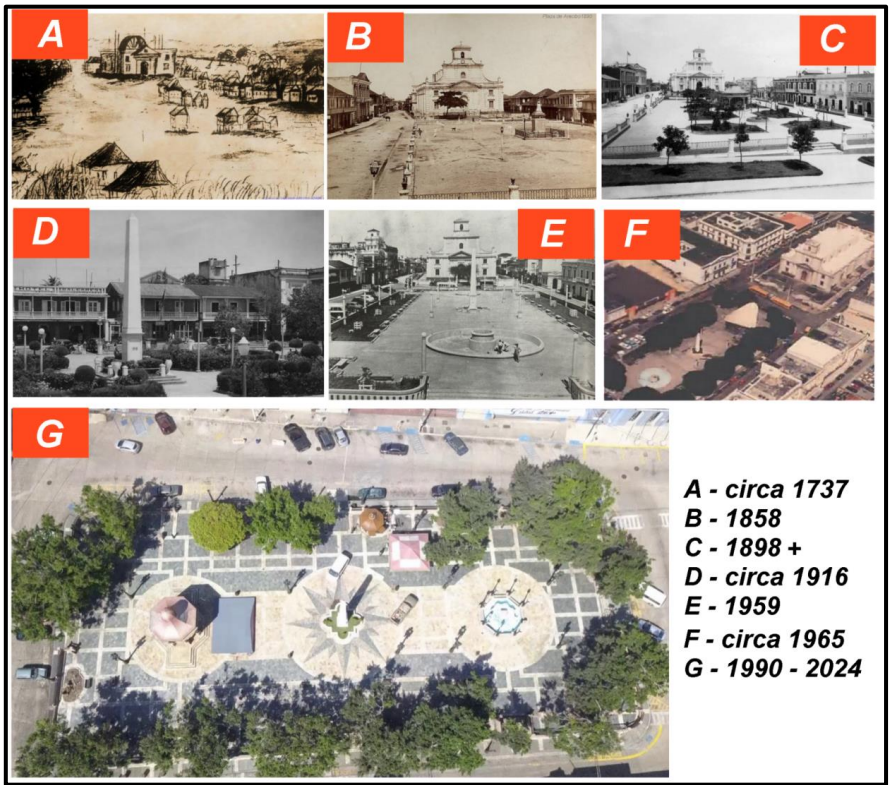

Figure 46. - Chronology of the Arecibo Plaza Remodels[56]

The second period of significance is between 1898 and 1916, after the death of Luis Muñoz Rivera, when the plaza was renamed after him and the central Obelisk statue was installed (1916). During this period, the plaza maintained the features from the 1858 remodel: the planting areas in the central rectangle and the surrounding low wall with the decorative iron panels. The remodel in 1898 made some irreversible changes to these features by removing the Reina Isabel II sculpture and installing planting areas and a gazebo in the central rectangle (C, D and E). The character-defining feature best representing this second period of significance is the ***Obelisk***. The unusual obelisk gracing the plaza was placed *in situ* when the name was changed to Luis Muñoz Rivera (1859-1916) during the first half of the 20th century. A poet, journalist and politician,[57] the obelisk was meant to be interpreted as a commemoration in his memory. In the case of Arecibo, it is possible the inspiration came from the many obelisks that adorn Europe. Since they have become symbols of perpetuity it is appropriate Muñoz was honored in this manner. The object's geometry, its height, and exotic symbolism should be considered a contributing object. The obelisk falls into the NRHP category of object.

[56] Photographs by Antonio Pontón González (2023).

[57] Muñoz Rivera's most important gift to Puerto Rican culture was his son, Luis Muñoz Marín (1898-1980), poet, journalist and politician, as well as Puerto Rico's first elected governor.

The third period of significance emerged following the remodel in 1979, which completely changed the overall appearance of the *Plaza* (F and G). The remodel made irreversible changes by substituting the fence railing with a concrete fence in an Art-Deco style, adding two new fountains, implementing Art Deco style architectural urban elements, moving the planting areas to the external bands of the central rectangle, and planting rows of ficus trees, which 15 years later became giants. The character-defining feature best representing this period would be the return of the ***Isabel II Sculpture*** to the plaza. The sculpture's short presence at the plaza started in 1861 when one Architect Bartoli organized her placement. Originally, the sculpture was located at the center of the plaza where the Luis Muñoz Obelisk is now located, but it was removed in 1898. The sculpture is closely associated with the original layout of the Arecibo town plaza and could be understood as a character-defining element that was removed for over a century. As part of the proposed scope of work, the original Reina Isabel II and the reclining lion's sculptures will be restored and installed at the western side of the *Plaza* in a concrete and marble base surrounded by a garden. The Isabel II sculpture falls into the NRHP category of object.

Therefore, consistent with the PRSHPO 2020 Inventory, the *Arecibo Town Plaza* is eligible for inclusion in the NRHP under Criterion A, as a site associated with events that have significantly contributed to the broad patterns of Arecibo's founding in 1616 and its historical development, and under Criterion C, as the Obelisk and Isabell II sculpture embody the distinctive characteristics of urban architectural monuments conveying local history.

There are three historic properties within the Indirect APE are all listed in the NRHP: House at 101 Gonzalo Marín Street, NRHP asset #86003183, listed at the state level of significance on 11/19/1986, under Criterion A for economics and Criterion C for architecture. The two-story building was constructed in 1908 for banking and residential purposes and designed in the Spanish neo-classical vocabulary. Casa Alcaldía de Arecibo, José de Diego Street, NRHP asset #86002762, listed at the state level of significance on 9/29/1986, under Criterion A for politics/government and Criterion C for architecture. The two-story building was constructed in 1866 as Arecibo's City Hall and in 1868 served to imprison pro-independence political rebels associated with the "Grito de Lares". Edificio Oliver, 64 Avenida José De Diego, NRHP asset #86002764, listed at the state level of significance on 10/1/1986, under Criterion C for architecture. The three-story building was built in 1914 and was designed in the Beaux Arts style.

Determination

Archaeological Historic Properties

Direct Effect: The Direct APE is located within the Arecibo TUC, an historic district eligible to the NRHP for extensive architectural and archaeological resources. Plaza Luis Muñoz Rivera (SHPO# AR0100065, IPRC# AR-48-C) is the lone archaeological historic property within the Direct APE that may be impacted during project activities. Archaeological remains consist of an underlying mortar pavement that is the previous floor of the plaza and intact stratified soil deposits containing artifacts. Based on the results of the archaeological survey (SHPO# 08-09-91-03) by Maria A. Cashion Lugo, the northern, central and southern portions of the plaza differ from each other regarding their potential for intact archaeological resources. In this discussion, the northern portion of the APE is the northern planters within the plaza near José de Diego Avenue; the southern portion of the APE is the southern planters within the plaza near Gonzalo Marín Street; and the central portion is the area in between the two that underlies the gazebo, obelisk, and fountain. The northern portion has confirmed archaeological remains in the form of stratified soil deposits and underlying pavements. The central portion was untested during the survey but remains likely to contain an extension of the resources to the north. Lastly, the southern portion was determined to be entirely disturbed and that it retains no intact soils or integrity. Since there are portions of the APE that have been untested, there is the possibility to encounter unknown archaeological resources within the Direct APE.

The *Plaza* is an important and sensitive historic open space site that is considered NRHP-eligible. The site contains documented historic archaeological materials and has additional potential in the central portion to contain additional unknown archaeological resources. Ground-disturbance related to the replacement of any modern pavement or ground disturbance, may damage or displace the underlying pavement, and potentially have an adverse effect on these resources. The primary adverse effect is the potential physical damage to the intact portions of the site that would result in the diminishment of its integrity. Due to the results of the archaeological survey (SHPO# 08-09-91-03) by Maria A. Cashion Lugo, archaeological resources within the Direct APE are well documented. Therefore, as it currently stands, the proposed construction and demolition activities that require subsurface disturbance pose an adverse effect to Plaza Luis Muñoz Rivera (SHPO# AR0100065, IPRC# AR-48-C).

Based on the results of our identification efforts, the Program has determined that there is one (1) archaeological historic property that will be adversely affected by the proposed undertaking. Due to the known archaeological remains and potential for unknown archaeological remains, mitigation measures will be required. A monitoring plan would be the preferred mitigation measure for this project as it would ensure that ground-disturbing activity do damage archaeological resources and allow for thorough documentation if archaeological remains if they are encountered. Based on all the information researched and analyzed in this document, it is the Program's conclusion that the project will have **No Adverse Effect** on archaeological resources with the condition that with an archaeological monitoring plan in place. Lastly, the monitoring plan will provide additional guidance and protocol to follow if human remains are encountered during demolition or construction.

Architectural Historic Properties

Direct Effect: Project activities will be confined to the *Plaza*, but they will not be adverse because the integrity of its character defining features will not be diminished: the park-like setting, the Obelisk, and the Isabel II Sculpture. As conditions, to avoid damage, it is recommended that: 1) a special barrier be constructed to protect the existing "Pluma de Muñoz Rivera monolith statue" during construction and 2) that specific handling instructions be added to the technical specifications of the project, for the restoration, transportation and installation of the Reina Isabel II and the two Lion Statues. Based on the results of our historic property identification efforts, the Program has determined that the project actions will have **No Adverse Effect** on the historic properties within the Direct APE with the two above conditions.

Indirect Effect: The following architectural historical properties have been identified within the Indirect APE: Gonzalo Marín 101, Casa Alcaldía de Arecibo, and Edificio Oliver. The proposed improvements are limited to the *Plaza* and the new design layout will harmonize the architectural styles and the overall morphology of the *Plaza* with the historic trends. As a result, the proposed undertaking will not cause any alteration to the views, nor will it introduce any atmospheric or audible elements that may diminish the historic integrity of any of the properties that form the Indirect APE and the Arecibo TUC. Based on the results of our historic property identification efforts, the Program has determined that the project actions will have **No Adverse Effect** on historic properties within the Indirect APE.

Recommendation

The Puerto Rico Department of Housing requests that the Puerto Rico SHPO concur that the following determination is appropriate for the Undertaking (Choose One):

☐ No Historic Properties Affected

☒ No Adverse Effect

Conditions:

1) Alternative 3 was chosen for the new fountain pumps and electrical control room as discussed during the January 21, 2025, meeting between the Municipality, GM, and PM.

2) To address any potential impacts to archaeological resources within the Direct APE, archaeological monitoring by an SOI-Qualified archaeologist is required for all work requiring ground disturbance such as excavation and demolition. An archaeological monitoring plan shall be submitted by an SOI-Qualified archaeologist to the PRSHPO and approved prior to any work being performed.

3) To avoid damage to architectural historic properties, a special barrier must be constructed to protect the "Pluma de Muñoz Rivera monolith statue" during construction.

4) To avoid damage to architectural objects, specific handling instructions must be added to the technical specifications of the project, for the restoration, transportation and installation of the Reina Isabel II and the two Lion Statues.

☐ Adverse Effect

Proposed Resolution (if appliable):

This Section is to be Completed by SHPO Staff Only

The Puerto Rico State Historic Preservation Office has reviewed the above information and: ☐ **Concurs** with the information provided. ☐ **Does not concur** with the information provided.	
Comments:	
Carlos Rubio-Cancela State Historic Preservation Officer	Date:

Project (Parcel) Location – Area of Potential Effect Map (Aerial)[58]

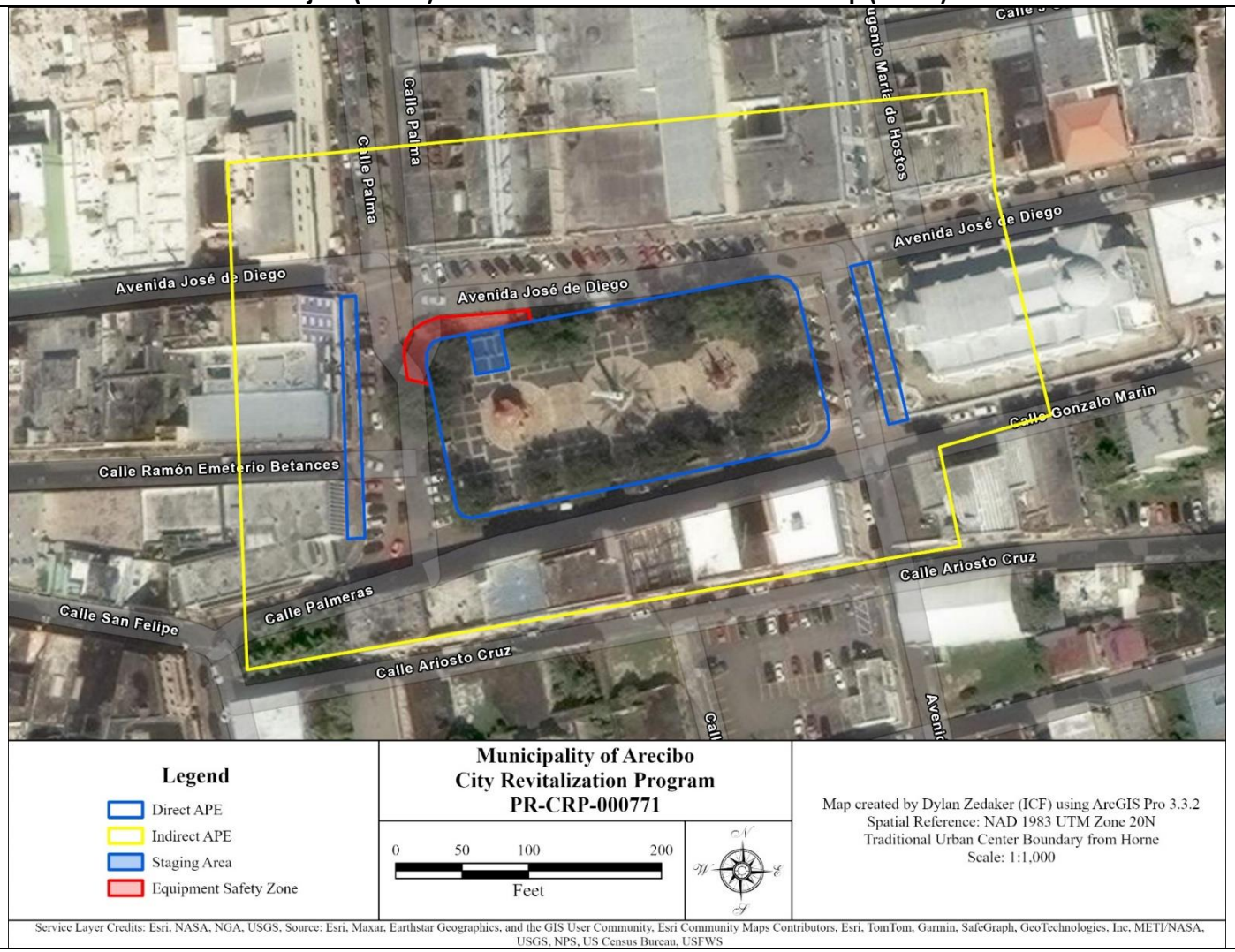

[58] All of the following mandatory maps were produced by Dylan Zedaker (ICF)

Project (Parcel) Location - Aerial Map

Project (Parcel) Location – USGS Topographic Map

Puerto Rico 2017 Disaster Recovery, CDBG-DR Program **City Revitalization Program (City-Rev)** **Section 106 NHPA Effect Determination**	DEPARTMENT OF HOUSING GOVERNMENT OF PUERTO RICO
Subrecipient: Municipality of Arecibo	
Case ID: PR-CRP-000771	**City**: Arecibo, PR
Project Name: Revitalization of Plaza Luis Muñoz Rivera in the Urban Center of Arecibo	

Project (Parcel) Location – Soils Map

Puerto Rico 2017 Disaster Recovery, CDBG-DR Program City Revitalization Program (City-Rev) Section 106 NHPA Effect Determination	DEPARTMENT OF HOUSING GOVERNMENT OF PUERTO RICO
Subrecipient: Municipality of Arecibo	
Case ID: PR-CRP-000771	**City**: Arecibo, PR
Project Name: Revitalization of Plaza Luis Muñoz Rivera in the Urban Center of Arecibo	

Project (Parcel) Location with Identified Historic Properties – Aerial Map

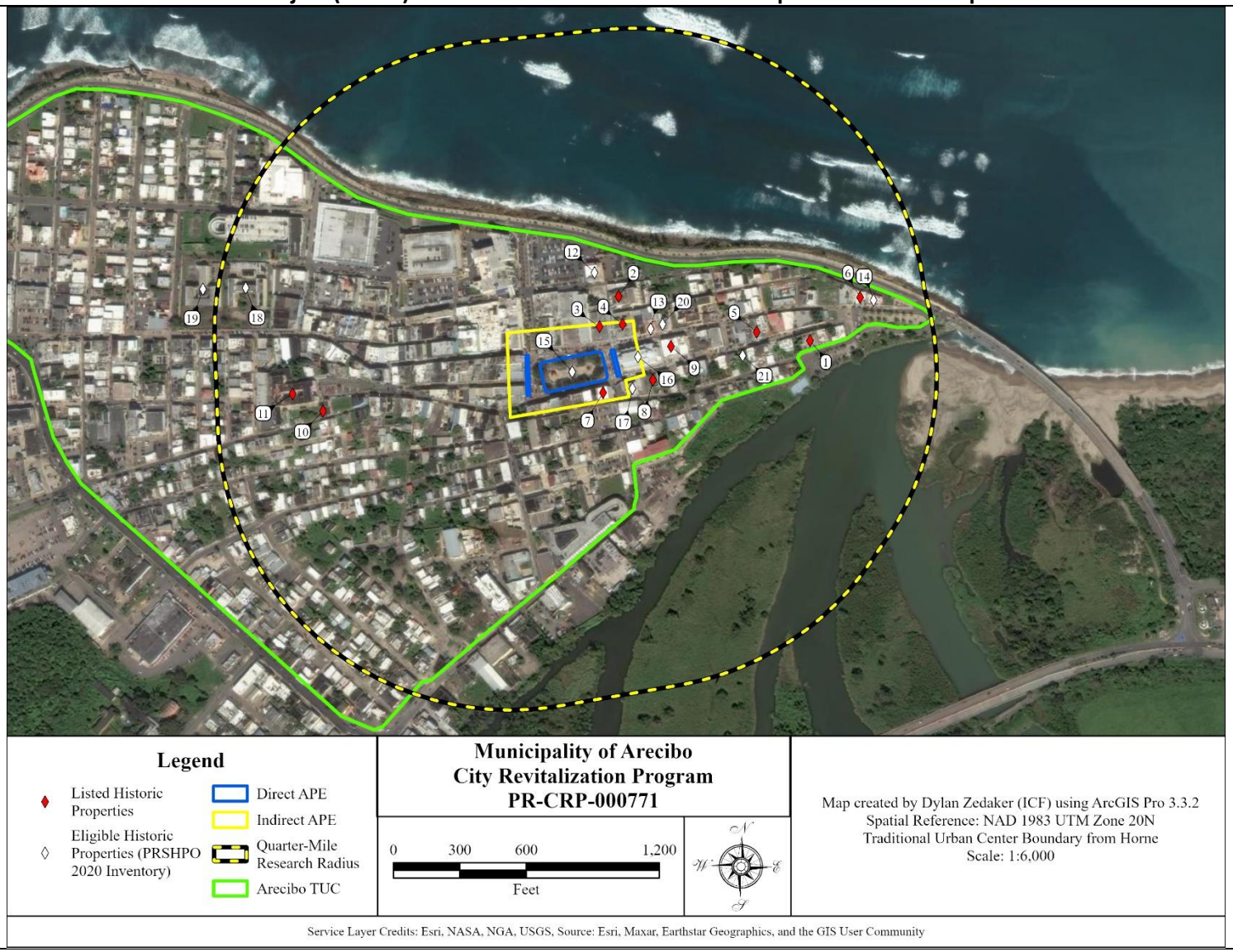

Project (Parcel) Location with Identified Historic Properties – USGS Topographic Map

Project (Parcel) Location with Identified Archaeological Resources – Aerial Map

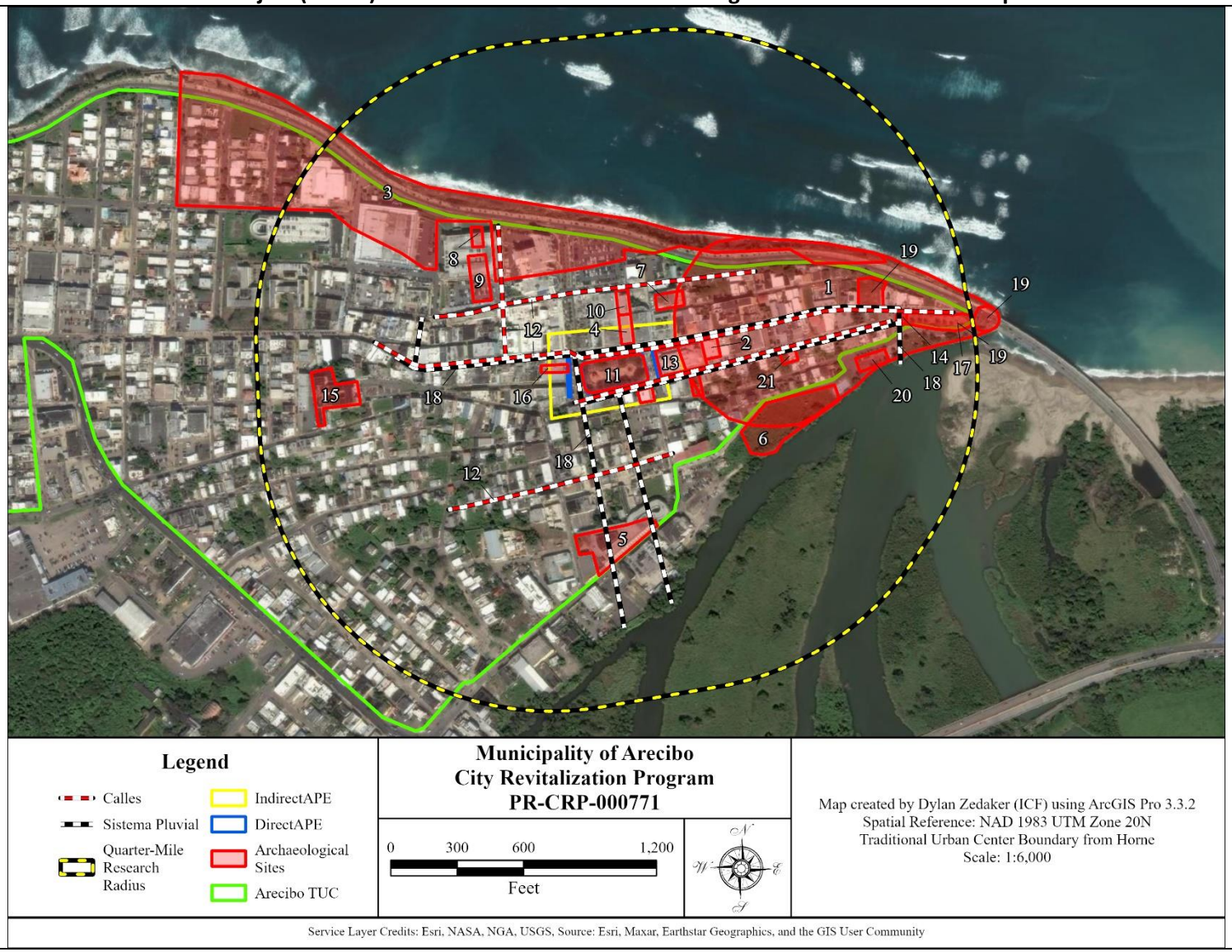

Project (Parcel) Location with Identified Archaeological Resources – USGS Topographic Map

Puerto Rico 2017 Disaster Recovery, CDBG-DR Program City Revitalization Program (City-Rev) Section 106 NHPA Effect Determination	DEPARTMENT OF HOUSING GOVERNMENT OF PUERTO RICO
Subrecipient: Municipality of Arecibo	
Case ID: PR-CRP-000771	**City**: Arecibo, PR
Project Name: Revitalization of Plaza Luis Muñoz Rivera in the Urban Center of Arecibo	

Project (Parcel) Location with Previous Investigations - Aerial Map

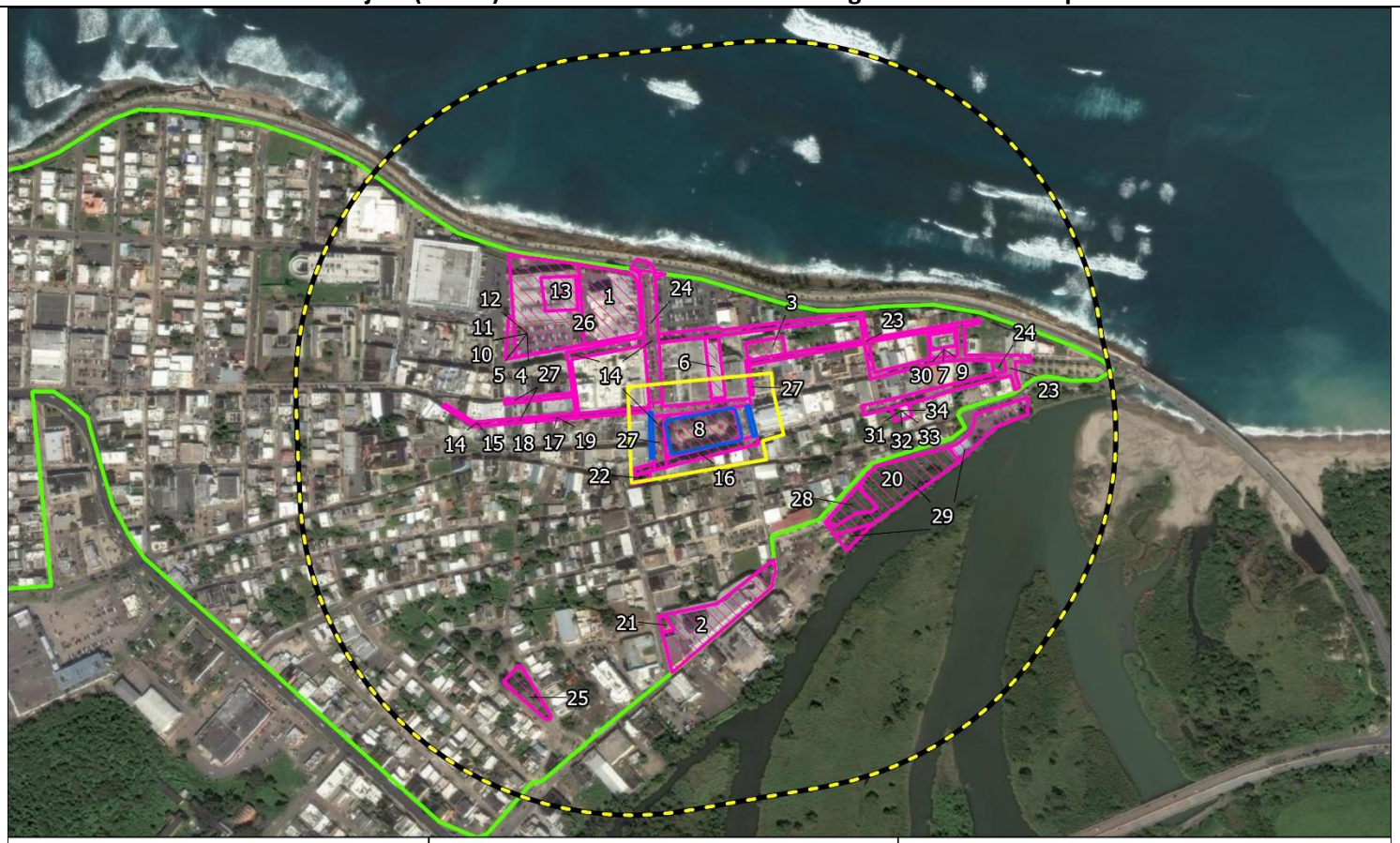

Project (Parcel) Location with Previous Investigations – USGS Topographic Map

Photograph Key[59]

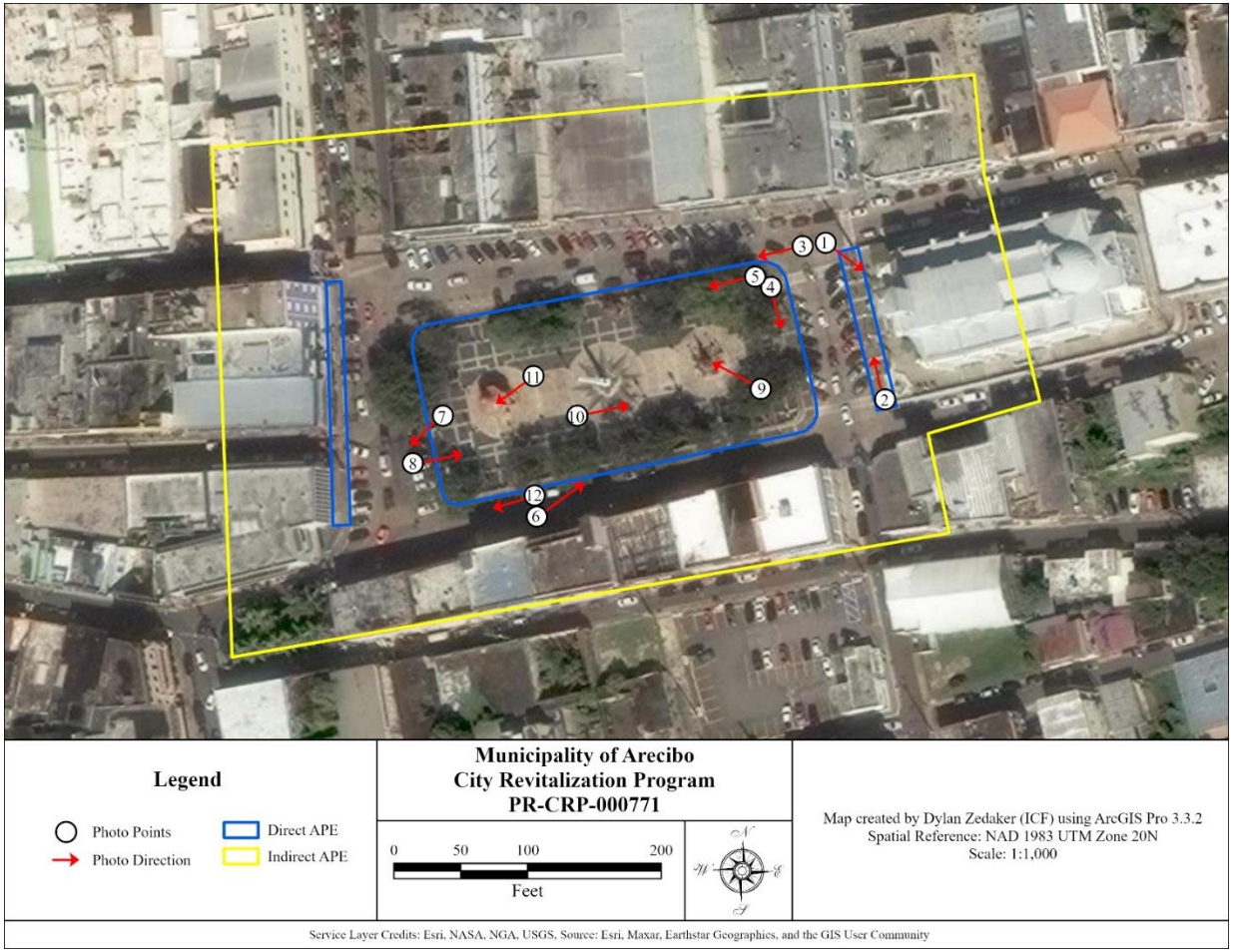

[59] Map produced by Dylan Zedaker (ICF) based on the photographs taken by Antonio Pontón González.

Photo #: 1	**Description:** Catedral San Felipe Apóstol
Date: Feb. 24, 2023	**Direction:** Southeast

Photo #: 2	**Description:** Catedral San Felipe Apóstol
Date: Feb. 24, 2023	**Direction:** North

Photo #: 3	**Description:** José De Diego Ave.
Date: Feb. 24, 2023	**Direction:** West

Photo #: 4	**Description:** Fencing/ Railing on the east side of the ***Plaza***
Date: Feb. 24, 2023	**Direction:** Southwest

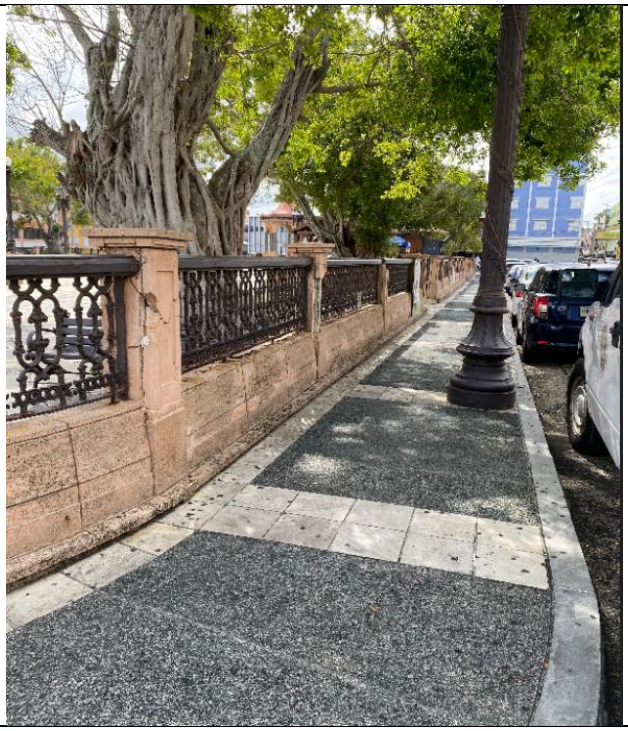

Photo #: 5	**Description:** Fencing/ Railing on the north side of the ***Plaza***
Date: Feb. 24, 2023	**Direction:** West

Photo #: 6	**Description:** Fencing/ Railing on the south side of the ***Plaza***
Date: Feb. 24, 2023	**Direction:** Northeast

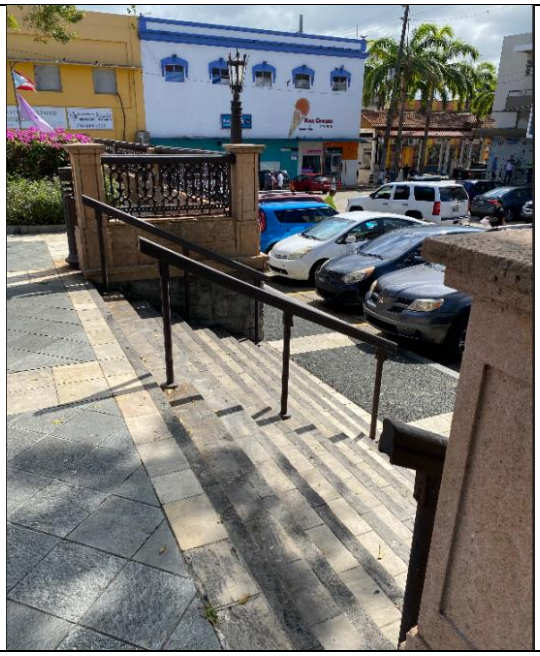

Photo #: 7	**Description:** Stair entrance on the west side of the ***Plaza***
Date: Feb. 24, 2023	**Direction:** Southwest

Photo #: 8	**Description:** Closeup of the existing fencing/ railing of the ***Plaza***
Date: Feb. 24, 2023	**Direction:** East

Photo #: 9	**Description:** The main fountain
Date: Feb. 24, 2023	**Direction:** Northwest

Photo #: 10	**Description:** The monolith statue and the Cathedral
Date: Feb. 24, 2023	**Direction:** West

Photo #: 11	**Description:** Gazebo building
Date: Feb. 24, 2023	**Direction:** West

Photo #: 12	**Description:** Cactú Restaurant
Date: Feb. 24, 2023	**Direction:** West

References

Abreu, Sara E, "La economía de Arecibo al 1930: Notas para su historia en datos" (MS: Arecibo, Puerto Rico), Access: https://www.arecibo.inter.edu/wp-content/uploads/biblioteca/pdf/Registro_de_comercios_en_Arecibo.pdf.

Cadilla, Francisco M, *Los ochocentistas*, Barcelona: Ediciones Rumbos, 1961.

Cruz Ramírez, Eileen Y, *Arecibo Notas para su Historia*, San Juan, Puerto Rico: Oficina Estatal de Conservación Histórica, 1986.

Del Campo, Félix Julián, (MS: San Juan, Puerto Rico, no date), 30-55.

Department of the Interior, Historic American Engineering Record (HAER), "Puente del Caño Perdomo (Bridge No 54) City of Arecibo / Tanamá Neighborhood Spanning the Caño Perdomo Channel, Arecibo, Arecibo County, Puerto Rico HAER No PR-39," MS: Washington DC, 2001.

_____, "Puente del Caño Carate (Bridge No 53) City of Arecibo / Tanamá Neighborhood Spanning the Caño Carate Channel, Arecibo, Arecibo County, Puerto Rico HAER No PR-40," MS: Washington DC, 2001.

_____, "Puente del Caño San Francisco (Bridge No 47) City of Arecibo / Tanamá Neighborhood Spanning the Caño San Francisco Channel, Arecibo, Arecibo County, Puerto Rico HAER No PR-47," MS: Washington DC, 2001.

_____, "Puente del Río Grande de Arecibo (Bridge No 44) City of Arecibo / Cambalache Neighborhood Spanning the Rio Grande Arecibo Channel, Arecibo, Arecibo County, Puerto Rico HAER No PR-42," MS: Washington DC, 2001.

Department of Transportation and Public Works, Puerto Rico Highway Authority, San Juan, Puerto Rico, "Alternative Analysis Replacement of Bridges Number 44-54 over the Grande de Arecibo River [*sic*] and other Bodies of Water PR-2 San Juan – Arecibo, AC-200083," MS; San Juan, Puerto Rico, 2000.

_____, "Final Version of Revised Documentation Replacement of Bridges 44-54 Arecibo, Puerto Rico, AC-200083, PRSHPO 03-29-99-02, HAER Numbers PR-39, PR-40, PR-41, and PR-42," MS: San Juan, Puerto Rico, 2001.

_____, Puerto Rico Highway Authority, San Juan, Puerto Rico, "A Special Report on Puerto Rico Highway Authority," MS: Government Development Bank, 1968, Access: https://issuu.com/coleccionpuertorriquena/docs/prha_june_1968.

Herrera Valencia, Karen Noemí, "Recuperando la historia eliminada del Arrabal La Playa de Arecibo," *Ingenios revista de investigación y labor creativa* (San Juan, Puerto Rico, 2018), Access: https://www.ingeniosupr.com/vol-5-1/2018/10/13/recuperando-la-historia-eliminada-del-arrabal-la-playa-de-arecibo.

Institute of Puerto Rican Culture, San Juan, Puerto Rico, "Zona Histórica de Arecibo Propuesta 2020-2011," MS: Patrimonio Histórico Edificado Unit, 2011.

Méndez Bonilla, Ivan F, "Evaluación de Recursos Culturales Fases I-A – I-B Proyecto: Reemplazo de Once (11) Puentes sobre el Río Grande Arecibo Puentes #54 y #1038 entre intersección carreteras PR-2 y PR-10 e intersecciones PR-2 y PR-681, Arecibo, Puerto Rico," MS: Carolina, Puerto Rico 1999.

Mercado Díaz, Mario, "'El pueblo murió:' La crisis económica de Arecibo," *Prensa sin prisa*, 23 October 2015; Access: https://www.80grados.net/el-pueblo-murio-la-crisis-economica-de-arecibo-puerto-rico/.

Oliver Aresti, José R, "Aportaciones a la Historia de Arecibo: de la 'Fundación' o 'No Fundación' de Arecibo, MS: Arecibo, Puerto Rico, 1951.

Pabón Charneco, Arleen, *La arquitectura patrimonial puertorriqueña y sus estilos*, San Juan, Puerto Rico: Oficina Estatal de Conservación Histórica, 2010.

Puerto Rico State Historic Preservation Office, San Juan, Puerto Rico, "Proyecto de reconocimiento de inventario de centros urbanos de los 78 municipios de Puerto Rico," 2020-In progress.

Puerto Rico Department of Transportation and Public Works. 2025, Geographic Information Systems Office, Puerto Rico Highway and Transportation Authority. Electronic Document. https://fotosaereas.dtop.pr.gov/apps/Shop_ACTGIS/ accessed February 9, 2025.

_____, "Sitios Arqueológicos de Arecibo - Resumen Arqueológico del Municipio de Arecibo," 2016, Access: https://oech.maps.arcgis.com/apps/PublicInformation/index.html?appid=44cae07145c849d0950a4f7db40f9ef2.

Pumarada, O'Neill, Luis F, "Historic Bridges in Puerto Rico National Register of Historic Places Thematic Nomination," San Germán, Puerto Rico, 1995.

Rouse, Irving, *Scientific Survey of Porto Rico and the Virgin Islands*, New York: New York Academy of Sciences, 1952.

Thompson, Lanny and María Dolores Luque (editors), *The Cartographic Journey of Lieutenant William H Armstrong* (Colombia, Editorial Nomos S A, 2020), Volume 1.

United States Department of Agriculture. 2025, Soil Survey Staff, Natural Resources Conservation Service, United States Department of Agriculture. Web Soil Survey. Electronic document. https://websoilsurvey.sc.egov.usda.gov/ accessed March 3, 2025.

United States Geological Service. 2025, USGS Earth Explorer Historic Aerial Image Database. Electronic document. https://earthexplorer.usgs.gov/ accessed March 3, 2025.

US Army Corps of Engineers, Jacksonville, Florida, "Report for PR-2 Bridge over Rio Grande Arecibo," MS: Jacksonville, Florida, 1999.

Velázquez, Cynthia, *Arecibo . . . Así era*, Ponce, Puerto Rico: Imprenta Las Américas, 1998.

PR-CRP-000771

Revitalization of Plaza Luis Muñoz Rivera in the Urban Center Project

Arecibo, Puerto Rico

90% Design Drawings

D R A W I N G S   F O R :

REVITALIZATION OF LUIS MUÑOZ RIVERA PLAZA IN URBAN CENTER

ARECIBO, PUERTO RICO

90% DESIGN

IGLESIAS • VAZQUEZ and ASSOCIATES

320 CALLE FORTALEZA SAN JUAN, PUERTO RICO 00901 TEL. 721–4545/ FAX: 722–1184

E N G I N E E R S • A R C H I T E C T S • P L A N N E R S

HONORABLE CARLOS RAMIREZ IRIZARRY

LOCATION PLAN SCALE=1:20,000

LAMBERT COORDINATE: X =170153.4029 Y =270709.8656

INDEX OF DRAWINGS

DWG	DESCRIPTIONS	SHEET
TS–1	TITLE SHEET & LOCATION	1
TS–2	ABBREVIATIONS GENERAL NOTE & LEGEND	2
USI–1	EXISTING SITE PLAN	3
USI–2	EXISTING TOPOGRAPHIC SITE PLAN	4
USI–3	PROPOSED GRADING SITE PLAN	5
USI–4	PROPOSED STAGING PLAN AND TEMPORARY FENCE SITE PLAN	6
SS–1	BORING LOCATION PLAN	7
AD–1	EXISTING AND DEMOLITION PLAZA FLOOR PLAN	8
AD–2	EXISTING AND DEMOLITION EXISTING ELEVATION	9
AD–3	EXISTING AND DEMOLITION PLAZA MISCELLANEOUS DETAILS	10
AD–4	EXISTING AND DEMOLITION PLAZA MISCELLANEOUS DETAILS	11
A–1	PROPOSED ARCHITECTURAL PLAZA SITE PLAN	12
A–2	PROPOSED PLAZA FLOOR PLAN	13
A–3	PROPOSED ELEVATIONS	14
A–4	PROPOSED SECTIONS	15
A–5	PROPOSED PLAZA RAILING PLAN AND SECTIONS	16
A–6	PROPOSED RAILING WALL SECTIONS	17
A–7	PROPOSED TYP. EXISTING STAIR BLOW UP AND RAILING DETAILS	18
A–8	PROPOSED PLAZA MISCELLANEOUS DETAILS	19
A–9	PROPOSED PLAZA MISCELLANEOUS DETAILS	20
A–10	PROPOSED BLOW UP FLOOR PLAN AND SECTIONS REINA ISABEL II	21
A–11	PROPOSED ELEVATION AND SECTION REINA ISABEL II	22
A–12	PROPOSED BLOW UP SCULPTURE FLOOR PLAN AREA ELEVATIONS DETAILS	23
A–13	PROPOSED UP FOUNTAIN FLOOR PLAN AREA ELEVATIONS DETAILS	24
A–14	PROPOSED FLOOR AND ROOF PLANS MECH. AND ELECT. ROOM	25
A–15	PROPOSED ELEVATIONS AND SECTIONS MECH. AND ELECT. ROOM	26
A–16	PROPOSED ROOF PLANS MECH. AND ELECT. ROOM	27
A–17	PROPOSED DOORS AND WINDOWS SCHEDULE	28
A–18	PROPOSED FINISHES SCHEDULES, NOTES AND DETAILS	29
A–19	PROPOSED FLOOR TILES LAYOUT	30
S–1	PROPOSED ELECTRICAL AND MECHANICAL BLDG. FOUNDATION PLAN AND DETAILS	31
S–2	TYPICAL STRUCTURAL SECTIONS AND DETAILS	32
S–3	PROPOSED STRUCTURAL ROOF PLAN	33
S–4	PROPOSED FOUNTAIN FOUNDATION PLAN	34
S–5	ISABEL II STATUE & LIONS MONUMENTS AREA STRUCTURAL LAYOUT PLAN	35
S–5	CONCRETE RAILINGS PLAN, ELEV., STRUCTURAL SECTIONS AND DETAILS	36
PD–1	EXISTING AND DEMOLITION PLAZA PLUMBING DISTRIBUTION PLAN	37
P–1	PLUMBING GENERAL NOTES AND DETAILS	38
P–2	PROPOSED PLAZA PLUMBING DISTRIBUTION PLAN	39
P–3	PROPOSED PLAZA PLUMBING DIST. ENLARGE PLAN AND DETAIL	40
PE–1	EXISTING AND DEMOLITION PLAZA–ELECTRICAL INSTALLATION	41
E–1	PLAZA FLOOR PLAN ELECTRICAL INSTALLATION	42
E–2	ELECT. & MECH. ROOMS, KIOSK & FOUNTAIN AREA BLOW–UPS	43
E–3	ELECT. & MECH. ROOMS, KIOSK & FOUNTAIN AREA BLOW–UPS	44
E–4	NOTES, LEGEND & DETAIL	45
E–5	LUMINARY & TIME SWITCHES SCHEDULES	46

DATE	REVISIONS

N:\Proj\ARECIBO\903 PLAZA ARECIBO\DWG'S\001-903TS-1.dwg

TS-1

ABBREVIATIONS

ABUT.	Abutment	J.B.	Junction Box	W.M.	Water Main
A.D.	Algebraic Difference in Grades, Percent	K	Vertical Curvature Design Control	W.MTR.	Water Meter
AGG.	Aggregate	LT.	Left	W.V.	Water Valve
AH.	Ahead	L.	Length of Curve	W.W.	Wing Wall
AL.	Aluminum	L.P.	Light Pole	W.M.F.	Wire Mesh Fence
ASB.	Asbestos	M.B.	Mail Box	W.I.	Wrought Iron
ASPH.	Asphalt	M.L.	Main Line		
BK.	Back	M.H.	Manhole		
B.L.	Base line	MAX.	Maximum		
B.W.F.	Barbed Wire Fence	M.H.W.	Mean High Water		
B.V	Bearing Value	M.S.L.	Mean Sea Level		
B & S	Bell and Spigot	MIN.	Minimum		
B.M.	Bench Mark	MON.	Monument		
BIT. CONC.	Bituminous Concrete	O.C.	On Centers		
B.C.C.M.P.	Bituminous Coated Corrugated	O.D.	Outside Diameter		
BOTT., B.	BOTTOM	O. TO O.	Outside to Outside		
BLDG.	Building	P.P.	Power Pole		
C.I.	Cast Iron	PCC.	Point of Compound Curvature		
C.I.P.	Cast Iron Pipe	P.C.C.	Portland Cement Concrete		
C.B.	Catch Basin	PC	Point of Curvature		
C.L.	Center line	P.G.	Proposed Grade		
C. TO C., C.C.	Center to Center	PI	Point of Intersection		
CTD.	Coated	PL.	PLATE		
COL.	Column	P.L.	Property Line		
COM.	Communications	PRC	Point of Reverse Curve		
CONC.	Concrete	PROP.	Proposed		
C.O.A.	Control of Access	PT.	Point of Tangency		
COORD.	Coordinates	P.V.I.	Point of Vertical Intersection		
C.M.	Corrugated Metal	PVMT.	Pavement		
C.M.P.	Corrugated Metal Pipe	PWR.	Power		
CU.M.	Cubic Meter	R.	Radius of Curvature		
CULV.	Culvert	R.C.P.	Reinforced Concrete Pipe		
CS.	Curve to Spiral	R. C. J.	Rubber Gasket Joint		
C.	Cut	R.R.	Railroad		
CLC	CLEAR COVER	REINF.	REINFORCEMENT		
DEG.	Degree	RET.	Retaining		
DEM.	Demolish	REM.	Remove		
DIA.	Diameter	RT.	Right		
DIM.	Dimension	R.O.W.	Right Of Way		
DWG.	Drawing	RD.	Road		
DWY.	Driveway	RDWAY.	Roadway		
E.H.W.	Extreme High Water	SAN.S.	Sanitary Sewer		
ELEV.	Elevation	S.M.H.	Sanitary Sewer Manhole		
E. TO E.	End to End	SHDR.	Shoulder		
ENGR.	Engineer	SW.	Sidewalk		
EST.	Estimate	SC.	Spiral to Curve		
EXC.	Excavation	ST.	Spiral to Tangent		
EXIST.	Existing	SQ.M.	Square Meter		
E.G.	Existing Ground	STA.	Station		
EXP.	Expansion	S.S.	Storm Sewer		
EXT.	External	STL.	STEEL		
E.D.	External Distance	STR.	Structure		
F. TO F.	Face to Face	S.G.	Subgrade		
FA.	Federal Aid	S.L.	Survey Line		
FAP.	Federal Aid Primary	TOP, (T)	REINFORCEMENT AT TOP		
FAS.	Federal Aid Secondary	T.	Tangent Distance of Curve		
F.	Fill	T.E.	Top Elevation		
F.L.	Flow Line	T.G.	Top of Grate		
FWD.	Forward	T.O.C.	Top of Cut		
G.I.	Galvanized Iron	T.O.S.	Toe of Slope		
GALV.	Galvanized	T.P.	Telephone Pole		
G.	Gas	TS.	Tangent to Spiral		
G.V.	Gas Valve	TEL.	Telephone		
GRAV.	Gravel	T.O.W.	TOP OF WALL		
GRD.	Ground	UG.	Underground		
H.D.G.	HOT DIPPED GALVANIZED	VC.	Vertical Curve		
H.W.	High Water	VERT.	Vertical		
HOR.	Horizontal				
HYD.	Hydrant				
INV.	Invert				
I.E.	Invert Elevation				

GENERAL NOTES

GENERAL NOTES:

1. ALL ELEVATIONS ARE REFEREED TO MEAN SEA LEVEL AND GIVEN IN METERS.
2. ALL COORDINATES USED ARE REFERRED TO NAD 83 SYSTEM.
3. NORTH INDICATOR POINTS TO MAGNETIC NORTH.
4. THE CONTRACTOR SHALL MAGNETIC FREE ACCESS TO ALL PROPERTIES ALONG THE EXTERIOR PERIMETER THE PROJECT DUELING THE DURATION OF THE CONSTRUCTION OF THIS PROJECT.
5. METRIC SYSTEM HAS BEEN USED THROUGHOUT THE PROJECT UNLESS OTHERWISE SPECIFIED.
6. BORING LOGS PROFILES SHOWN ON THE PLANS WERE OBTAINED BY THE FIRM OF SUELOS INC. FOR USED IN THE PREPARATION OF THIS PROJECT PLANS.
7. THE CONTRACTOR SHALL BE RESPONSIBLE FOR PROTECTING FROM EROSION ALL EMBANKMENTS BY CONSTRUCTING BEAMS AND DISPOSING SURFACE WATER AT CONTROLLED POINTS AT NO EXTRA COST TO THE OWNER.
8. ANY UTILITY DAMAGES OCCURRING THAT ARE NOT SCHEDULED IN THE PLANS SHALL BE REPAINTED AT THE CONTRACTOR'S EXPENSE.
9. PRIOR TO CONSTRUCTION THE CONTRACTOR SHALL SUBMIT HIS COMMENTS OR QUESTIONS TO THE ENGINEER ABOUT CONFLICTS DISCREPANCIES PERMIT CLEARANCES THAT MAY CAUSE UNSCHEDULED DELAYS TO THE CONTRACTOR.
10. CONTINUOUS MAINTENANCE SHALL BE KEPT FOR ALL PERMANENT AND PROVISIONAL DRAINS DURING THE CONSTRUCTION.
11. THE CONTRACTOR SHALL PROVIDE ALL TEMPORARY DRAINAGE NEEDED DURING CONSTRUCTION.
12. ALL EXISTING PROJECT ELEMENTS THAT REQUIRE REMOVAL IN ORDER TO PERFORM ANY TASK RELATED TO COMPLETE THE PROJECT SHALL BE RESTORED TO ITS ORIGINAL POSITION UNLESS OTHER WISE INDICATED THE ORIGINAL POSITION VERTICAL AND HORIZONTALLY SHALL BE THE SAME. IF NECESSARY ANY DAMAGE PART TO THE FENCE OCCURRED WHILE REMOVAL SHALL BE REPLACED. PRIOR TO REMOVAL PHOTOS SHALL BE TAKEN AND FIELD FOR ANY FUTURE USE. THIS WORK SHALL BE COMPLETED AT THE CONTRACTOR'S EXPENSES.
13. CONTRACTOR MUST CONTAIN WORK WITHIN PROJECT LIMITS (SEE USI-1) AND THAT THE IS RESPONSIBLE FOR ANY DAMAGE TO PRIVATE PROPERTY AT THIS OWN EXPENSES.
14. THE CONTRACTOR IS RESPONSIBLE TO PREPARE ALL DOCUMENTS IN ORDER TO SUBMIT FOR APPROVAL OF THE "PERMISO GENERAL CONSOLIDADO", AND IT'S IMPLEMENTATION MAINTENANCE AND INSPECTION REPORT.
15. THE CONTRACTOR SHALL CONSIDER AND TAKE INTO ACCOUNT THAT ALL COMMERCIAL AND HOUSES WILL REMAIN OPERATIONAL DURING THE PROJECT CONSTRUCTION. THE CONTRACTOR WILL COORDINATE WITH OWNERS AND MUNICIPALITY OF ARECIBO & OTHER COMMERCIAL AND HOUSES ANY CONSTRUCTION ACTIVITIES THAT IMPACT THEIR OPERATIONS.
16. ALL EXISTING STORM SEWER TO REMAIN WITHIN THE PROJECT AND AROUND IT SHALL BE MAINTAINED. CLEAN AND OPERABLE AT ANY TIME DURING CONSTRUCTION OF PROJECT AT NO EXTRA COST TO THE OWNER.
17. UNSUITABLE MATERIAL SHALL BE DISPOSED BY THE CONTRACTOR IN PLACES APPROVED BY THE BEGINNER THE COST OF REMOVAL AND DISPOSAL SHALL BE CONSIDERED IN BASE BID PRICE.
18. CONTINUOUS MAINTENANCE SHALL BE KEPT FOR ALL PERMANENT AND PROVISIONAL DRAINS DURING THE CONSTRUCTION OF THE PROJECT.
19. THE CONTRACTOR SHALL BE DEPOSABLE OF STORAGE AND DELIVERY TO OWNER DESIGNATE LOCATION OFF ALL EXISTING EQUIPMENT TO BE REMOVED FROM EXISTING FOUNTAIN.
20. THE CONTRACTOR WILL BE RESPONSIBLE TO PROTECT FROM DAMAGE AND MAINTAIN EXISTING TREES IN THE PLAZA. MAINTENANCE WILL REQUIRE PROTECTING THE OPEN EARTH AREA AROUND THE ROOTS TO PREVENT THE DEPOSIT OF CONSTRUCTION DEBRIS AND LOOSE CEMENT POWDER.
21. THE CONTRACTOR WILL BE RESPONSIBLE TO PROTECT THE EXISTING "PUMA DE MUNOZ RIVERA" MONOLITH SCULPTURE DURING CONSTRUCTION FROM DAMAGES AND TO MAINTAIN THE EXISTING CONDITION AT ALL TIMES.

LEGEND

FEATURE	SYMBOL PROPOSED	SYMBOL EXISTING	REMARKS
SANITARY PIPE	S	S S	IDENTIFY SIZE TYPE & FLOW
SANITARY FORCE LINE			
STORM SEWER PIPE		SS SS	
WATER LINE	W	W W	
GAS LINE	GAS		
HEADWALLS	OR OR	OR OR	AS PER TYPE
SANITARY MANHOLE			IDENTIFY
STORM SEWER MANHOLE			
INLETS			IDENTIFY AS PER TYPE
WATER COURSE			IDENTIFY
SWALE			IDENTIFY
CONC. DITCH			IDENTIFY
PAVED DITCH			IDENTIFY
LAKE OR POND			IDENTIFY
SWAMP			IDENTIFY IF REQ.
WOODS		W	IDENTIFY IF REQ.
TREES	X X		IDENTIFY IF REQ.
EDGE OF WOODS			IDENTIFY IF REQ.
HEDGE			IDENTIFY IF REQ.
STATION NUMBER	00+000		
RIP RAP PAVING			IDENTIFY
ROCK			IDENTIFY
BLDG. TO DEM.			IDENTIFY TYPE, ETC.
SIGNS, GROUND,MTD.			
SIGNS OVERHEAD			
PROP. SIGN IDENT.	2/10		UPPER – CODE LOWER– LOCATION
CENTER LINE			IDENTIFY
SURVEY MONUMENT			IDENTIFY
SPOT ELEVATION	+135.00	134.25	DECIMAL POINT AT SPOT ELEV.
BENCH MARK		B.M. X NO.3	IDENTIFY
HORIZONTAL P.I.		V-3	IDENTIFY
CONTOUR LINES	90	90	
PAVEMENT			IDENTIFY ROAD
SIDEWALK	SW	SW	IDENTIFY
CURB			IDENTIFY
GUARD RAIL			IDENTIFY TYPE
BARRIER			IDENTIFY TYPE
BARRICADE			IDENTIFY
RETAINING WALL			IDENTIFY TYPE
CONC. PARAPETS			
WIRE FENCE			IDENTIFY TYPE
CYCLONE FENCE			IDENTIFY TYPE
PROPERTY LINE (a)			
R.O.W LINE & MON. (a)			IDENTIFY IF C.O.A.
ACCESS CONTROL			IDENTIFY LIMITS
TOP OF CUT	T.O.C.	T.O.C.	
TOE OF SLOPE	T.O.S.	T.O.S.	
BORING LOCATION			
COORDINATE GRID	E=0,000.00 N=0,000.00		
NEW. CONCRETE BLOCK WALL			
REINFORCED CONCRETE WALL			
FINISH FLOOR INDICATION	85.15		
BORING			IDENTIFY BORING LOCATION
FIRE HYDRANT	NFH	EFH	

FEATURE	SYMBOL PROPOSED	SYMBOL EXISTING	REMARKS
SECTION	A		
DETAILS	1		
REFERENCES AXIS LINES	1 / A		
LEVEL LINE			
BREAK LINE			
DEMOLITION AREA			
WET LAND AREA			
ADDED VALUE			
PHASE UNDER CONSTRUCTION			
STRUCTURAL SECTION	1		
STRUCTURAL DETAILS	A		
TOP OR BOTTOM VEIW			
CONCRETE CIRCULAR PILES			
CONCRETE SQUARE PILES			
STEEL PILES "H" TYPE			

LEGEND:

- SS SS — EXIST STORM SEWER LINE
- S S — EXIST SANITARY LINE
- W W — EXIST WATER LINE
- E E — EXIST UNDERGROUND ELECTRICAL LINE
- AE — EXIST. ELECTRICAL LINE
- U U — EXIST UNKNOWN UNDERGROUND UTILITIES
- T T — EXIST UNDER GROUND TELECOMUNICATION
- BENCH MARK
- HORIZONTAL CONTROL STATION
- EXISTING CYCLONE FENCE
- EXIST. BLOCK FENCE
- EXIST. ORNAMENTAL FENCE
- EXIST. IRON FENCE
- EXIST. BARBED WIRE FENCE
- EXIST. HOUSE
- EXIST. GUARD RAIL
- EXIST. CURB
- EXIST. SCHOOL
- EXIST. SANITARY MH
- EXIST. STORM SEWER MH
- EXIST. TELEPHONE MH
- EXIST. CATCH BASIN
- NEW CATCH BASIN
- EXIST. ELECTRICAL OR LUMINARY POLE
- EFH EXIST. FIRE HYDRANT
- NFH NEW EXIST. FIRE HYDRANT
- 0.00 EXIST. ELEVATION
- 0+000 NEW ELEVATION
- NEW SANITARY MH
- NEW SANITARY PIPE
- WV EXIST. WATER VALVE
- EXIST. TELEPHONE BOOTH
- WM EXIST. WATER METER
- WM NEW WATER METER
- EXIST. S. SEWER COVER
- NEW S. SEWER COVER
- NEW CHAIN LINK FENCE

REVITALIZATION OF
LUIS MUÑOZ RIVERA PLAZA
IN THE URBAN CENTER
ARECIBO, PUERTO RICO

IGLESIAS•VAZQUEZ and ASSOCIATES
ENGINEERS • ARCHITECTS • PLANNERS
320 FORTALEZA STREET 2nd FLOOR SAN JUAN, PUERTO RICO 00902 TELS. 721-4545 721-4546

SHEET TITLE: ABBREVIATIONS GENERAL NOTE & LEGEND
SCALE: AS SHOWN

CODE NO: 08-903-TS2

DRAWING NO: TS-2

DATE	REVISIONS

SHEET NO: 2 OF 00

N:\Proj\ARECIBO\903 PLAZA ARECIBO\DWG'S\002-903TS-2.dwg

REVITALIZATION OF LUIS MUÑOZ RIVERA PLAZA IN THE URBAN CENTER

ARECIBO, PUERTO RICO

IGLESIAS • VAZQUEZ and ASSOCIATES
ENGINEERS • ARCHITECTS • PLANNERS
320 FORTALEZA STREET 2nd FLOOR SAN JUAN, PUERTO RICO 00902 TELS. 721-4545 721-4546

PALMA STREET

LAB. CLINICO TOLEDO LLC (AAA, LENEL ROYAL ROOM)

LAB. CLINICO TOLEDO LLC LENEL ROYAL ROOM)

APS CLINICS

NADER ABDULLAH AL-KHATIB (GRAND STORES)

ARECIBO CITY HALL

JAURREGUI STR

COND. OLIVER

JOSE DE DIEGO AVE.

RAFAEL CAMPOS MARQUES

GRACIANO MARTINEZ SERRANO

MARIA DE L. VELASCO ALVAREZ (TACOS KIKO)

PLAZA LUIS MUÑOZ RIVERA

MARIA DE HOSTOS STREET

CATEDRAL SAN FELIPE APOSTOL

PALMA STREET

BETANCES STREET

GONZALEZ MARIN STREET

SONRISAS DE ARECIBO

MANUEL GALAN PEREZ (OFICINA CONSORCIO DE ARECIBO)

SUCN. JORGE ESTEVA GIRAL

JUAN A. NUNEZ CRUZ

ARASIBO STEAKHOUSE

RAUL ORRIOLA HERNANDEZ

JOSE A. MONTIJO SOLER

MARILIA MERCADO SABINO

DACO

PLAZA DEL DOMINO

EXISTING SITE PLAN

SCALE: 1:200

NORTH

SHEET TITLE: EXISTING SITE PLAN

SCALE: AS SHOWN

CODE NO: 08-903-

DRAWING NO: USI-1

SHEET NO: 3 OF 00

DATE	REVISIONS

N:\Proj\ARECIBO\903 PLAZA ARECIBO\DWG'S\003-903USI-1.dwg

REVITALIZATION OF LUIS MUÑOZ RIVERA PLAZA IN THE URBAN CENTER
ARECIBO, PUERTO RICO

IGLESIAS • VAZQUEZ and ASSOCIATES
ENGINEERS • ARCHITECTS • PLANNERS
320 FORTALEZA STREET 2nd FLOOR SAN JUAN, PUERTO RICO 00902 TELS. 721-4545 721-4546

SHEET TITLE: EXISTING TOPOGRAPHIC SITE PLAN
SCALE: AS SHOWN

CODE NO: 08-903-

DRAWING NO: USI-2

SHEET NO: 3 OF 00

DATE	REVISIONS

EXISTING TOPOGRAPHIC SITE PLAN
SCALE: 1:200

NORTH

N:\Proj\ARECIBO\903 PLAZA ARECIBO\DWG'S\004-903USI-2EXIST TOPOGRAPHIC SITE.dwg

PALMA STREET

LAB. CLINICO TOLEDO LLC (AAA, LENEL ROYAL ROOM)

LAB. CLINICO TOLEDO LLC LENEL ROYAL ROOM)

APS CLINICS

NADER ABDULLAH AL-KHATIB (GRAND STORES)

ARECIBO CITY HALL

JAURREGUI STR

COND. OLIVER

JOSE DE DIEGO AVE.

RAFAEL CAMPOS MARQUES

GRACIANO MARTINEZ SERRANO

MARIA DE HOSTOS STREET

CATEDRAL SAN FELIPE APOSTOL

MARIA DE L. VELASCO ALVAREZ (TACOS KIKO)

PALMA STREET

BETANCES STREET

SONRISAS DE ARECIBO

GONZALEZ MARIN STREET

DACO

MANUEL GALAN PEREZ (OFICINA CONSORCIO DE ARECIBO)

MARILIA MERCADO SABINO

JOSE A. MONTIJO SOLER

RAUL ORRIOLA HERNANDEZ

ARASIBO STEAKHOUSE

JUAN A. NUNEZ CRUZ

SUCN. JORGE ESTEVA GIRAL

PLAZA DEL DOMINO

PROPOSED GRADING SITE PLAN

SCALE: 1:200

NORTH

LEGEND:

7.869 + EXISTING ELEV. TO REMAIN

7.869 + PROPOSED ELEV.

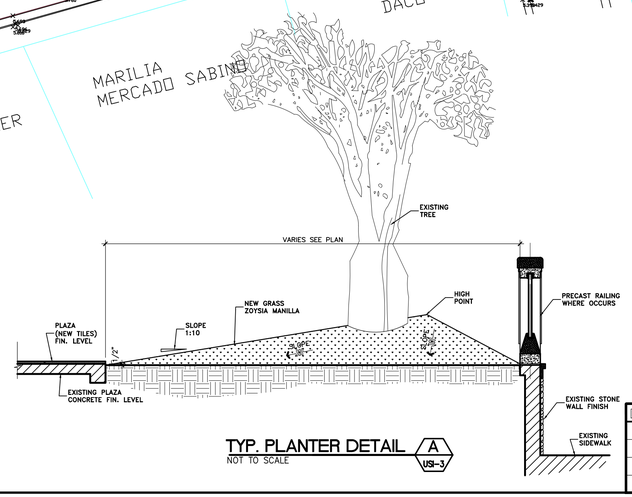

TYP. PLANTER DETAIL A

NOT TO SCALE

USI-3

N:\Proj\ARECIBO\903 PLAZA ARECIBO\DWG'S\005-903USI-3 PROP GRADING SITE PLAN.dwg

REVITALIZATION OF
LUIS MUÑOZ RIVERA PLAZA
IN THE URBAN CENTER
ARECIBO, PUERTO RICO

IGLESIAS•VAZQUEZ and ASSOCIATES
ENGINEERS • ARCHITECTS • PLANNERS
320 FORTALEZA STREET 2nd FLOOR SAN JUAN, PUERTO RICO 00902 TELS. 721-4545 721-4546

SHEET TITLE: PROPOSED GRADING SITE PLAN

SCALE: AS SHOWN

CODE NO: 08-903-

DRAWING NO: USI-3

DATE	REVISIONS

SHEET NO: 5 OF 00

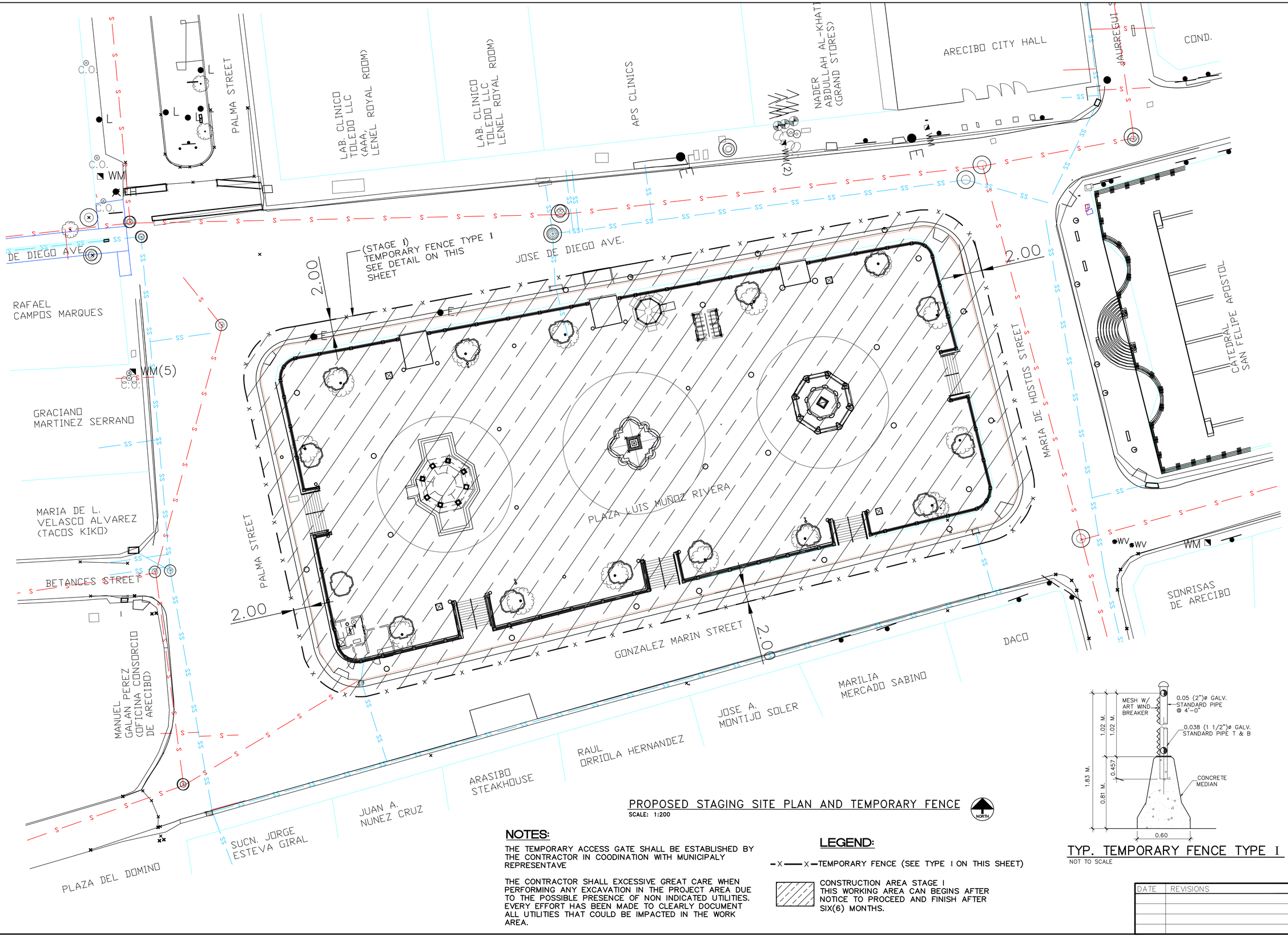

PROPOSED STAGING SITE PLAN AND TEMPORARY FENCE

SCALE: 1:200

NORTH

NOTES:

THE TEMPORARY ACCESS GATE SHALL BE ESTABLISHED BY THE CONTRACTOR IN COODINATION WITH MUNICIPALY REPRESENTAVE

THE CONTRACTOR SHALL EXCESSIVE GREAT CARE WHEN PERFORMING ANY EXCAVATION IN THE PROJECT AREA DUE TO THE POSSIBLE PRESENCE OF NON INDICATED UTILITIES. EVERY EFFORT HAS BEEN MADE TO CLEARLY DOCUMENT ALL UTILITIES THAT COULD BE IMPACTED IN THE WORK AREA.

LEGEND:

-X—X- TEMPORARY FENCE (SEE TYPE I ON THIS SHEET)

CONSTRUCTION AREA STAGE I
THIS WORKING AREA CAN BEGINS AFTER NOTICE TO PROCEED AND FINISH AFTER SIX(6) MONTHS.

TYP. TEMPORARY FENCE TYPE I

NOT TO SCALE

DATE	REVISIONS

REVITALIZATION OF
LUIS MUÑOZ RIVERA PLAZA
IN THE URBAN CENTER
ARECIBO, PUERTO RICO

IGLESIAS•VAZQUEZ and ASSOCIATES
320 FORTALEZA STREET 2nd FLOOR SAN JUAN, PUERTO RICO 00902 TELS. 721-4545 721-4546
ENGINEERS • ARCHITECTS • PLANNERS

SHEET TITLE:
PROPOSED STAGING PLAN AND TEMPORARY FENCE SITE PLAN

SCALE: AS SHOWN

CODE NO:
08-903-

DRAWING NO:
USI-4

SHEET NO:
6
OF
00

N:\Proj\ARECIBO\903 PLAZA ARECIBO\DWG'S\006-903USI-4 PROP TEMPOLARY FENCE STAGE 1.dwg

REVITALIZATION OF LUIS MUÑOZ RIVERA PLAZA IN THE URBAN CENTER ARECIBO, PUERTO RICO

IGLESIAS•VAZQUEZ and ASSOCIATES
ENGINEERS • ARCHITECTS • PLANNERS
320 FORTALEZA STREET 2nd FLOOR SAN JUAN, PUERTO RICO 00902 TELS. 721-4545 721-4546

JOSE DE DIEGO AVE.

PALMA STREET

LAB. CLINICO TOLEDO LLC (AAA, LENEL ROYAL ROOM)

APS CLINICS

NADER ABDULLAH AL-KHATIB (GRAND STORES)

ARECIBO CITY HALL

JAURREGUI STREET

COND. OLIVER

CATEDRAL SAN FELIPE APOSTOL

MARIA DE HOSTOS STREET

RAFAEL CAMPOS MARQUES

GRACIANO MARTINEZ SERRANO

MARIA DE L. VELASCO ALVAREZ (TACOS KIKO)

PLAZA LUIS MUÑOZ RIVERA

BETANCES STREET

MANUEL GALAN PEREZ (OFICINA CONSORCIO DE ARECIBO)

GONZALEZ MARIN STREET

SUCN. JORGE ESTEVA GIRAL

JUAN A. NUNEZ CRUZ

ARASIBO STEAKHOUSE

RAUL ORRIOLA HERNANDEZ

JOSE A. MONTIJO SOLER

MARILIA MERCADO SABINO

DACO

SONRISAS DE ARECIBO

PLAZA DEL DOMINO

BORING NO.1
X=170124.22
Y=270693.68
Z=7.876

BORING NO.2
X=170122.35
Y=270703.21
Z=7.952

BORING NO.3
X=170120.05
Y=270715.34
Z=7.897

BORING NO.4
X=170130.45
Y=270713.98
Z=8.017

BORING NO.5
X=170133.33
Y=270698.10
Z=7.915

BORING NO.6
X=170148.84
Y=270709.18
Z=7.937

BORING NO.7
X=170149.30
Y=270720.02
Z=7.960

BORING NO.8
X=170156.98
Y=270723.55
Z=7.997

BORING NO.9
X=170161.08
Y=270725.79
Z=8.039

BORING NO.10
X=170173.39
Y=270714.26
Z=7.963

BORING NO.11
X=170177.11
Y=270721.23
Z=8.020

BORING NO.12
X=170185.07
Y=270727.32
Z=8.023

BORING NO.13
X=170184.99
Y=270717.08
Z=7.957

BORING NO.15
X=170180.10
Y=270707.28
Z=7.875

BORING14
X=170191.04
Y=270707.84
Z=7.872

BORING LOCATION PLAN
SCALE: 1:200

NORTH

LEGEND
ORIGINAL SUELOS INC LOCATIONS

SHEET TITLE: BORING LOCATION PLAN
SCALE: AS SHOWN

CODE NO: 08-903-SS1

DRAWING NO: SS-1

SHEET NO: 7 OF 00

DATE	REVISIONS

N:\Proj\ARECIBO\903 PLAZA ARECIBO\DWG'S\007-903SS-1.dwg

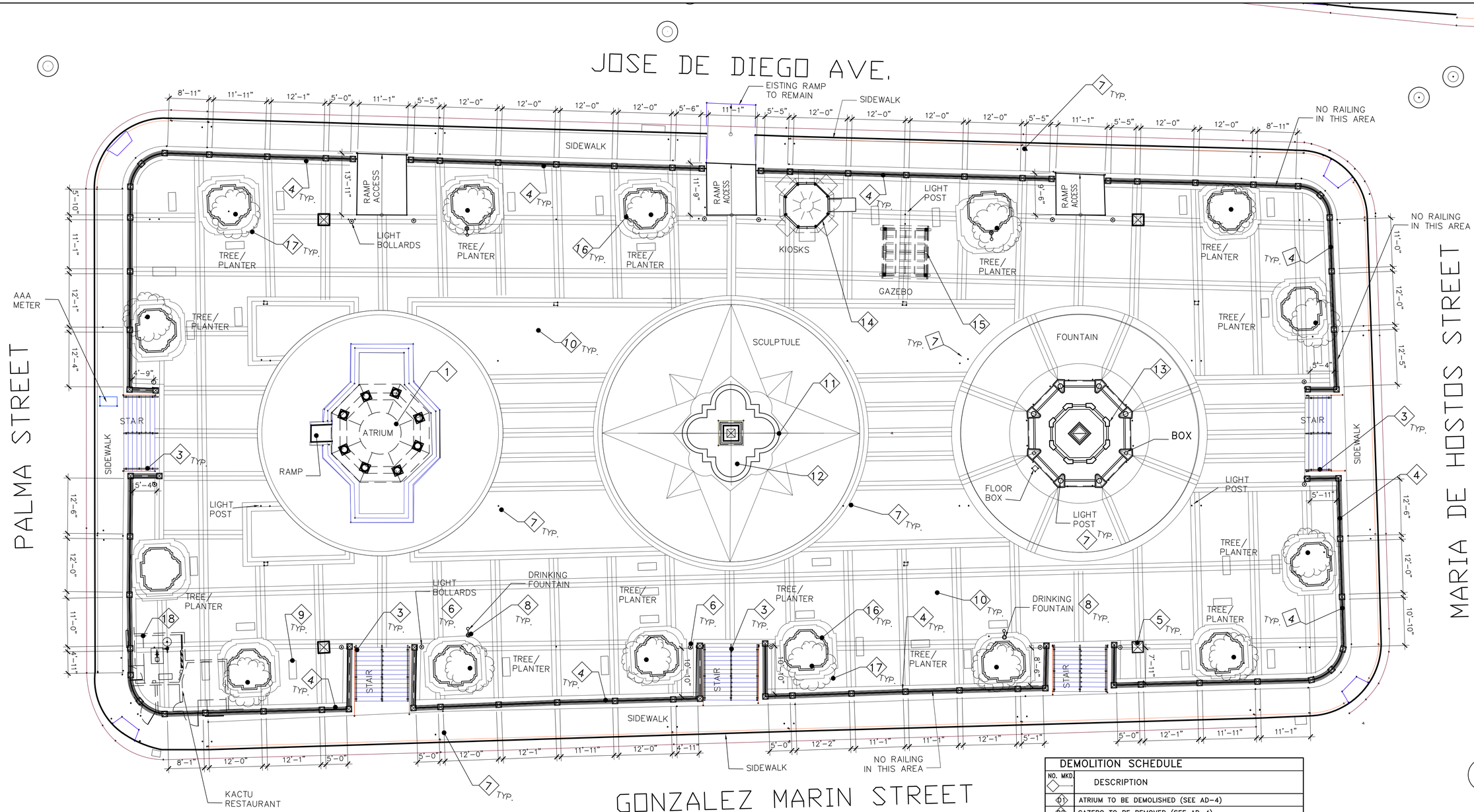

EXISTING AND DEMOLITION PLAZA FLOOR PLAN

SCALE: 3/32"=1'-0"

NORTH

DEMOLITION SCHEDULE	
NO. MKD.	DESCRIPTION
01	ATRIUM TO BE DEMOLISHED (SEE AD-4)
02	GAZEBO TO BE REMOVED (SEE AD-4)
03	STAIR RAILING TO BE REMOVED-REFER TO ASBETO & LBP STUDY (TERNICA SPECS.)
04	GRILLES RAILING AND COLUMN TO BE REMOVED (SEE NOTE 3 - APPLIES TO GRILLES IN THIS ITEM)
05	CONCRETE MONUMENT TO BE REMOVED
06	LIGHT BOLLARDS TO BE REMOVED (SEE NOTE 1)
07	LIGHT POST TO BE REMOVED (SEE NOTE 3)
08	DRINKING FOUNTAIN TO BE REMOVED
09	BENCH TO BE REMOVED (SEE NOTE 3)
10	FLOOR FIN. TO BE REMOVED (SEE NOTE 1)
11	CONCRETE LOW WALL TO REMAIN AND REVITALIZED
12	PLANTING TO REMAIN AND TO BE REVITALIZED
13	FOUNTAIN AND WALL TO BE DEMOLISHED (SEE NOTE 1)
14	KIOSKS TO BE DEMOLISHED (SEE NOTE 1)
15	GAZEBO TO BE DEMOLISHED (SEE NOTE 1)
16	PLANTER TO BE DEMOLISHED (SEE NOTE 1)
17	TREE TO REMAIN
18	ELECTRICAL AND MECH. ROOM TO REMOVE EQUIPMENT (SEE NOTE 3)

NOTE:
1- THE CONTRACTOR WILL DISPOSE OF ALL THE EQUIPMENT AND MATERIALS REMOVED.

2- FOR STRUCTURES DETAILS SEE DWG. AD-3,4.

3- THE CONTRACTOR WILL TRANSPORT AND STORE THESE MATERIALS / EQUIPMENT AT A LOCATION AS INSTRUCTED THE MUNICIPALITY.

IMPORTANT NOTE:

THE EXISTING ELEMENTS TO BE DEMOLISHED IN THE PLAZA ARE NOT CHARACTER DEFINING ELEMENTS (THE FLOOR MATERIAL AND PATTERN, THE LARGE GAZEBO, THE CONCRETE PERIPHERAL RAILING, BENCHES, THE POLES AND LUMINARIES AND THE FOUNTAIN ELEMENTS). THE CHARACTER DEFINING ELEMENTS LEFT AND INCORPORATED AS PART OF THE PROJECT ARE: THE EXISTING FICUS TREES, THE CENTRAL OBELISK SCULPTURE AND THE SURROUNDING PLANTING AREA.

DATE	REVISIONS

REVITALIZATION OF
LUIS MUÑOZ RIVERA PLAZA
IN THE URBAN CENTER
ARECIBO, PUERTO RICO

IGLESIAS•VAZQUEZ and ASSOCIATES
320 FORTALEZA STREET 2nd FLOOR SAN JUAN, PUERTO RICO 00902 TELS. 721-4545 721-4546
ENGINEERS • ARCHITECTS • PLANNERS

SHEET TITLE:
EXISTING AND DEMOLITION
PLAZA FLOOR PLAN
SCALE: AS SHOWN

CODE NO:
08-903-

DRAWING NO:
AD-1

SHEET NO:
8
OF
00

N:\Proj\ARECIBO\903 PLAZA ARECIBO\DWGS\008-903AD-1.dwg

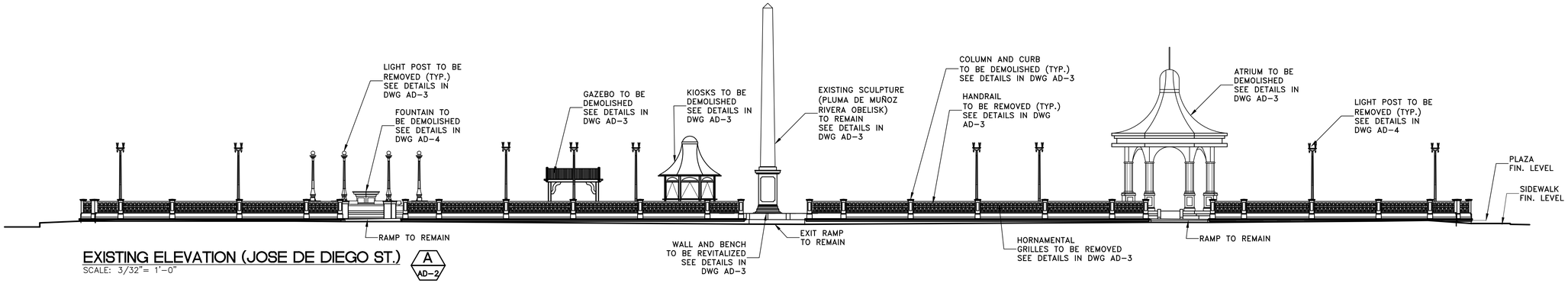

EXISTING ELEVATION (JOSE DE DIEGO ST.) A AD-2

SCALE: 3/32"= 1'-0"

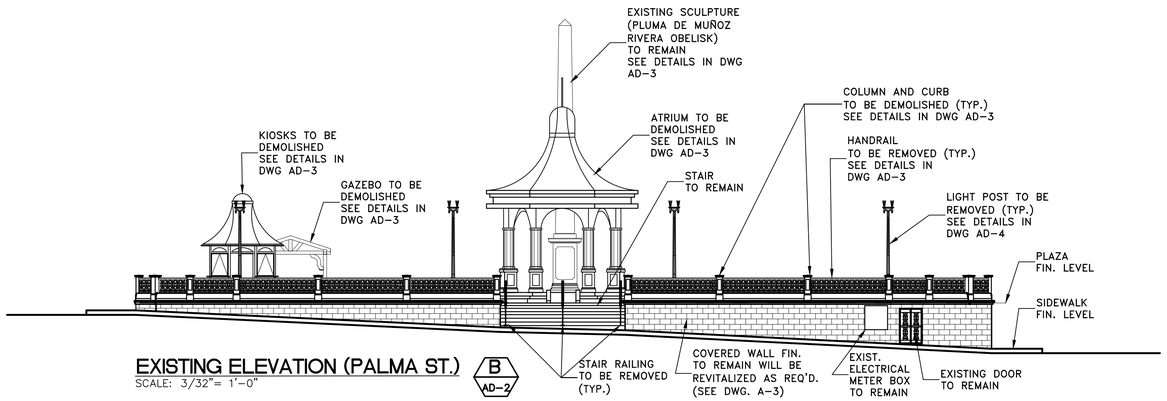

EXISTING ELEVATION (PALMA ST.) B AD-2

SCALE: 3/32"= 1'-0"

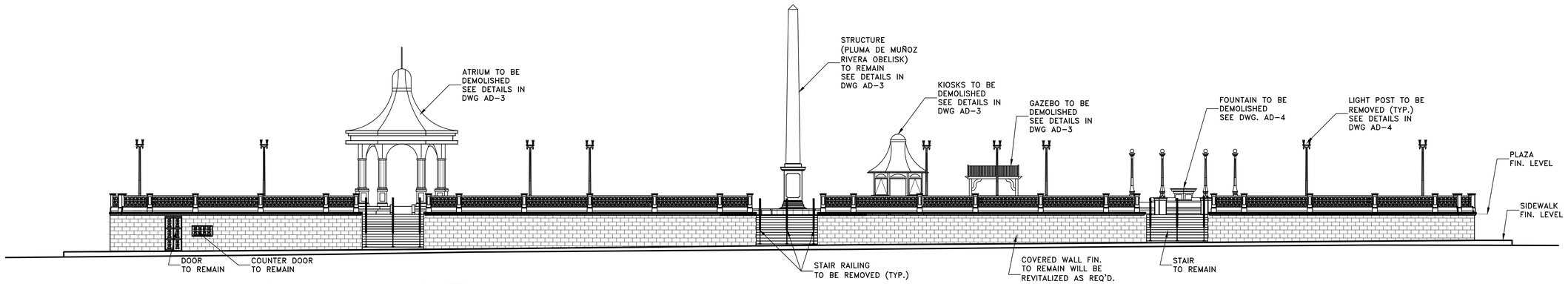

EXISTING ELEVATION (GONZALEZ MARIN ST.) C AD-2

SCALE: 3/32"= 1'-0"

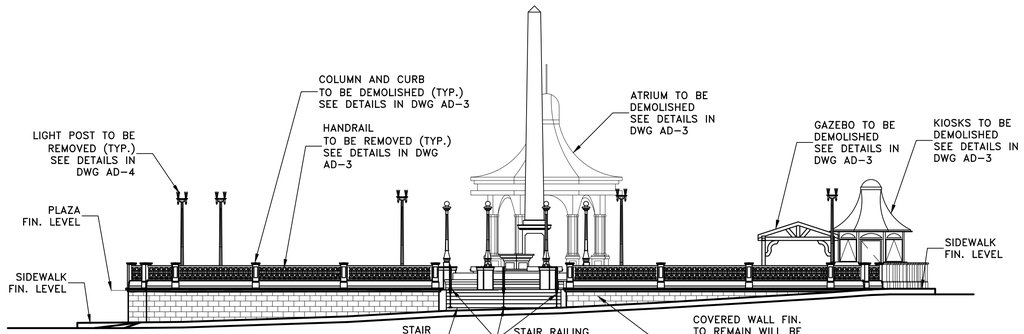

EXISTING ELEVATION (MARIA DE HOSTOS ST.) D AD-2

SCALE: 3/32"= 1'-0"

IMPORTANT NOTE:

THE EXISTING ELEMENTS TO BE DEMOLISHED IN THE PLAZA ARE NOT CHARACTER DEFINING ELEMENTS (THE FLOOR MATERIAL AND PATTERN, THE LARGE GAZEBO, THE CONCRETE PERIPHERAL RAILING, BENCHES, THE POLES AND LUMINARIES AND THE FOUNTAIN ELEMENTS). THE CHARACTER DEFINING ELEMENTS LEFT AND INCORPORATED AS PART OF THE PROJECT ARE: THE EXISTING FICUS TREES, THE CENTRAL OBELISK SCULPTURE AND THE SURROUNDING PLANTING AREA.

DATE	REVISIONS

REVITALIZATION OF
LUIS MUÑOZ RIVERA PLAZA
IN THE URBAN CENTER
ARECIBO, PUERTO RICO

IGLESIAS•VAZQUEZ and ASSOCIATES
320 FORTALEZA STREET 2nd FLOOR SAN JUAN, PUERTO RICO 00902 TELS. 721-4545 721-4546
ENGINEERS • ARCHITECTS • PLANNERS

SHEET TITLE: EXISTING ELEVATION

SCALE: AS SHOWN

CODE NO: 08-903-

DRAWING NO: AD-2

SHEET NO: 9 OF 00

N:\Proj\ARECIBO\903 PLAZA ARECIBO\DWG'S\009-010-011-903AD-2 - AD-3 - AD-4.dwg

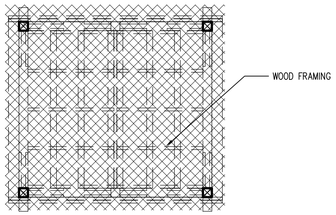

PLAN

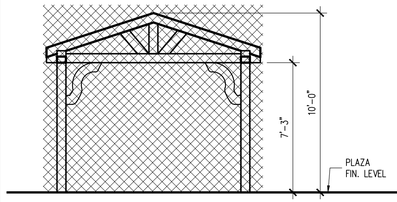

FRONT ELEVATION

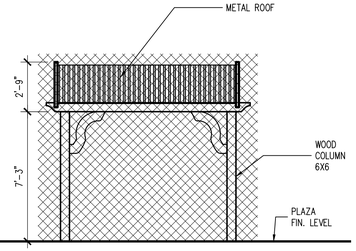

LATERAL ELEVATION

GAZEBO DETAILS
SCALE: 1/4"=1'-0"

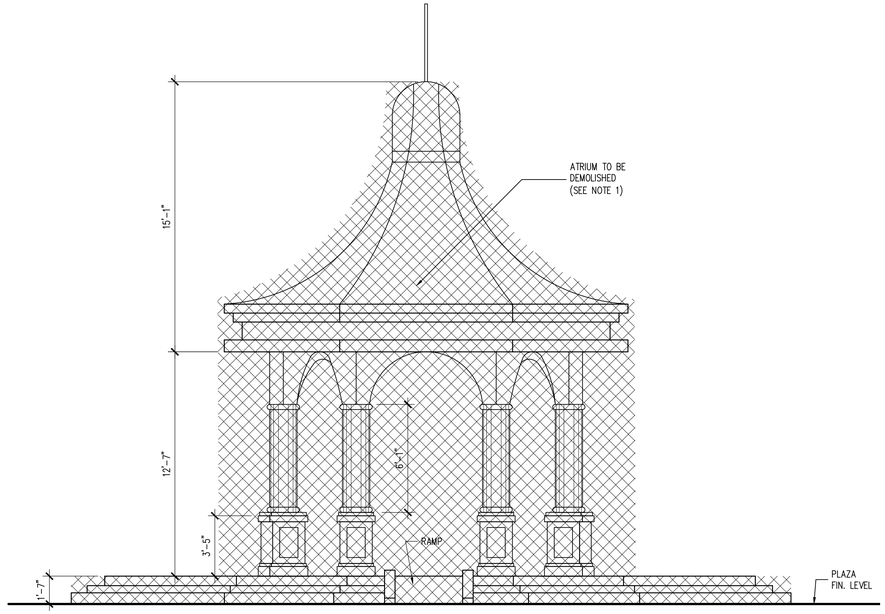

ELEVATION

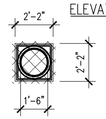

COL. PLAN

ATRIUM DETAILS
SCALE: 1/4"=1'-0"

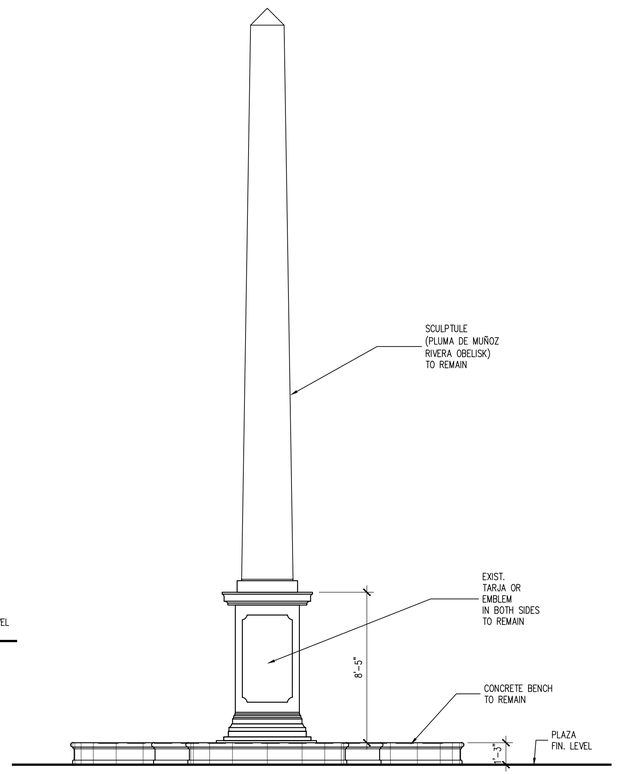

ELEVATION

PLAN — PLAZA ELEVATION — SECTION — STREET ELEVATION

NOTE:
THE EXISTING ORNAMENTAL METAL GRILLES WILL BE TRANSPORTED AND STORED AT A LOCATION AS INSTRUCTED BY THE MUNICIPALITY.

TYPICAL PLAZA PERIPHERAL RAILING DETAILS
SCALE: 1/4"=1'-0"

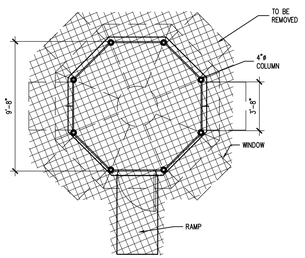

PLAN

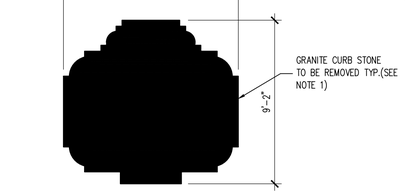

PLAN

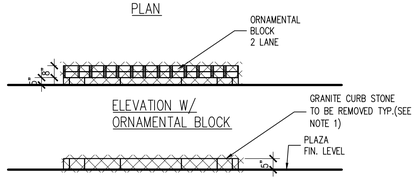

ELEVATION W/
ORNAMENTAL BLOCK

ELEVATION

TYPICAL PLANTING DETAILS
SCALE: 1/4"=1'-0"

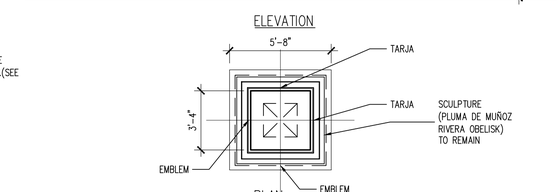

PLAN

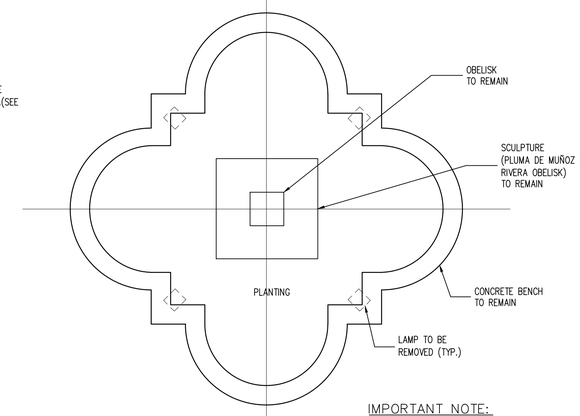

BENCH PLAN

SCULPTURE DETAILS
SCALE: 1/4"=1'-0"

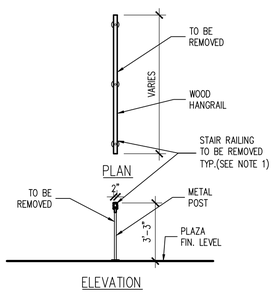

PLAN — ELEVATION

TYPICAL STAIR RAILING DETAILS
SCALE: 1/4"=1'-0"

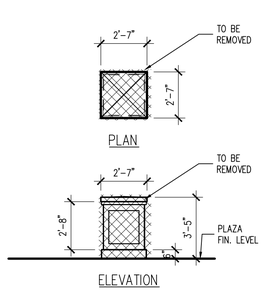

ELEVATION

TYPICAL CONCRETE BOLLARD DETAILS
SCALE: 1/4"=1'-0"

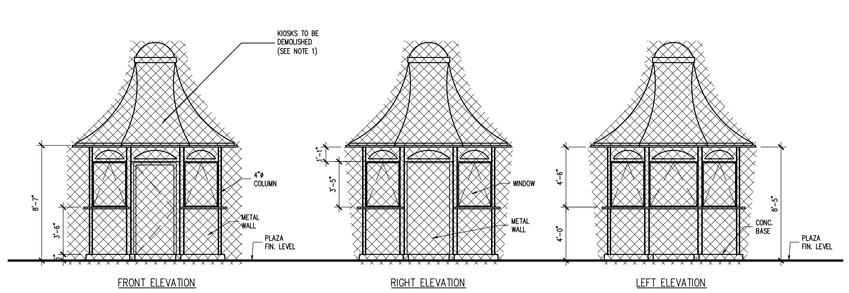

FRONT ELEVATION — RIGHT ELEVATION — LEFT ELEVATION

KIOSK DETAILS
SCALE: 3/16"=1'-0"

IMPORTANT NOTE:

THE EXISTING ELEMENTS TO BE DEMOLISHED IN THE PLAZA ARE NOT CHARACTER DEFINING ELEMENTS (THE FLOOR MATERIAL AND PATTERN, THE LARGE GAZEBO, THE CONCRETE PERIPHERAL RAILING, BENCHES, THE POLES AND LUMINARIES AND THE FOUNTAIN ELEMENTS). THE CHARACTER DEFINING ELEMENTS LEFT AND INCORPORATED AS PART OF THE PROJECT ARE: THE EXISTING FICUS TREES, THE CENTRAL OBELISK SCULPTURE AND THE SURROUNDING PLANTING AREA.

LEGEND:

EXISTING TO REMAIN

EXISTING TO BE DEMOLISHED

DATE	REVISIONS

REVITALIZATION OF
LUIS MUÑOZ RIVERA PLAZA
IN THE URBAN CENTER
ARECIBO, PUERTO RICO

IGLESIAS•VAZQUEZ and ASSOCIATES
320 FORTALEZA STREET 2nd FLOOR SAN JUAN, PUERTO RICO 00902 TELS. 721-4545 721-4546
ENGINEERS • ARCHITECTS • PLANNERS

SHEET TITLE:
EXISTING AND DEMOLITION
PLAZA MISCELLANEOUS DETAILS
SCALE: AS SHOWN

CODE NO:
08-903-

DRAWING NO:
AD-3

SHEET NO:
10
OF
00

N:\Pro\ARECIBO\903 PLAZA ARECIBO\DWG'S\009-010-011-903AD-2 - AD-3 - AD-4.dwg

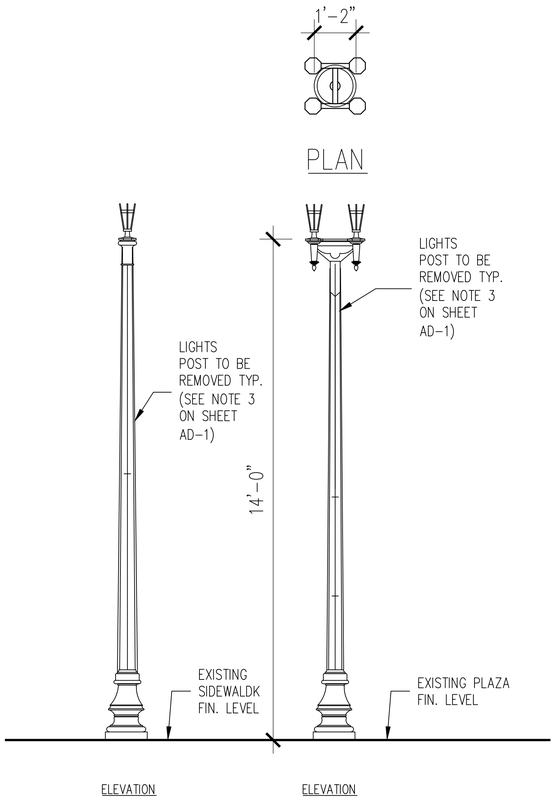

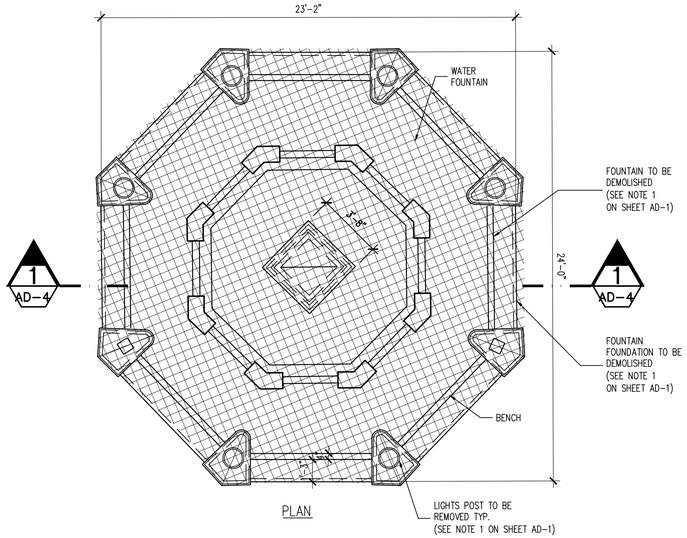

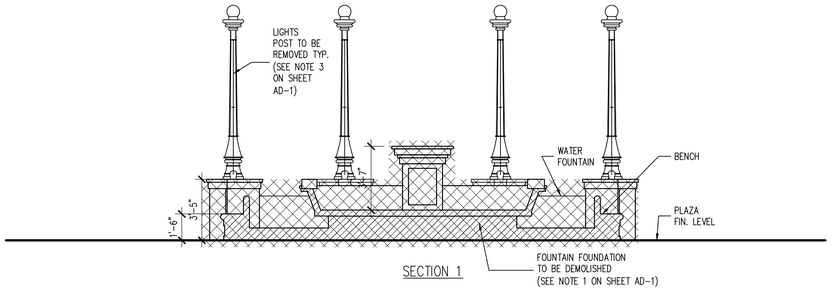

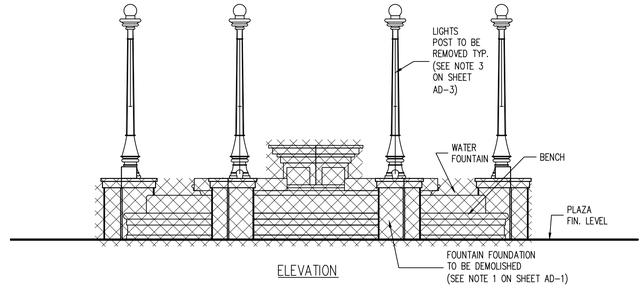

PLAZA LIGHT POLE DETAILS

SCALE: 1/2"=1'-0"

FOUNTAIN DETAILS

SCALE: 1/4"=1'-0"

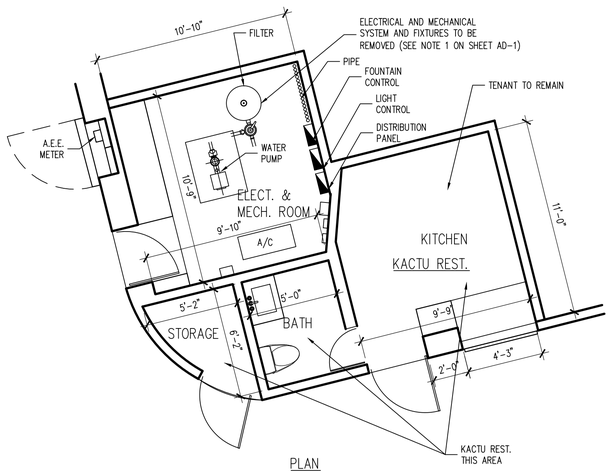

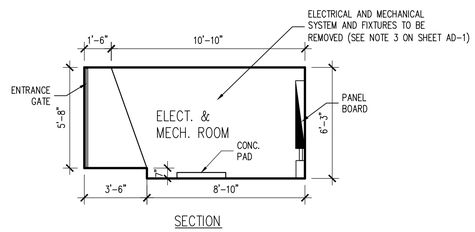

ELECTRICAL ROOM AND KITCHEN DETAILS

SCALE: 1/4"=1'-0"

IMPORTANT NOTE:

THE EXISTING ELEMENTS TO BE DEMOLISHED IN THE PLAZA ARE NOT CHARACTER DEFINING ELEMENTS (THE FLOOR MATERIAL AND PATTERN, THE LARGE GAZEBO, THE CONCRETE PERIPHERAL RAILING, BENCHES, THE POLES AND LUMINARIES AND THE FOUNTAIN ELEMENTS). THE CHARACTER DEFINING ELEMENTS LEFT AND INCORPORATED AS PART OF THE PROJECT ARE: THE EXISTING FICUS TREES, THE CENTRAL OBELISK SCULPTURE AND THE SURROUNDING PLANTING AREA.

DATE	REVISIONS

REVITALIZATION OF
LUIS MUÑOZ RIVERA PLAZA
IN THE URBAN CENTER
ARECIBO, PUERTO RICO

IGLESIAS • VAZQUEZ and ASSOCIATES
ENGINEERS • ARCHITECTS • PLANNERS
320 FORTALEZA STREET 2nd FLOOR SAN JUAN, PUERTO RICO 00902 TELS. 721-4545 721-4546

SHEET TITLE: EXISTING AND DEMOLITION PLAZA MISCELLANEOUS DETAILS
SCALE: AS SHOWN

CODE NO: 08-903-

DRAWING NO: AD-4

SHEET NO: 11 OF 00

N:\Proj\ARECIBO\903 PLAZA ARECIBO\DWG'S\009-010-011-903AD-2 - AD-3 - AD-4.dwg

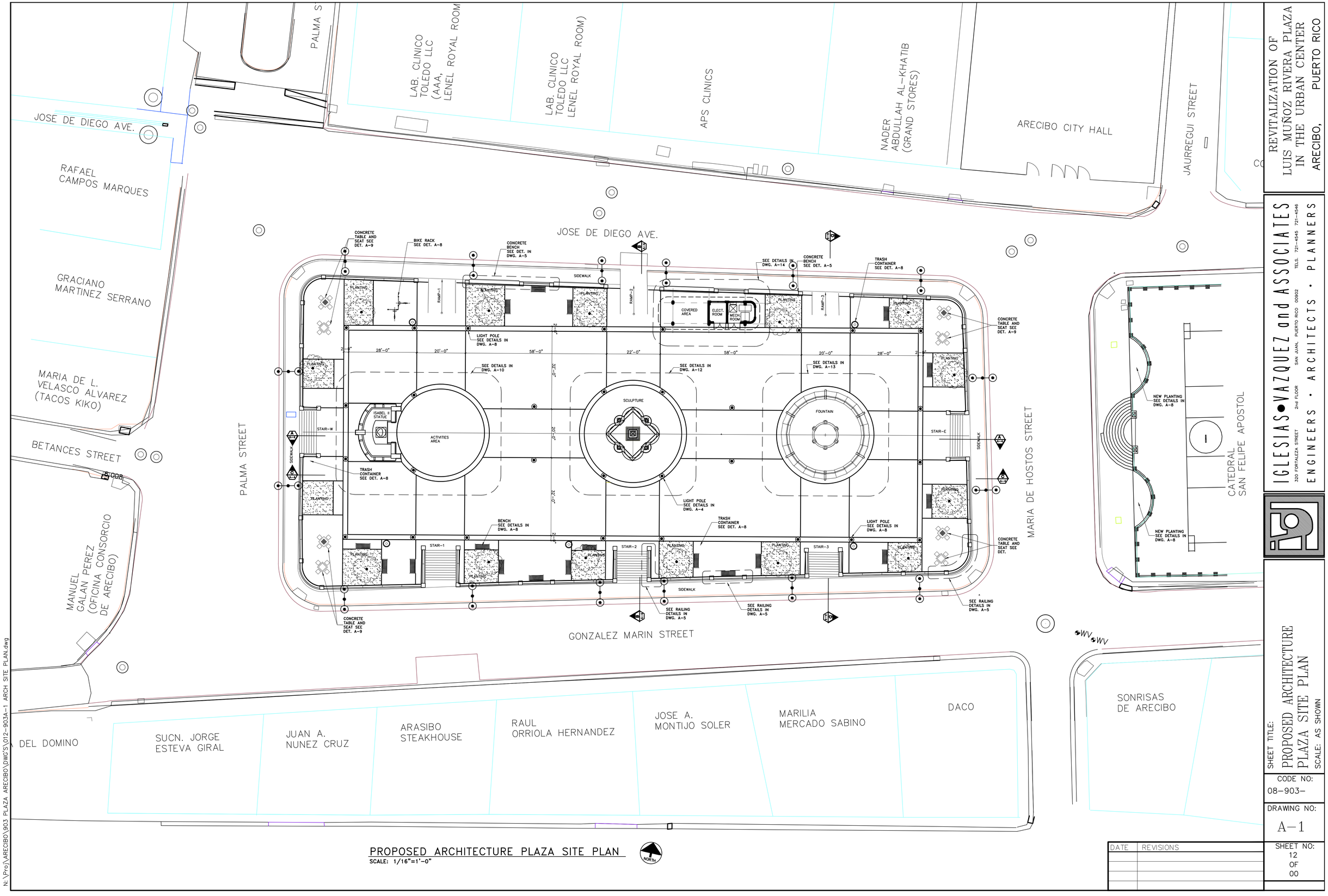

PROPOSED ARCHITECTURE PLAZA SITE PLAN

SCALE: 1/16"=1'-0"

NORTH

N:\Proj\ARECIBO\903 PLAZA ARECIBO\DWG'S\012-903A-1 ARCH SITE PLAN.dwg

REVITALIZATION OF
LUIS MUÑOZ RIVERA PLAZA
IN THE URBAN CENTER
ARECIBO, PUERTO RICO

IGLESIAS•VAZQUEZ and ASSOCIATES
ENGINEERS • ARCHITECTS • PLANNERS
320 FORTALEZA STREET 2nd FLOOR SAN JUAN, PUERTO RICO 00902 TELS. 721-4545 721-4546

SHEET TITLE: PROPOSED ARCHITECTURE PLAZA SITE PLAN
SCALE: AS SHOWN

CODE NO: 08-903-

DRAWING NO: A-1

DATE	REVISIONS

SHEET NO: 12 OF 00

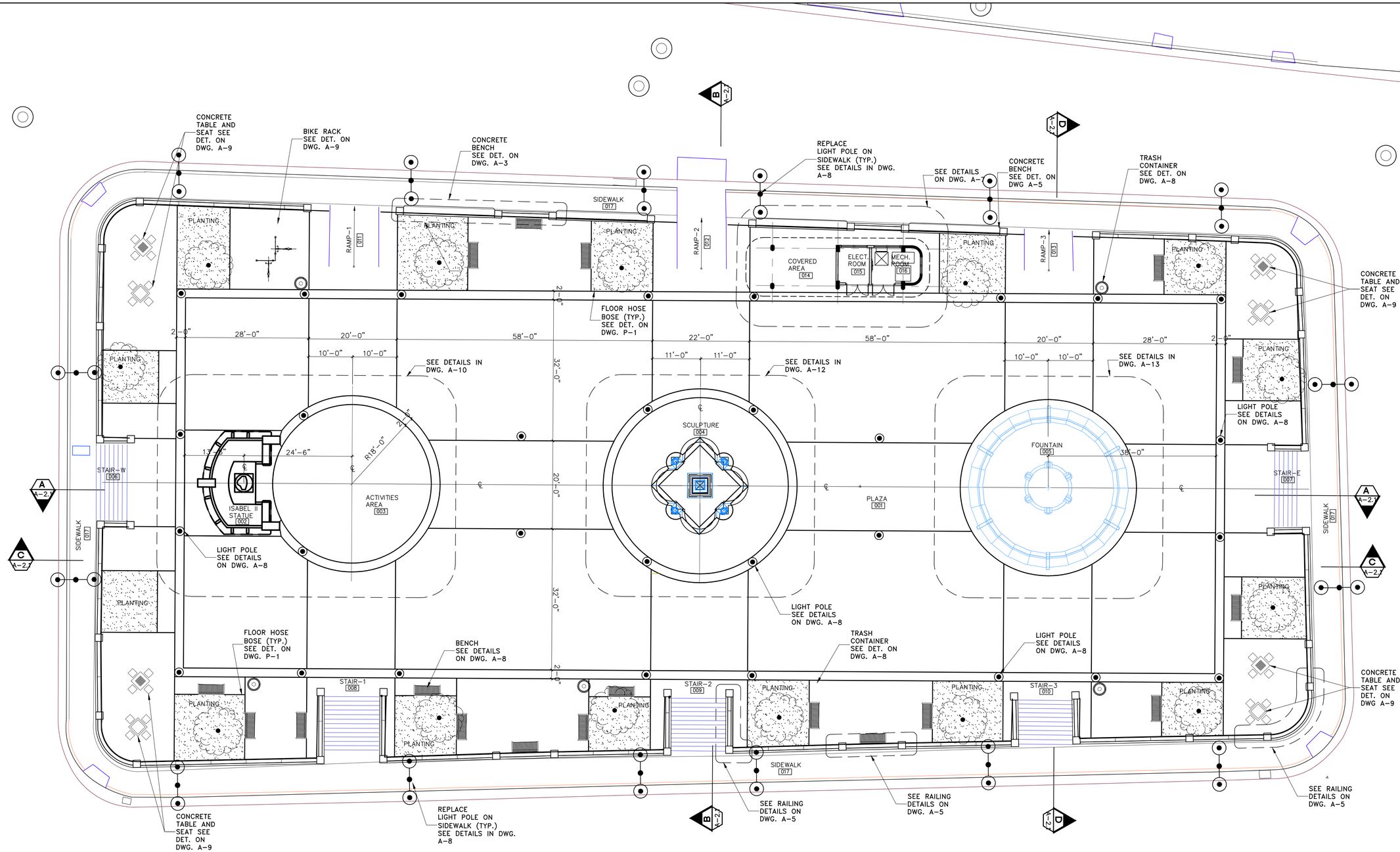

PROPOSED PLAZA FLOOR PLAN

SCALE: 3/32"=1'-0"

REVITALIZATION OF
LUIS MUÑOZ RIVERA PLAZA
IN THE URBAN CENTER
ARECIBO, PUERTO RICO

IGLESIAS•VAZQUEZ and ASSOCIATES
320 FORTALEZA STREET 2nd FLOOR SAN JUAN, PUERTO RICO 00902 TELS. 721-4545 721-4546
ENGINEERS • ARCHITECTS • PLANNERS

SHEET TITLE: PROPOSED PLAZA FLOOR PLAN

SCALE: AS SHOWN

CODE NO: 08-903-

DRAWING NO: A-2

DATE	REVISIONS

SHEET NO: 13 OF 00

N:\Proj\ARECIBO\903 PLAZA ARECIBO\DWG'S\013-903A-2.dwg

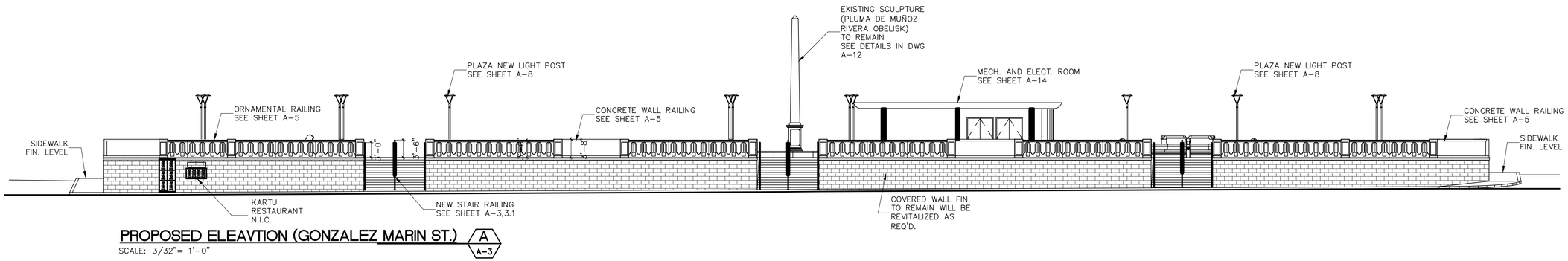

PROPOSED ELEAVTION (GONZALEZ MARIN ST.) A / A-3

SCALE: 3/32"= 1'-0"

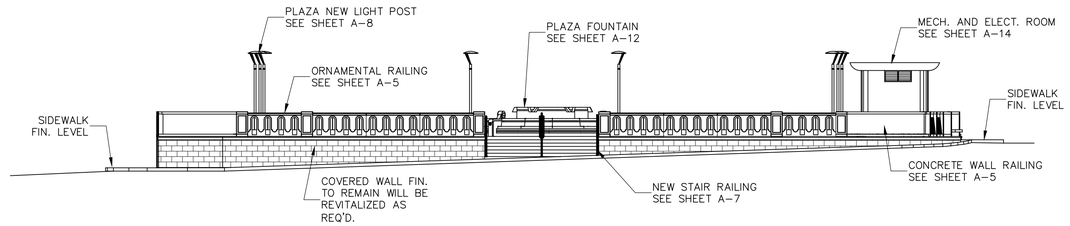

PROPOSED ELEAVTION (MARIA DE HOSTOS ST.) B / A-3

SCALE: 3/32"= 1'-0"

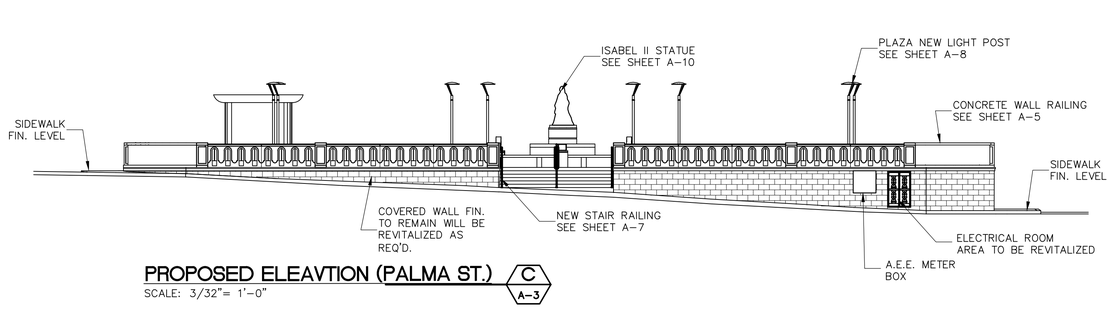

PROPOSED ELEAVTION (PALMA ST.) C / A-3

SCALE: 3/32"= 1'-0"

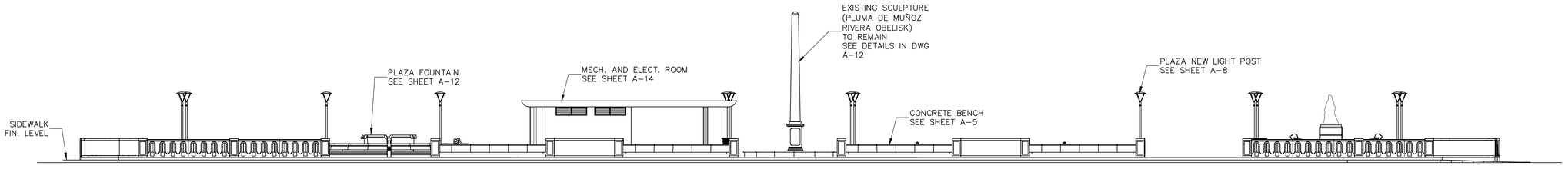

PROPOSED ELEAVTION (JOSE DE DIEGO ST.) D / A-3

SCALE: 3/32"= 1'-0"

REVITALIZATION OF
LUIS MUÑOZ RIVERA PLAZA
IN THE URBAN CENTER
ARECIBO, PUERTO RICO

IGLESIAS • VAZQUEZ and ASSOCIATES
320 FORTALEZA STREET 2nd FLOOR SAN JUAN, PUERTO RICO 00902 TELS. 721-4545 721-4546
ENGINEERS • ARCHITECTS • PLANNERS

SHEET TITLE: PROPOSED PLAZA ELEVATIONS

SCALE: AS SHOWN

CODE NO: 08-903-

DRAWING NO: A-3

DATE	REVISIONS

SHEET NO: 14 OF 00

N:\Proj\ARECIBO\903 PLAZA ARECIBO\DWG'S\014-015-903A-3-A-4.dwg

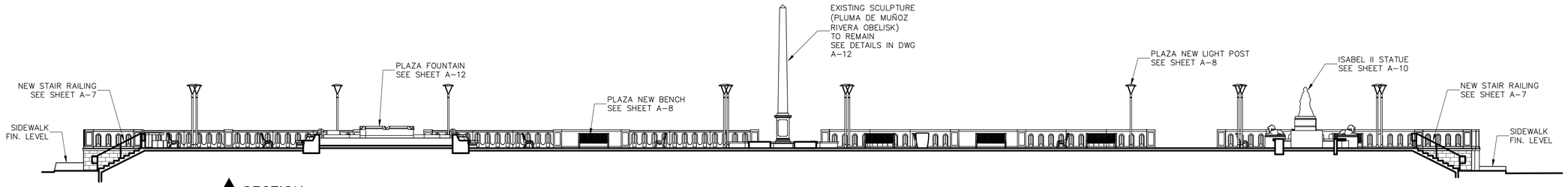

A SECTION
A-2 SCALE: 3/32" = 1'-0"

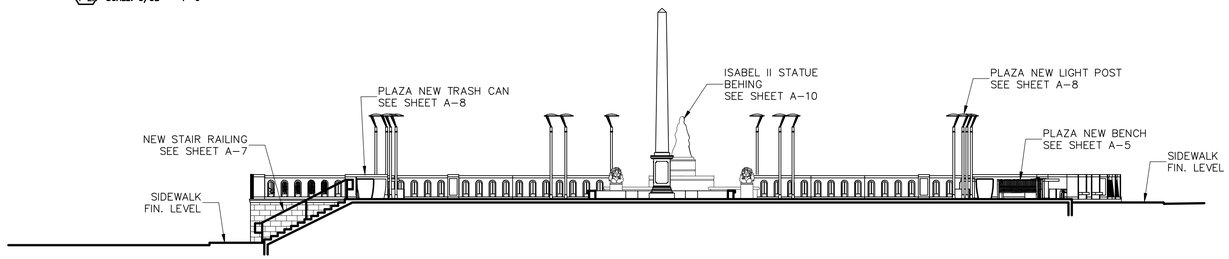

B SECTION
A-2 SCALE: 3/32" = 1'-0"

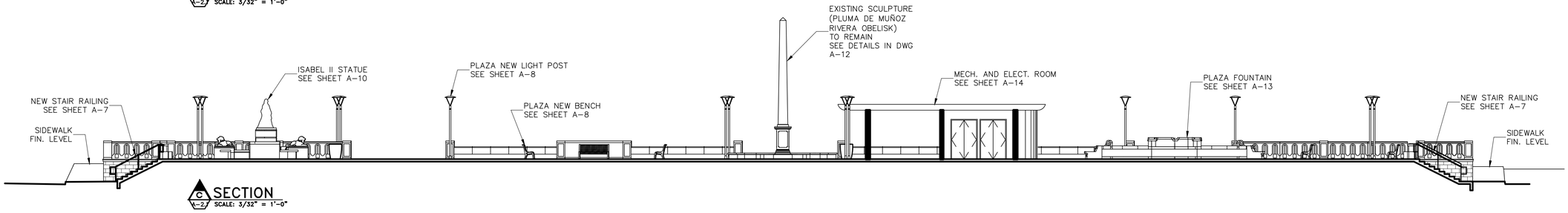

C SECTION
A-2 SCALE: 3/32" = 1'-0"

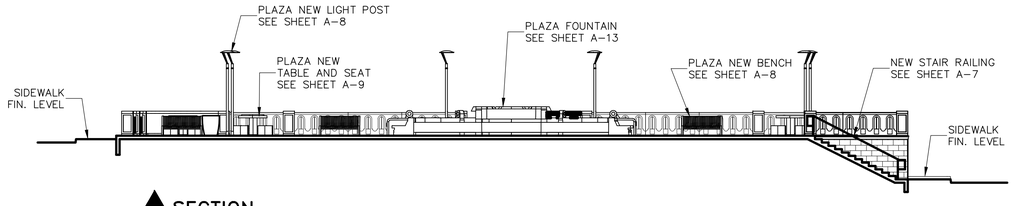

D SECTION
A-2 SCALE: 3/32" = 1'-0"

REVITALIZATION OF
LUIS MUÑOZ RIVERA PLAZA
IN THE URBAN CENTER
ARECIBO, PUERTO RICO

IGLESIAS•VAZQUEZ and ASSOCIATES
ENGINEERS • ARCHITECTS • PLANNERS
320 FORTALEZA STREET 2nd FLOOR SAN JUAN, PUERTO RICO 00902 TELS. 721-4545 721-4546

SHEET TITLE:
PROPOSED PLAZA SECTIONS

SCALE: AS SHOWN

CODE NO:
08-903-

DRAWING NO:
A-4

DATE	REVISIONS

SHEET NO:
15
OF
00

N:\Proj\ARECIBO\903 PLAZA ARECIBO\DWG'S\014-015-903A-3-A-4.dwg

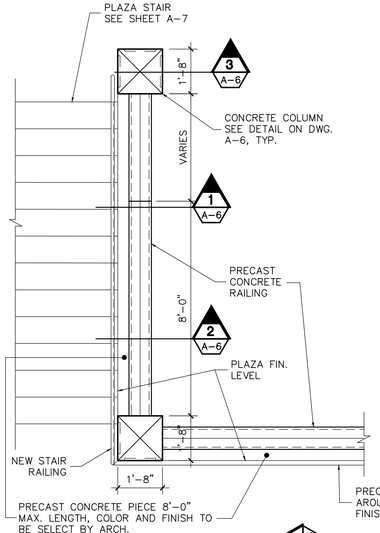

RAILING TYP. AT STAIR AREA
SCALE: 3/8" = 1'-0"

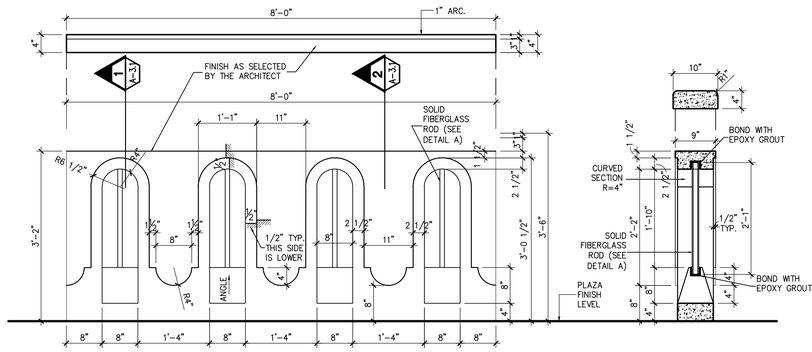

TYPICAL PERIMETER PLAZA RAILING
SCALE: 3/4" = 1'-0"

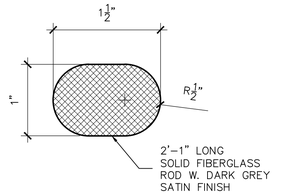

ROD DETAIL "A"
SCALE: FULL

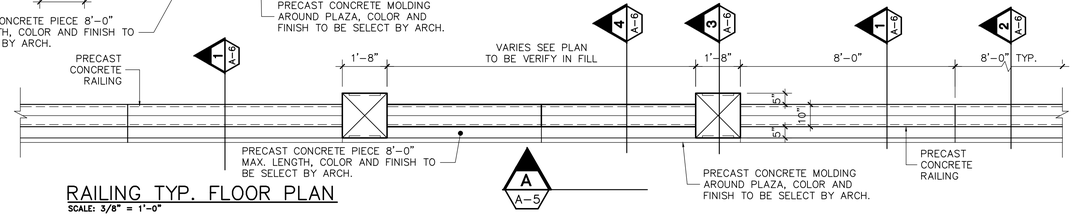

RAILING TYP. FLOOR PLAN
SCALE: 3/8" = 1'-0"

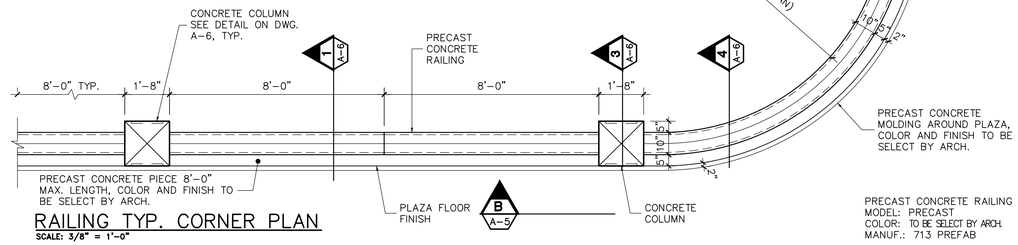

RAILING TYP. CORNER PLAN
SCALE: 3/8" = 1'-0"

PRECAST CONCRETE RAILING
MODEL: PRECAST
COLOR: TO BE SELECT BY ARCH.
MANUF.: 713 PREFAB

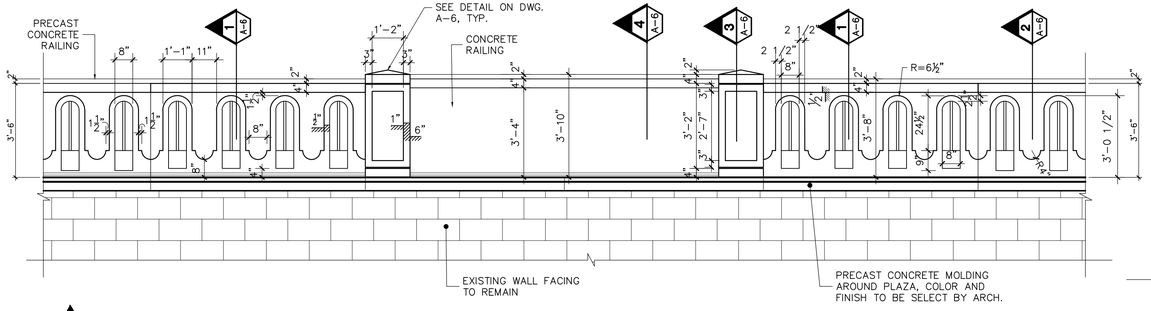

A SECTION
A-5 SCALE: 3/8" = 1'-0"

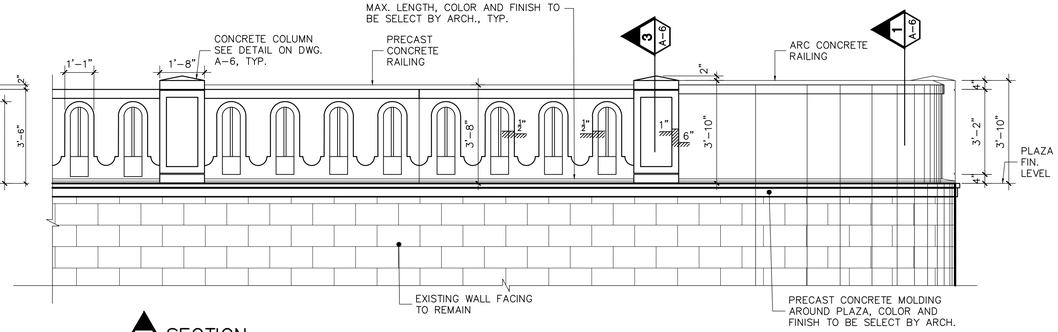

B SECTION
A-5 SCALE: 3/8" = 1'-0"

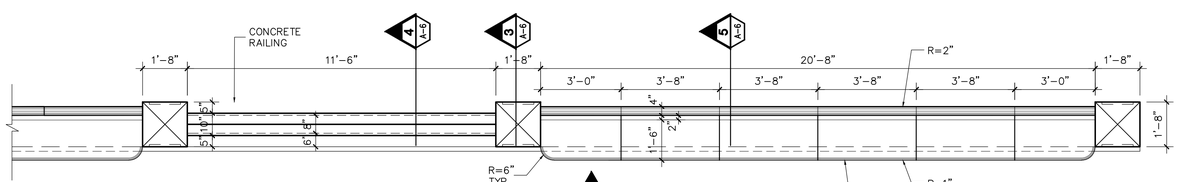

RAILING AND BENCH TYP. FLOOR PLAN
SCALE: 3/8" = 1'-0"

PRECAST CONCRETE BENCH
MODEL: PRECAST
COLOR AND FINISH: TO BE SELECT BY
ARCH. (SAME THAT FOUTAIN FINISH)
MANUF.: 713 PREFAB

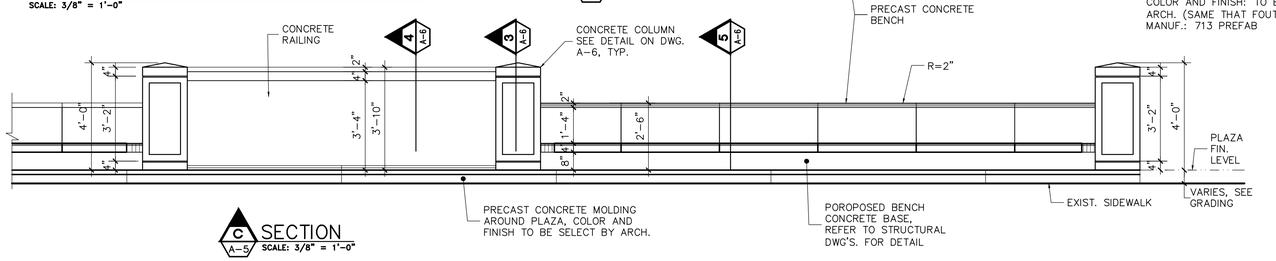

C SECTION
C A-5 SCALE: 3/8" = 1'-0"

REVITALIZATION OF
LUIS MUÑOZ RIVERA PLAZA
IN THE URBAN CENTER
ARECIBO, PUERTO RICO

IGLESIAS • VAZQUEZ and ASSOCIATES
ENGINEERS • ARCHITECTS • PLANNERS
320 FORTALEZA STREET 2nd FLOOR SAN JUAN, PUERTO RICO 00902 TELS. 721-4545 721-4546

SHEET TITLE:
PROPOSED PLAZA
RAILING PLAN AND SETIONS
SCALE: AS SHOWN

CODE NO:
08-903-

DRAWING NO:
A-5

DATE	REVISIONS

SHEET NO:
16
OF
00

N:\Pro\ARECIBO\903 PLAZA ARECIBO\DWG'S\016-017-903A-5-A-6.dwg

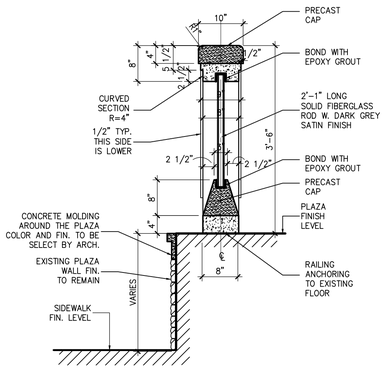

1 A-3 RAILING WALL SECTION
SCALE: 3/4" = 1'-0"

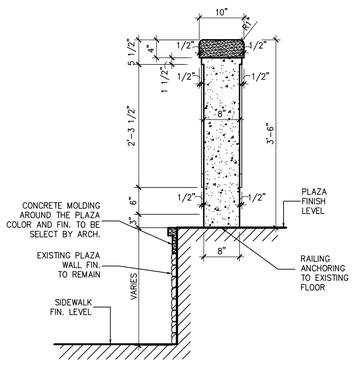

2 A-3 RAILING WALL SECTION
SCALE: 3/4" = 1'-0"

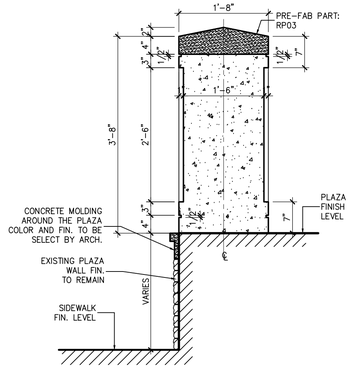

3 A-3 RAILING WALL SECTION
SCALE: 3/4" = 1'-0"

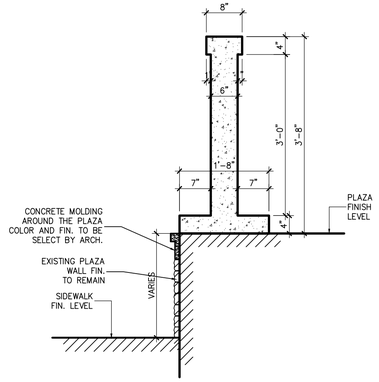

4 A-3 RAILING WALL SECTION
SCALE: 3/4" = 1'-0"

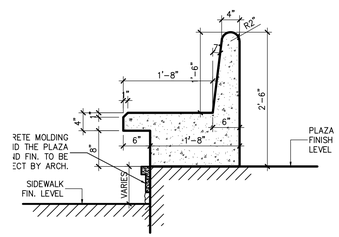

5 A-3 BENCH WALL SECTION
SCALE: 3/4" = 1'-0"

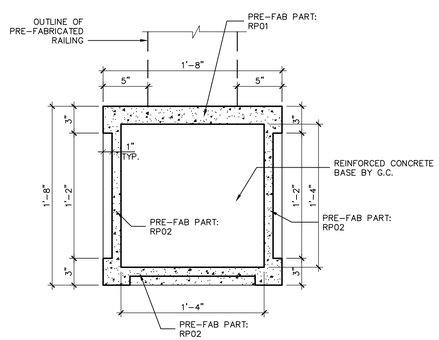

PLAN VIEW: END CONDITION
SCALE: 1 1/2" = 1'-0"

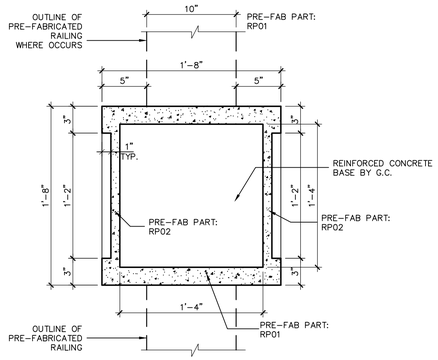

PLAN VIEW: CENTRAL CONDITION
SCALE: 1 1/2" = 1'-0"

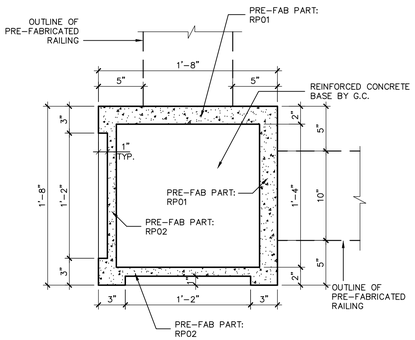

PLAN VIEW: CORNER CONDITION
SCALE: 1 1/2" = 1'-0"

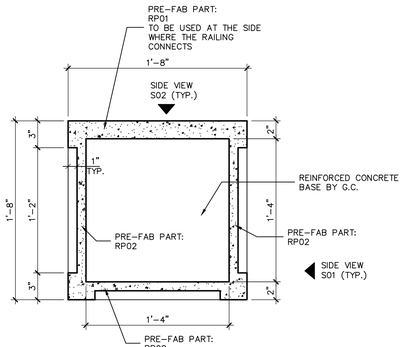

PLAN VIEW

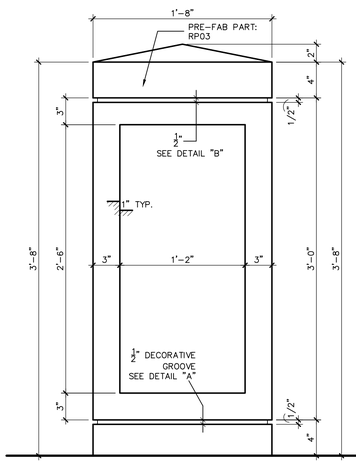

SIDE VIEW S01

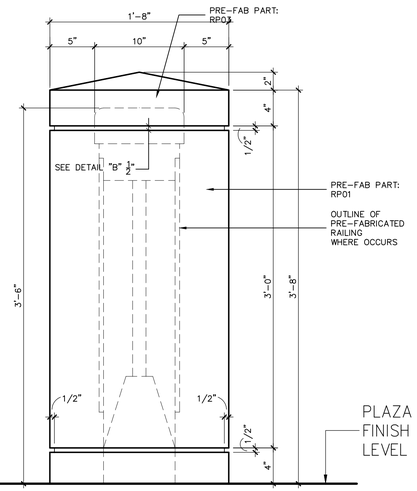

SIDE VIEW S02

PRE-FABRICATED CONCRETE RAILING CENTER MODULE DETAILS
SCALE: 1 1/2" = 1'-0"

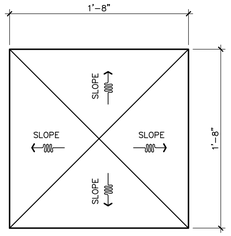

TOP VIEW

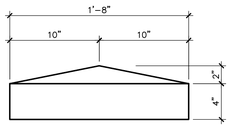

SIDE VIEW

PRE-FABRICATED PART RP03
SCALE: 1 1/2" = 1'-0"

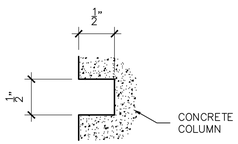

DETAIL "A"
SCALE: FULL

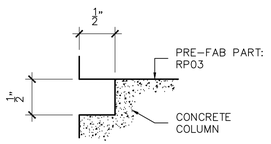

DETAIL "B"
SCALE: FULL

REVITALIZATION OF
LUIS MUÑOZ RIVERA PLAZA
IN THE URBAN CENTER
ARECIBO, PUERTO RICO

IGLESIAS•VAZQUEZ and ASSOCIATES
320 FORTALEZA STREET 2nd FLOOR SAN JUAN, PUERTO RICO 00902 TELS. 721-4545 721-4546
ENGINEERS • ARCHITECTS • PLANNERS

SHEET TITLE:
PROPOSED PLAZA
RAILING WALL SECTION
SCALE: AS SHOWN

CODE NO:
08-903-

DRAWING NO:
A-6

DATE	REVISIONS

SHEET NO:
17
OF
00

N:\Proj\ARECIBO\903 PLAZA ARECIBO\DWG'S\016-017-903A-5-A-6.dwg

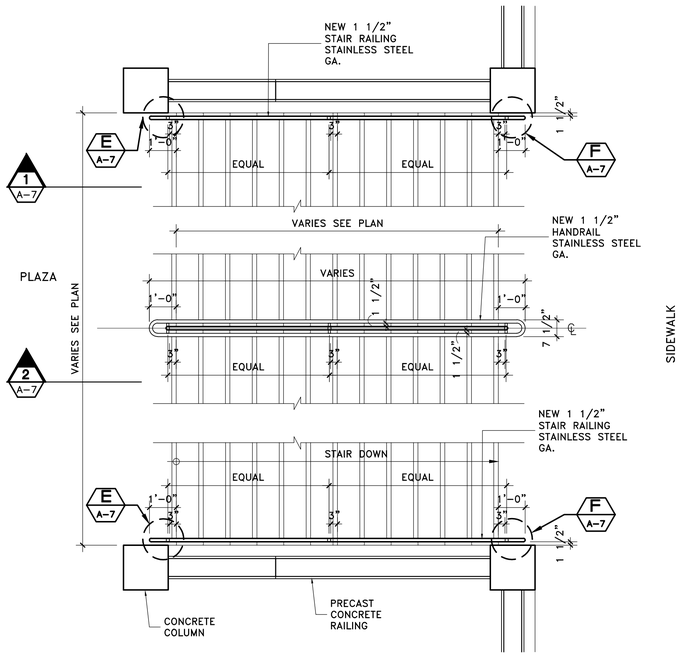

PROPOSED EXISTING TYP. STAIR BLOW UP
SCALE: 3/8" = 1'-0"

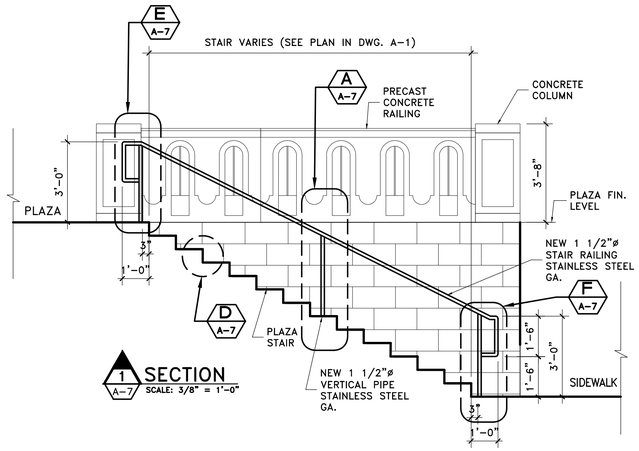

SECTION
SCALE: 3/8" = 1'-0"

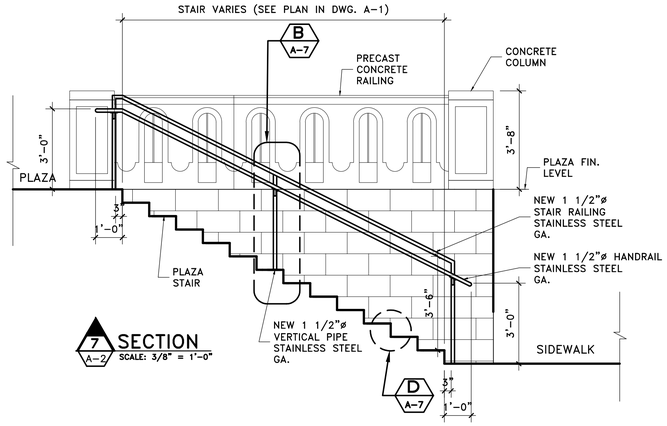

SECTION
SCALE: 3/8" = 1'-0"

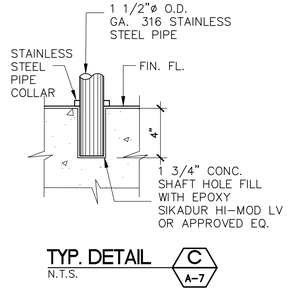

TYP. DETAIL
N.T.S.

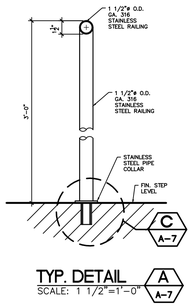

TYP. DETAIL
SCALE: 1 1/2"=1'-0"

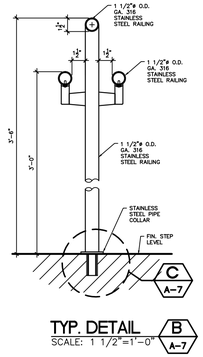

TYP. DETAIL
SCALE: 1 1/2"=1'-0"

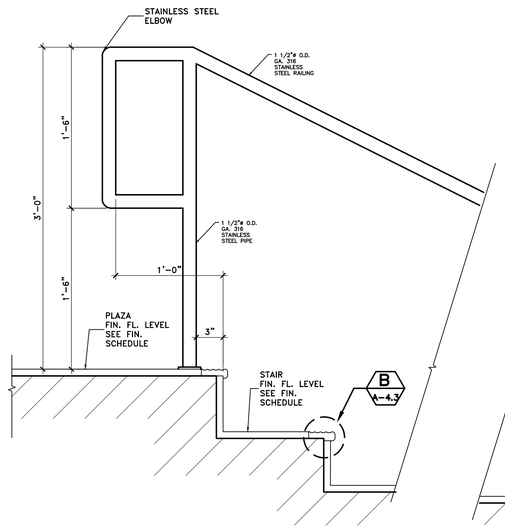

TYP. TOP HANDRAIL EXTENSION DETAIL
SCALE: 1 1/2"=1'-0"

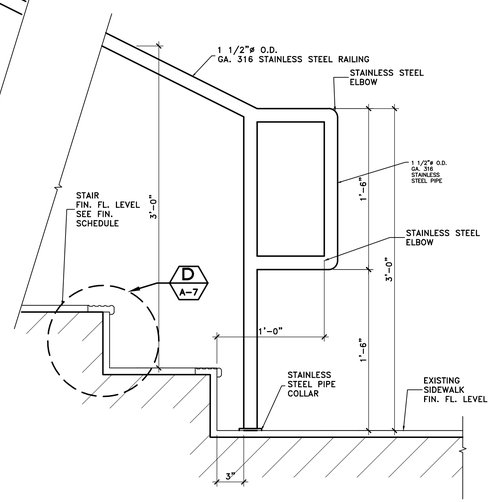

TYP. BOTTOM HANDRAIL EXTENSION DETAIL
SCALE: 1 1/2"=1'-0"

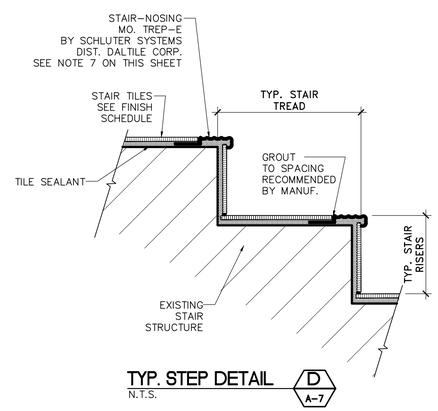

TYP. STEP DETAIL
N.T.S.

IGLESIAS•VAZQUEZ and ASSOCIATES
ENGINEERS • ARCHITECTS • PLANNERS
320 FORTALEZA STREET 2nd FLOOR SAN JUAN, PUERTO RICO 00902 TELS. 721-4545 721-4546

REVITALIZATION OF
LUIS MUÑOZ RIVERA PLAZA
IN THE URBAN CENTER
ARECIBO, PUERTO RICO

SHEET TITLE:
PROPOSED TYP. EXISTING STAIR BLOW UP AND RAILING DETAILS
SCALE: AS SHOWN

CODE NO:
08-903-

DRAWING NO:
A-7

DATE	REVISIONS

SHEET NO:
18
OF
00

N:\Proj\ARECIBO\903 PLAZA ARECIBO\DWG'S\018-903A-7 STAIR DETAILS.dwg

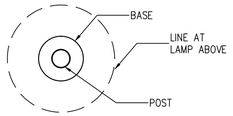

TOP VIEW

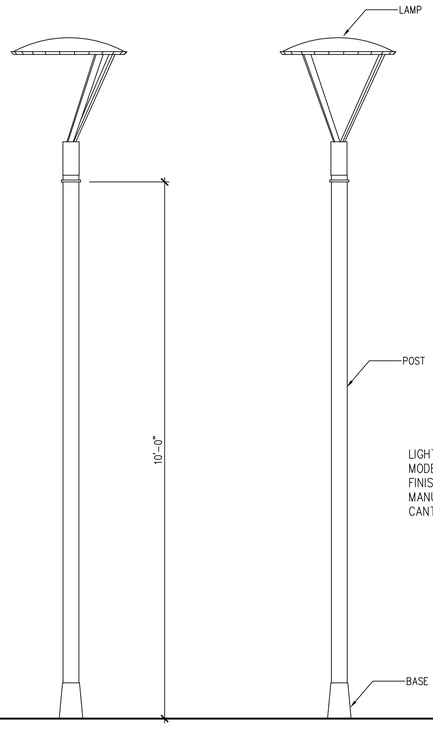

LIGHT POST
MODEL:
FINISH:
MANUF.:
CANT.:

FRONT VIEW LATERAL VIEW

PLAZA LIGHT POLE DETAILS
SCALE: 3/4"=1'-0"

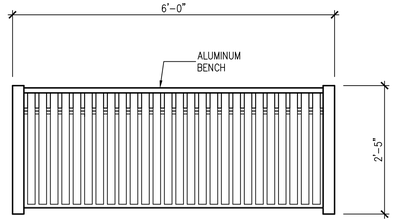

PLAN

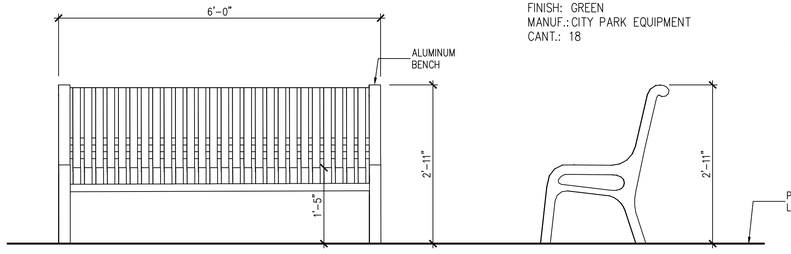

BENCH
MODEL: TOWNE SQUARE BENCH
FINISH: GREEN
MANUF.: CITY PARK EQUIPMENT
CANT.: 18

FRONT VIEW LATERAL VIEW

PLAZA BENCH DETAILS
SCALE: 3/4"=1'-0"

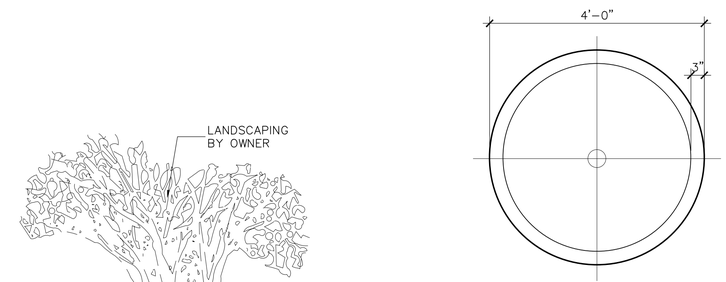

SIDE VIEW

TOP VIEW

PLANTER
MODEL: PL-9
FINISH: BY ARCHITECT
MANUF.: 713 PRECAST, LLC
CANT.: 2

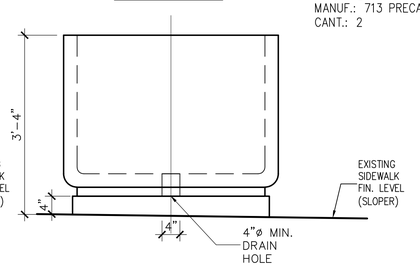

FRONT VIEW

PLANTING DETAILS ON (CATEDRAL SAN FELIPE APOSTOL)
SCALE: 3/4"=1'-0"

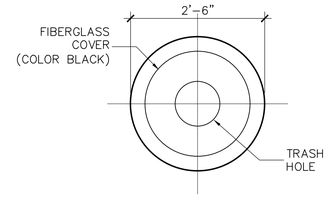

TOP VIEW

TRASH CAN
MODEL: TR-9
FINISH: BY ARCHITECT
MANUF.: 713 PRECAST, LLC
CANT.: 12

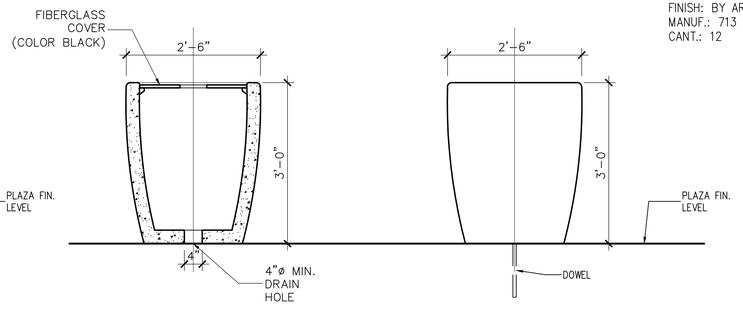

SIDE VIEW FRONT VIEW

PLAZA TRASH CAN DETAILS
SCALE: 3/4"=1'-0"

REVITALIZATION OF
LUIS MUÑOZ RIVERA PLAZA
IN THE URBAN CENTER
ARECIBO, PUERTO RICO

IGLESIAS•VAZQUEZ and ASSOCIATES
ENGINEERS • ARCHITECTS • PLANNERS
320 FORTALEZA STREET 2nd FLOOR SAN JUAN, PUERTO RICO 00902 TELS. 721-4545 721-4546

SHEET TITLE:
PROPOSED PLAZA MISCELLANEOUS DETAILS
SCALE: AS SHOWN

CODE NO:
08-903-

DRAWING NO:
A-8

DATE	REVISIONS

SHEET NO:
19
OF
00

N:\Proj\ARECIBO\903 PLAZA ARECIBO\DWG'S\019-020-903A-8-A-9.dwg

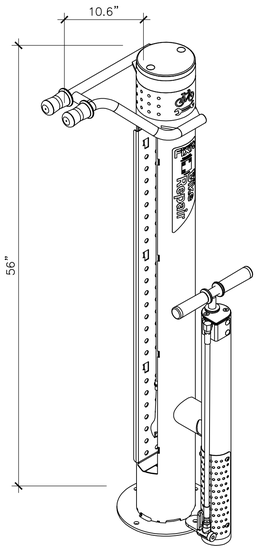

FRONT VIEW

FIXIT PLUS WITH AIR PRIME
MODEL: 509-2001 W/AIR PRIME
FINISH: GALVANISE
MANUF.: THEPARK
CANT.: 1

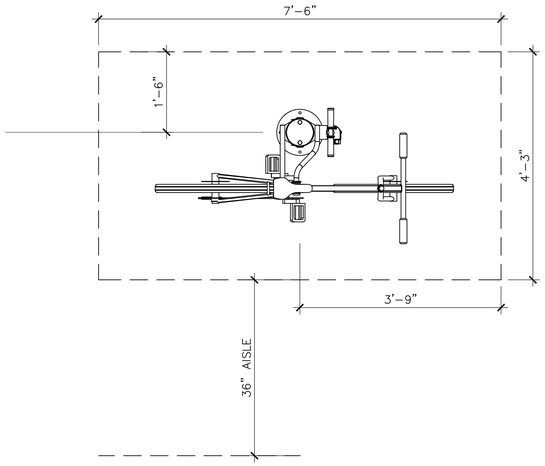

TOP VIEW

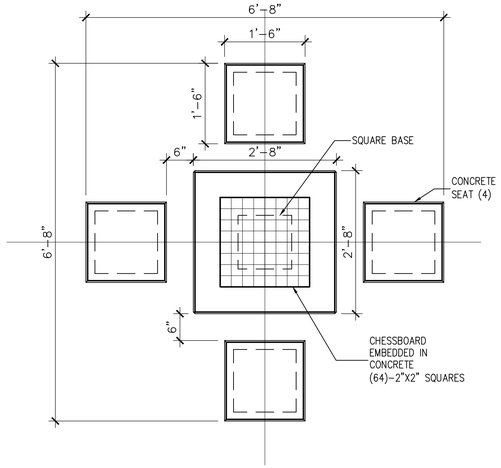

TOP VIEW

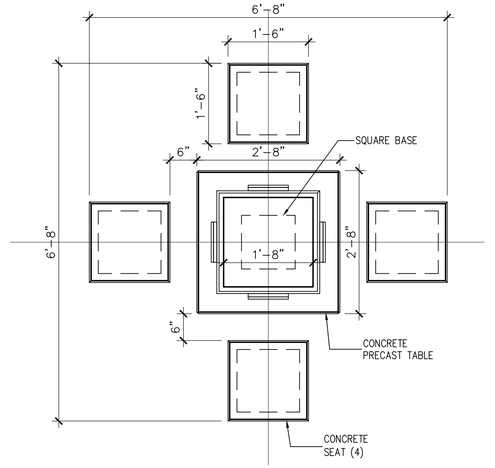

TOP VIEW

PLAZA FIXIT PLUS WITH AIR PRIME DETAILS
SCALE: 1/2"=1'-0"

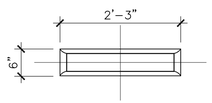

TOP VIEW

BIKE RACK
MODEL: BR-1
FINISH: NATURAL CONCRETE
MANUF.: 713 PRECAST, LLC
CANT.: 2

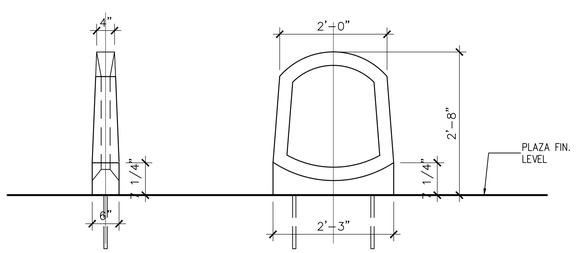

SIDE VIEW FRONT VIEW

PLAZA BIKE RACK DETAILS
SCALE: 1/2"=1'-0"

PRECAST TABLE AND SEAT
MODEL: TL-1 CUSTOM (CHESSBOARD EMBEDDED)
FINISH: BY ARCHITECT
MANUF.: 713 PRECAST, LLC
CANT.: 4

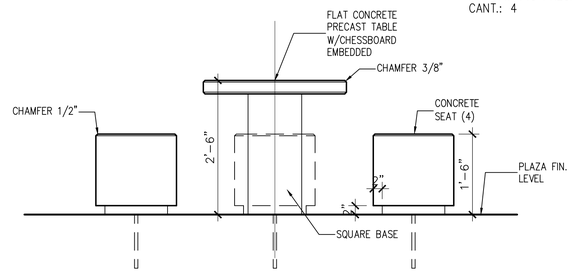

FRONT VIEW

PLAZA CHESS TABLE AND SEAT DETAILS
SCALE: 1/2"=1'-0"

PRECAST TABLE AND SEAT
MODEL: TE-6 (CAPICU)
FINISH: BY ARCHITECT
MANUF.: 713 PRECAST, LLC
CANT.: 4

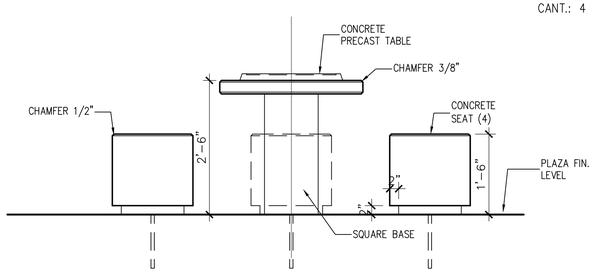

FRONT VIEW

PLAZA DOMINO TABLE AND SEAT DETAILS
SCALE: 1/2"=1'-0"

REVITALIZATION OF
LUIS MUÑOZ RIVERA PLAZA
IN THE URBAN CENTER
ARECIBO, PUERTO RICO

IGLESIAS•VAZQUEZ and ASSOCIATES
ENGINEERS • ARCHITECTS • PLANNERS
320 FORTALEZA STREET 2nd FLOOR SAN JUAN, PUERTO RICO 00902 TELS. 721-4545 721-4546

SHEET TITLE:
PROPOSED PLAZA
MISCELLANEOUS DETAILS
SCALE: AS SHOWN

CODE NO:
08-903-

DRAWING NO:
A-9

DATE	REVISIONS

SHEET NO:
20
OF
00

N:\Proj\ARECIBO\903 PLAZA ARECIBO\DWG'S\019-020-903A-8-A-9.dwg

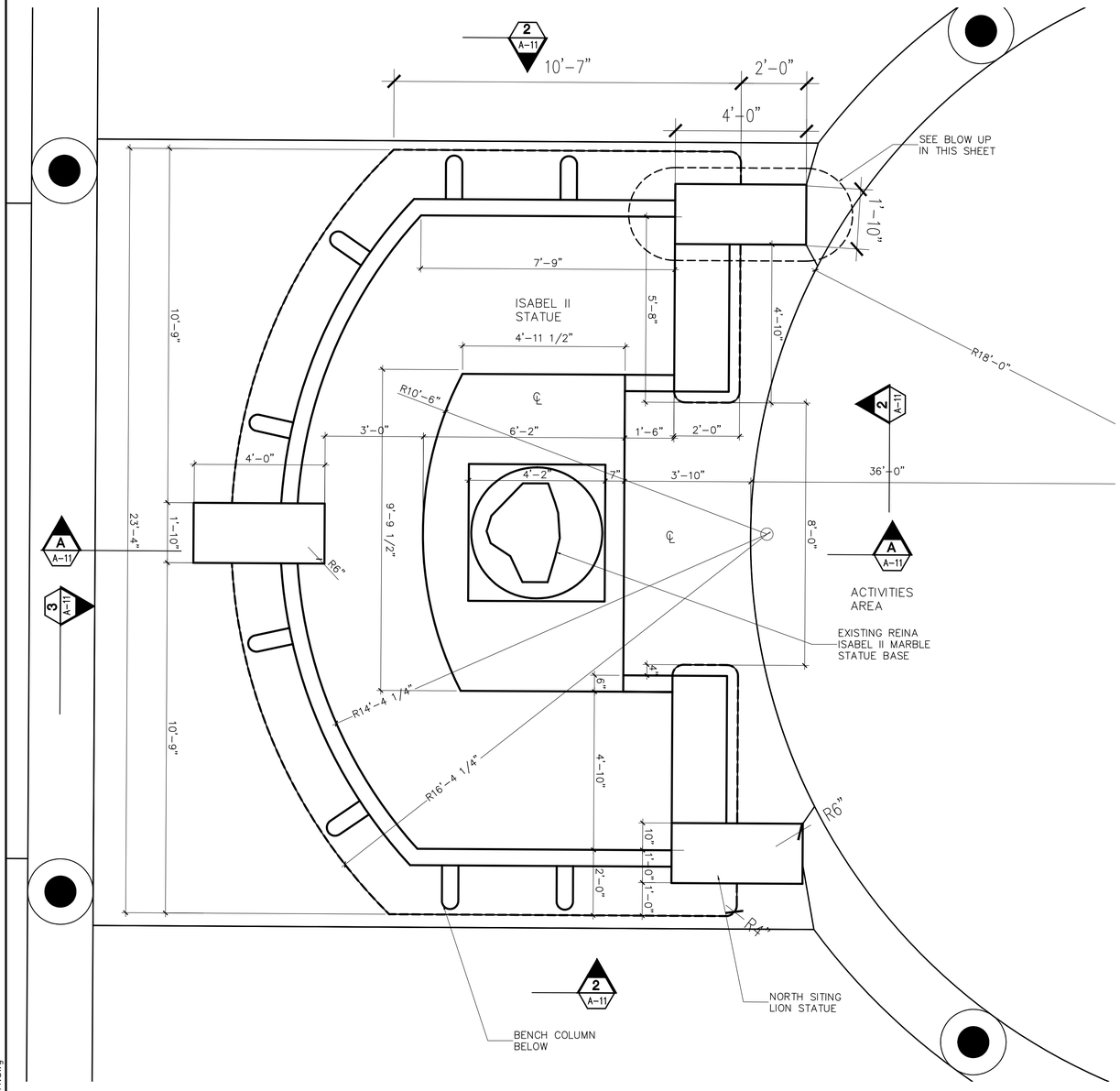

PROPOSED BLOW UP REINA ISABEL II FLOOR PLAN
SCALE: 1/2"=1'-0"

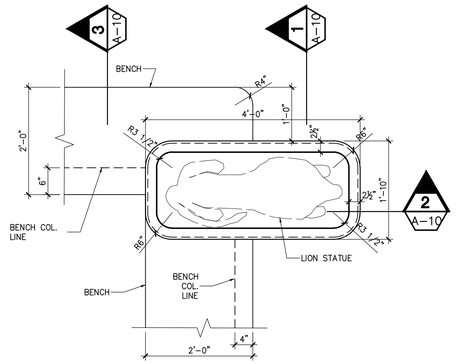

PLAN
SCALE: 3/4" = 1'-0"

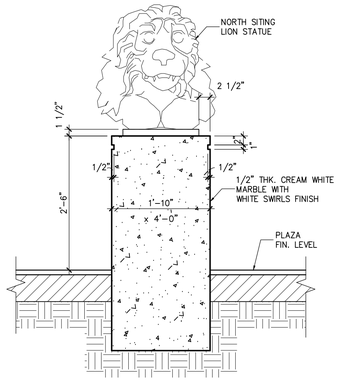

SECTION
SCALE: 3/4" = 1'-0"

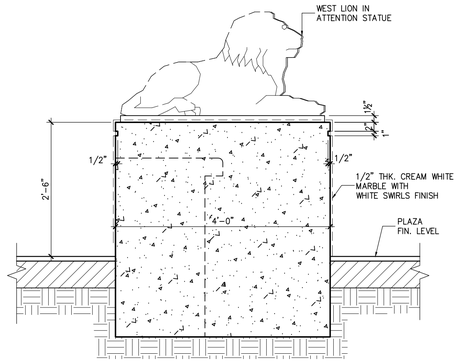

SECTION
SCALE: 3/4" = 1'-0"

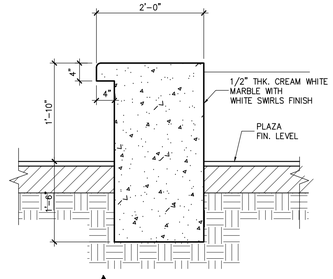

SECTION
SCALE: 3/4" = 1'-0"

PROPOSED LION BASE AND BENCH BLOW UP
SCALE: 1/2"=1'-0"

REVITALIZATION OF
LUIS MUÑOZ RIVERA PLAZA
IN THE URBAN CENTER
ARECIBO, PUERTO RICO

IGLESIAS•VAZQUEZ and ASSOCIATES
320 FORTALEZA STREET 2nd FLOOR SAN JUAN, PUERTO RICO 00902 TELS. 721-4545 721-4546
ENGINEERS • ARCHITECTS • PLANNERS

SHEET TITLE:
PROPOSED BLOW UP
REINA ISABEL II FLOOR PLAN
SCALE: AS SHOWN

CODE NO:
08-903-

DRAWING NO:
A-10

SHEET NO:
21
OF
00

DATE	REVISIONS

N:\Proj\ARECIBO\903 PLAZA ARECIBO\DWG'S\021-0022903A-10-A-11.dwg

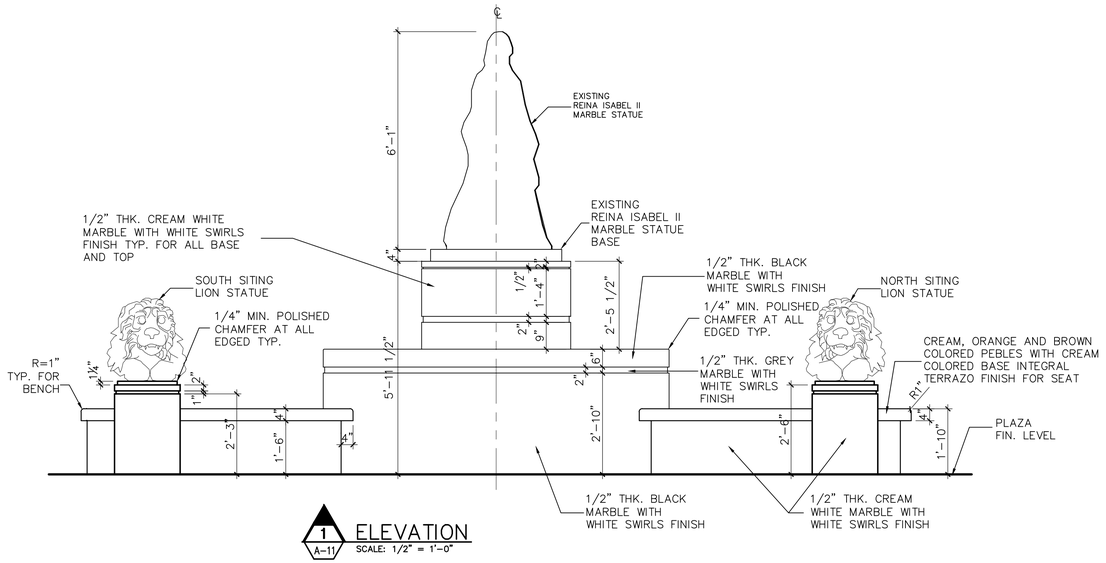

1 A-11 ELEVATION
SCALE: 1/2" = 1'-0"

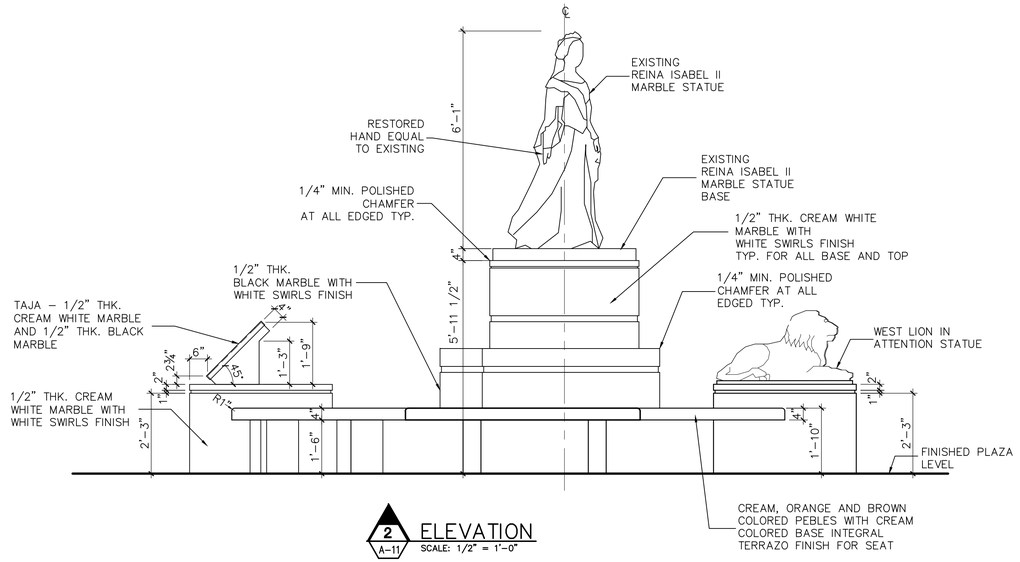

2 A-11 ELEVATION
SCALE: 1/2" = 1'-0"

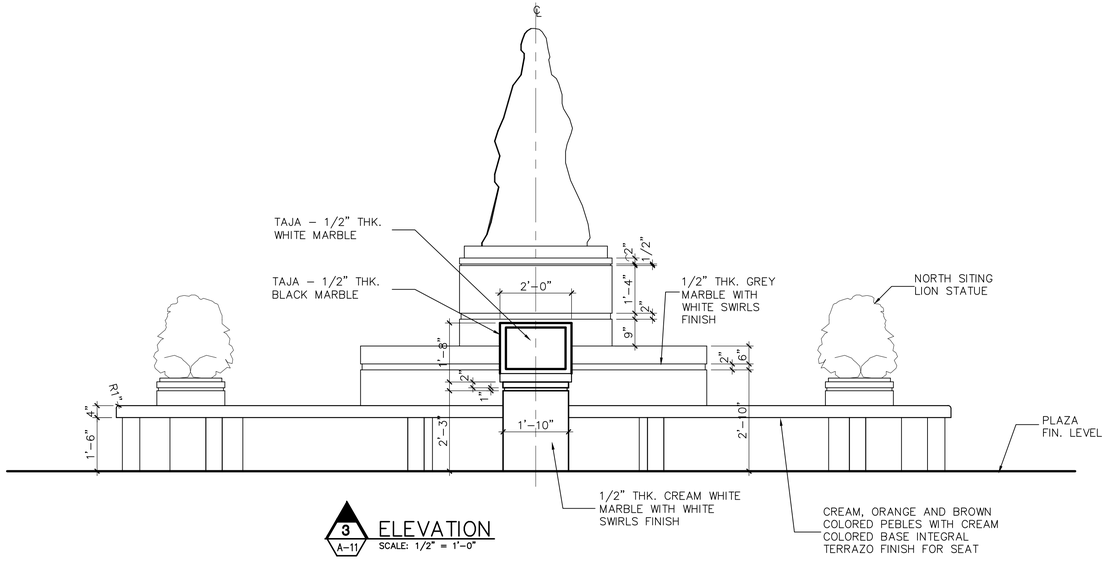

3 A-11 ELEVATION
SCALE: 1/2" = 1'-0"

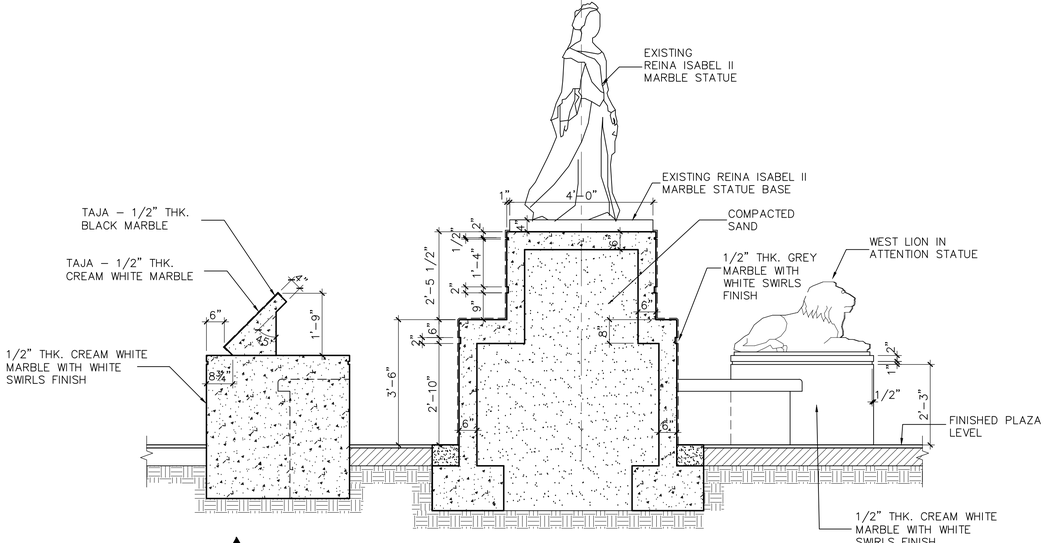

A A-11 SECTION
SCALE: 1/2" = 1'-0"

REVITALIZATION OF
LUIS MUÑOZ RIVERA PLAZA
IN THE URBAN CENTER
ARECIBO, PUERTO RICO

IGLESIAS•VAZQUEZ and ASSOCIATES
ENGINEERS • ARCHITECTS • PLANNERS
350 FORTALEZA STREET 2nd FLOOR SAN JUAN, PUERTO RICO 00902 TELS. 721-4545 721-4546

SHEET TITLE:
PROPOSED ELEVATION AND SECTION
REINA ISABEL II
SCALE: AS SHOWN

CODE NO:
08-903-

DRAWING NO:
A-11

DATE	REVISIONS

SHEET NO:
22
OF
00

N:\Proj\ARECIBO\903 PLAZA ARECIBO\DWG'S\021-0022903A-10-A-11.dwg

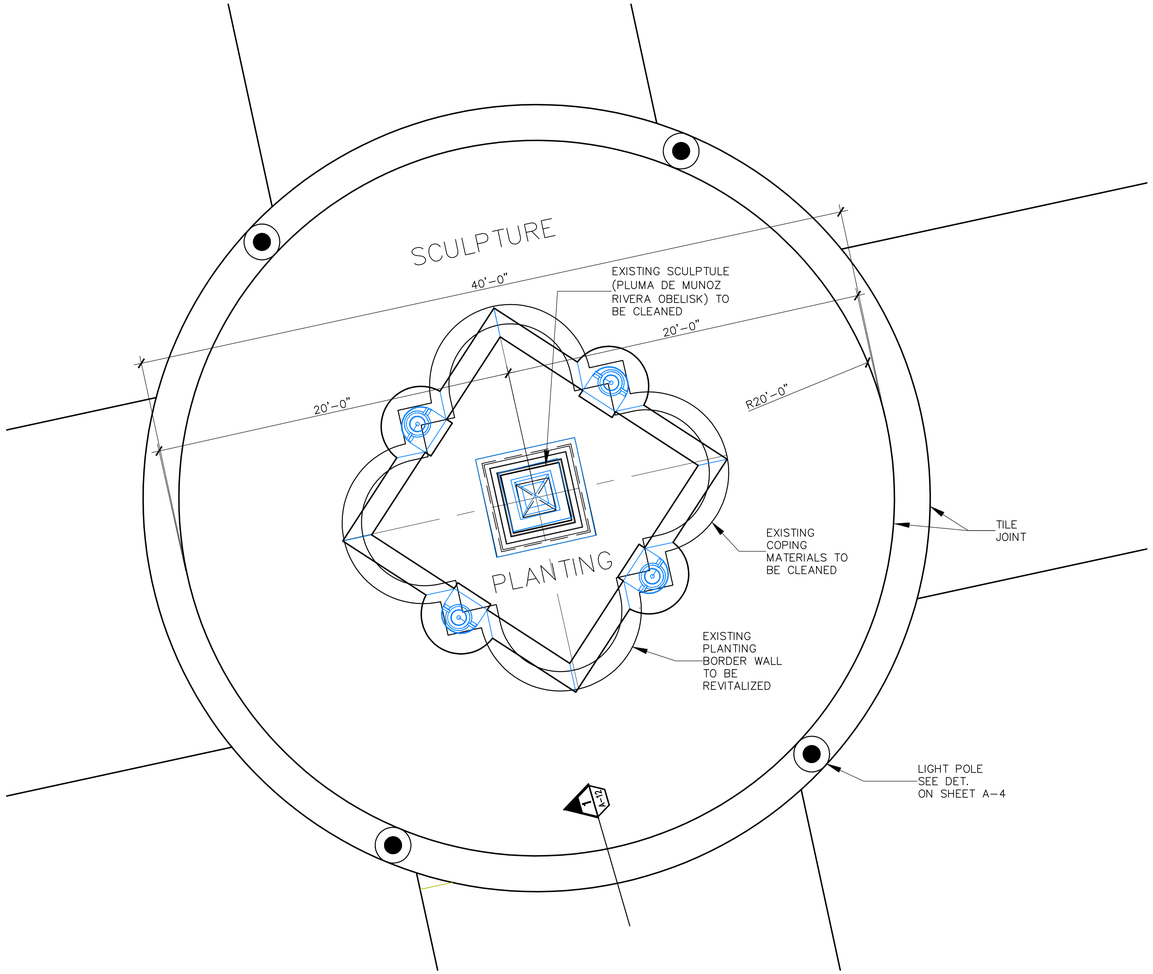

PROPOSED BLOW UP EXISTING SCULPTURE FLOOR PLAN
SCALE: 1/4"=1'-0"

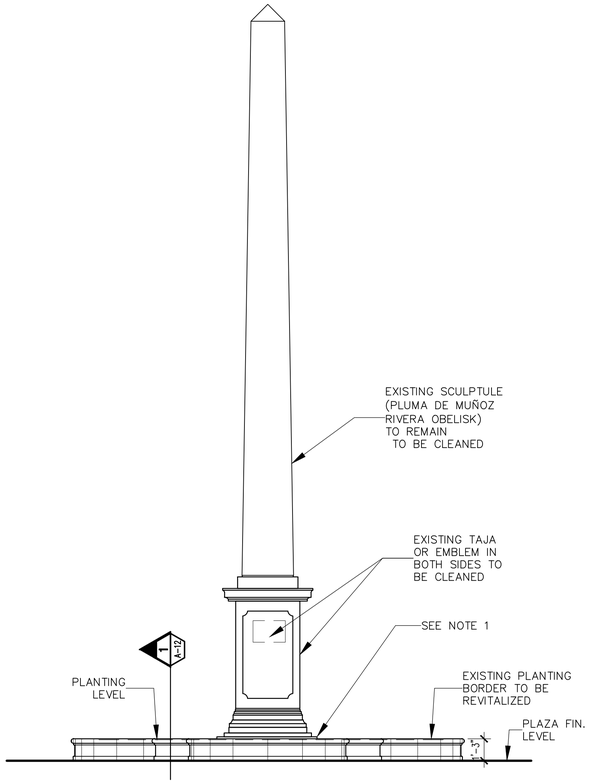

ELEVATION
SCALE: 1/4"=1'-0"

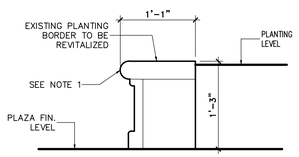

1
A-12
EXIST. OBELISK PLANTER SECTION
SCALE: 1" = 1'-0"

NOTE:

1 - EXISTING COPING MATERIALS TO BE CLEANED AND REVITALIZED

REVITALIZATION OF
LUIS MUÑOZ RIVERA PLAZA
IN THE URBAN CENTER
ARECIBO, PUERTO RICO

IGLESIAS•VAZQUEZ and ASSOCIATES
320 FORTALEZA STREET 2nd FLOOR SAN JUAN, PUERTO RICO 00902 TELS. 721-4545 721-4546
ENGINEERS • ARCHITECTS • PLANNERS

SHEET TITLE:
PROPOSED BLOW UP SCULPTURE
FLOOR PLAN, ELEVATIONS AND DETS.
SCALE: AS SHOWN

CODE NO:
08-903-

DRAWING NO:
A-12

DATE	REVISIONS

SHEET NO:
23
OF
00

N:\Proj\ARECIBO\903 PLAZA ARECIBO\DWG'S\023-903A-12.dwg

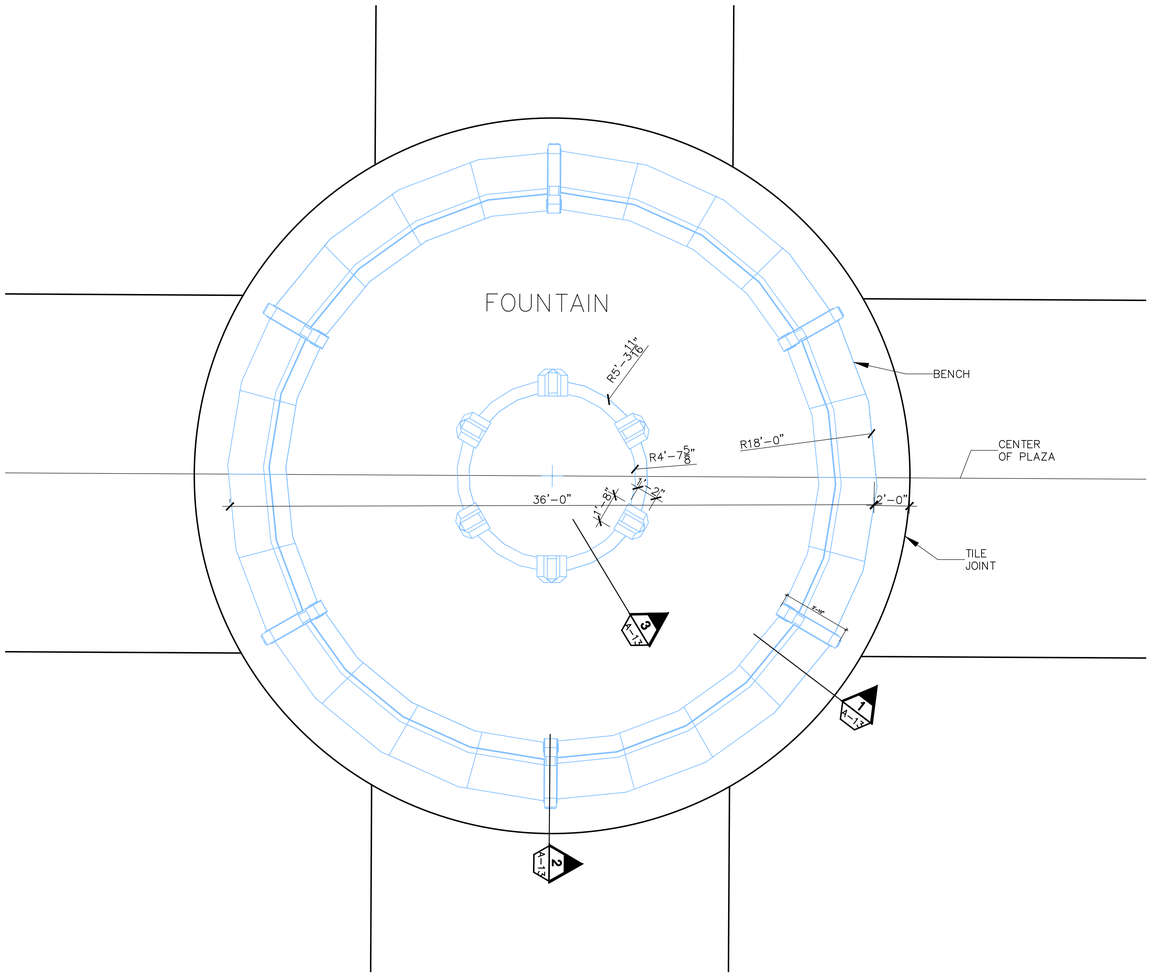

PROPOSED BLOW UP FOUNTAIN FLOOR PLAN
SCALE: 1/4"=1'-0"

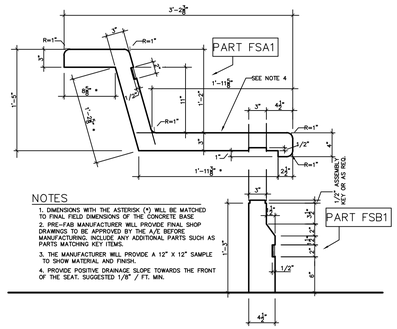

SECTION OF FOUNTAIN SEAT PRE-FAB ASSEMBLY
SCALE: 1" = 1'-0"

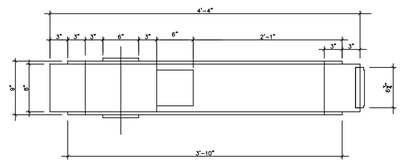

TOP VIEW INTERMEDIATE PRE-FAB ASSEMBLY
SCALE: 1" = 1'-0"

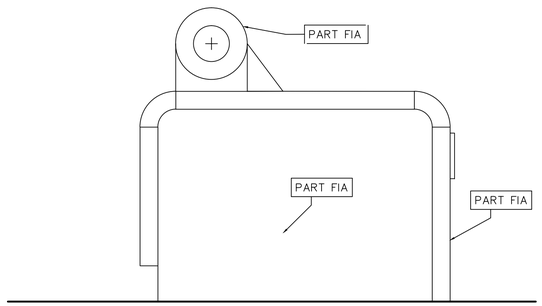

SECTION OF FOUNTAIN INTERMEDIATE PRE-FAB ASSEMBLY
SCALE: 1" = 1'-0"

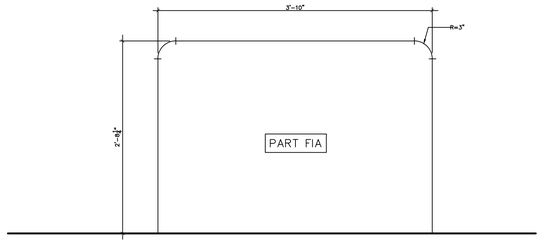

OUT LINE PRE-FAB
SCALE: 1" = 1'-0"

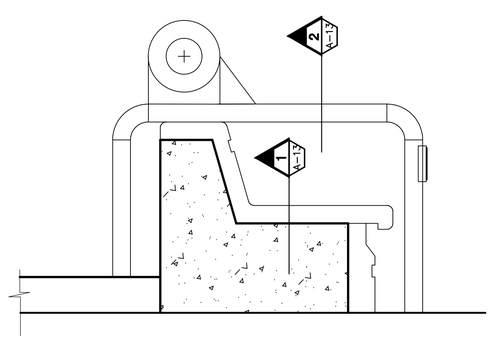

COMPOSITE VIEW INTERMEDIATE PRE-FAB ASSEMBLY
SCALE: 1" = 1'-0"

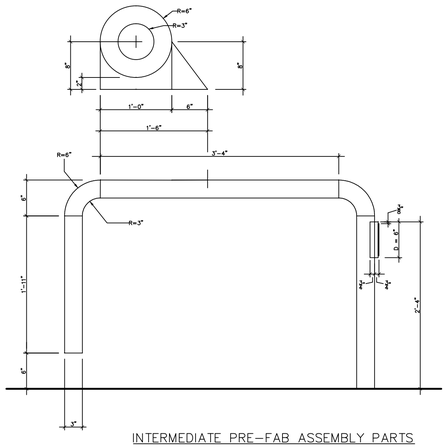

INTERMEDIATE PRE-FAB ASSEMBLY PARTS
SCALE: 1" = 1'-0"

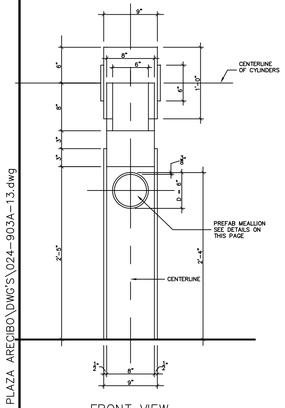

FRONT VIEW
SCALE: 1 1/2" = 1'-0"

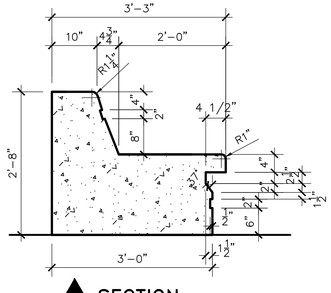

1 A-13 SECTION
SCALE: 3/4" = 1'-0"

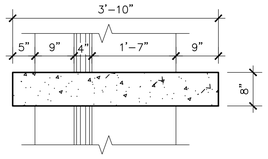

PLAN VIEW
SCALE: 3/4" = 1'-0"

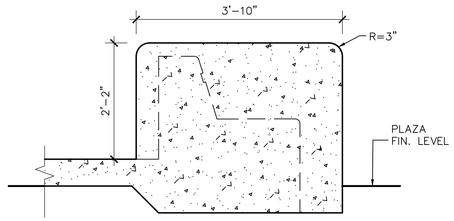

2 A-13 SECTION (PART F1A)
SCALE: 3/4" = 1'-0"

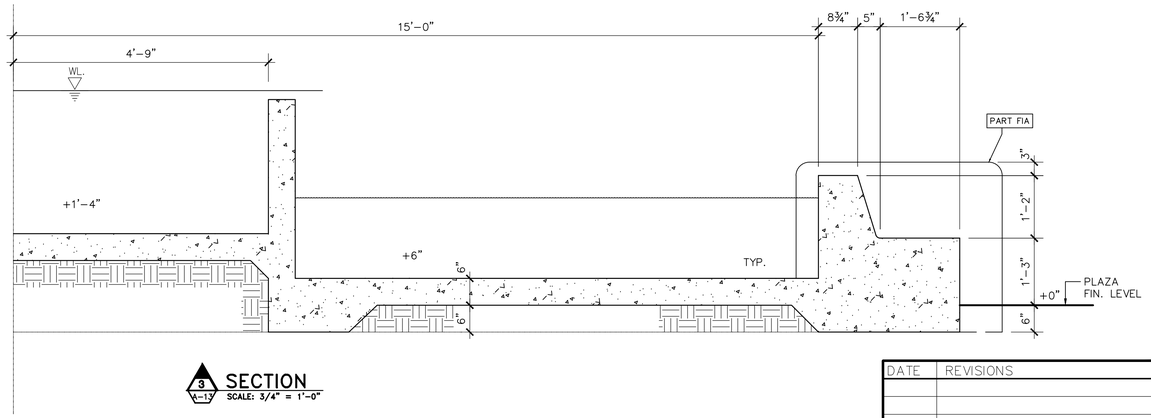

3 A-13 SECTION
SCALE: 3/4" = 1'-0"

DATE	REVISIONS

REVITALIZATION OF
LUIS MUÑOZ RIVERA PLAZA
IN THE URBAN CENTER
ARECIBO, PUERTO RICO

IGLESIAS•VAZQUEZ and ASSOCIATES
ENGINEERS • ARCHITECTS • PLANNERS
320 FORTALEZA STREET 2nd FLOOR SAN JUAN, PUERTO RICO 00902 TELS. 721-4545 721-4546

SHEET TITLE:
PROPOSED BLOW UP FOUNTAIN
FLOOR PLAN, ELEVATION AND DETS.
SCALE: AS SHOWN

CODE NO:
08-903-

DRAWING NO:
A-13

SHEET NO:
24
OF
00

N:\Proj\ARECIBO\903 PLAZA ARECIBO\DWG'S\024-903A-13.dwg

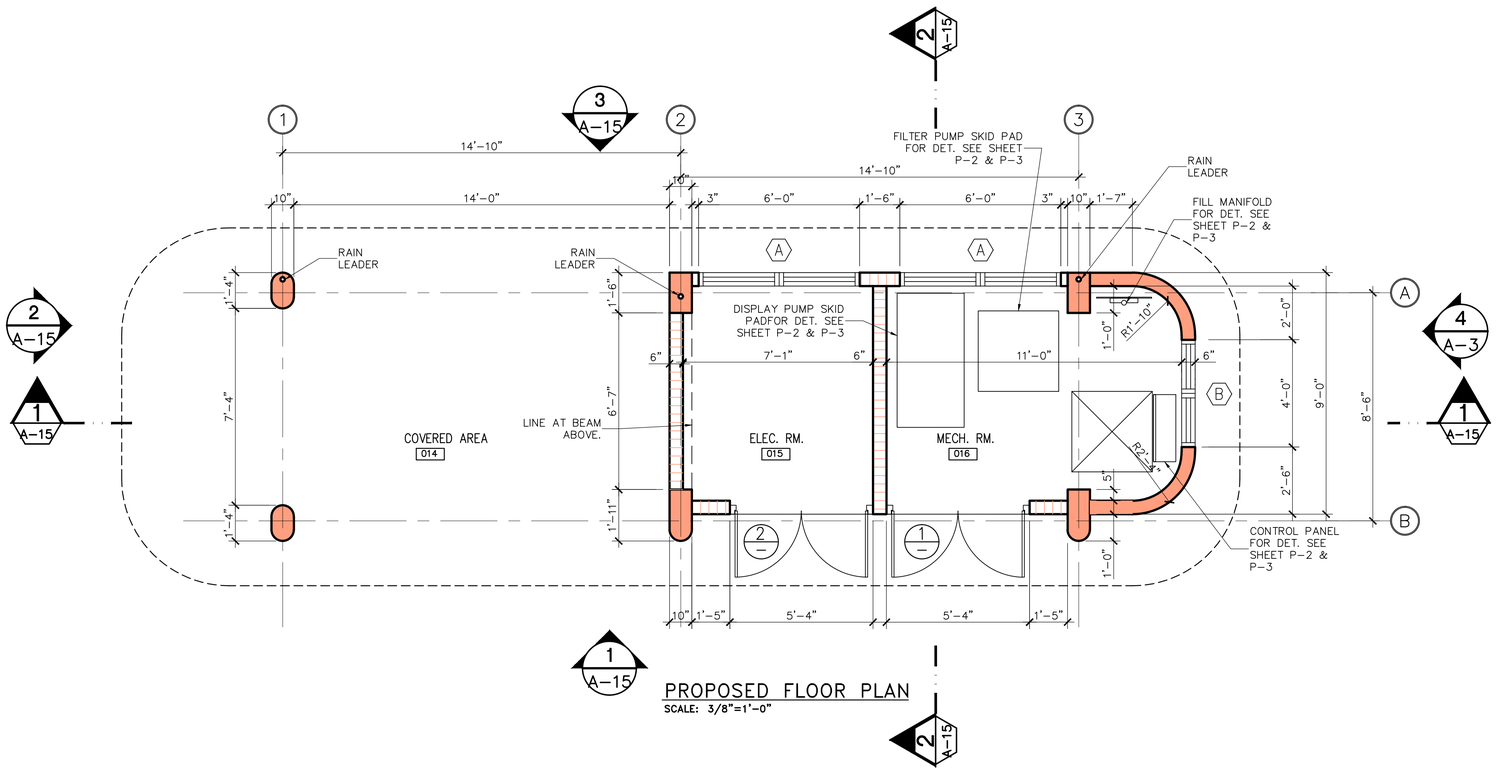

PROPOSED FLOOR PLAN

SCALE: 3/8"=1'-0"

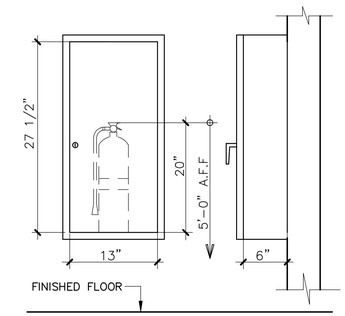

TYP. FIRE EXTINGUISHER CABINET

SCALE: NONE

FIRE EXTINGUISHER SURFACE
MOUNTED CABINET EQ. OR APP.
LARSEN ARCHITECTURAL SERIES
MODEL 2409-SM-WIRE GLASS
DOOR AND FIRE HANDLE, WITH
MP-10 FIRE EXTINGUISHER

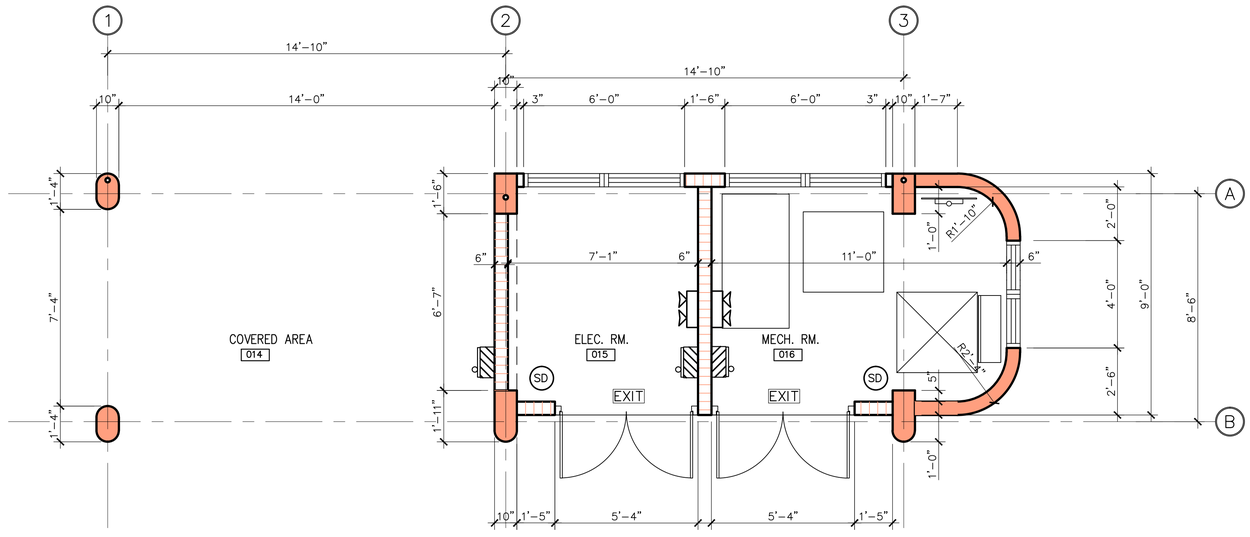

PROPOSED FIRE PROTECTION PLAN

SCALE: 3/8"=1'-0"

FIRE ALARM SYSTEM LEGEND

SD — ADDRESSABLE IONIZATION SMOKE DETECTOR EQUAL TO EQUAL OR SIMILAR TO HONEYWELL MO. ASD-PL3R - BASE MO. B501 SUBMIT FOR APPROVE.

FIRE EXTINGUISHER (SEE TYPICAL DETAIL ON THIS SHEET)

WALL EMERGENCY LIGHT W/ BATTERY BACK UP SEE ELECT. DWG.

EXIT — EXIST SIGN MC PHILBEN / LED ER55L-1-WB-R

REVITALIZATION OF LUIS MUÑOZ RIVERA PLAZA IN THE URBAN CENTER
ARECIBO, PUERTO RICO

IGLESIAS•VAZQUEZ and ASSOCIATES
320 FORTALEZA STREET 2nd FLOOR SAN JUAN, PUERTO RICO 00902 TELS. 721-4545 721-4546
ENGINEERS • ARCHITECTS • PLANNERS

SHEET TITLE: PROPOSED FLOOR & FIRE PROTEC. PLANS MECH. AND ELECT. ROOM
SCALE: AS SHOWN

CODE NO: 08-903-

DRAWING NO: A-14

DATE	REVISIONS

SHEET NO: 25 OF 00

N:\Proj\ARECIBO\903 PLAZA ARECIBO\DWG'S\025-026-903A-14-A-15.dwg

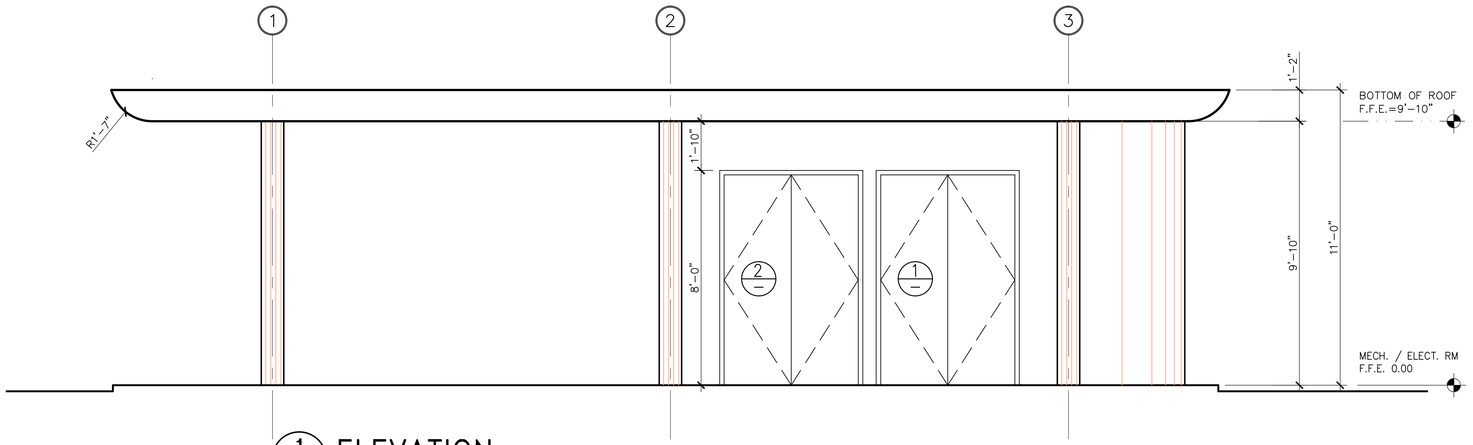

1 / A-15 ELEVATION
SCALE: 3/8" = 1'-0"

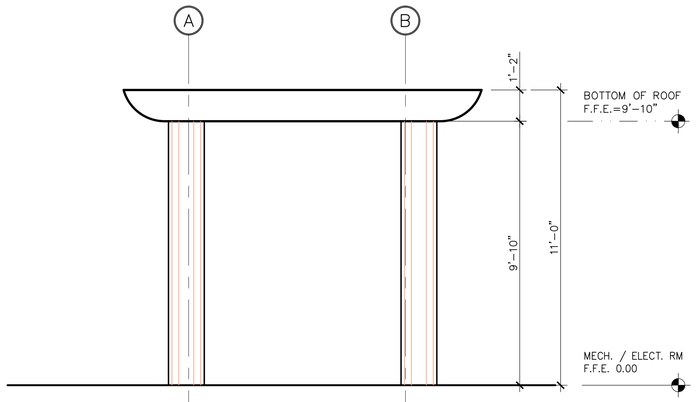

2 / A-15 ELEVATION
SCALE: 3/8" = 1'-0"

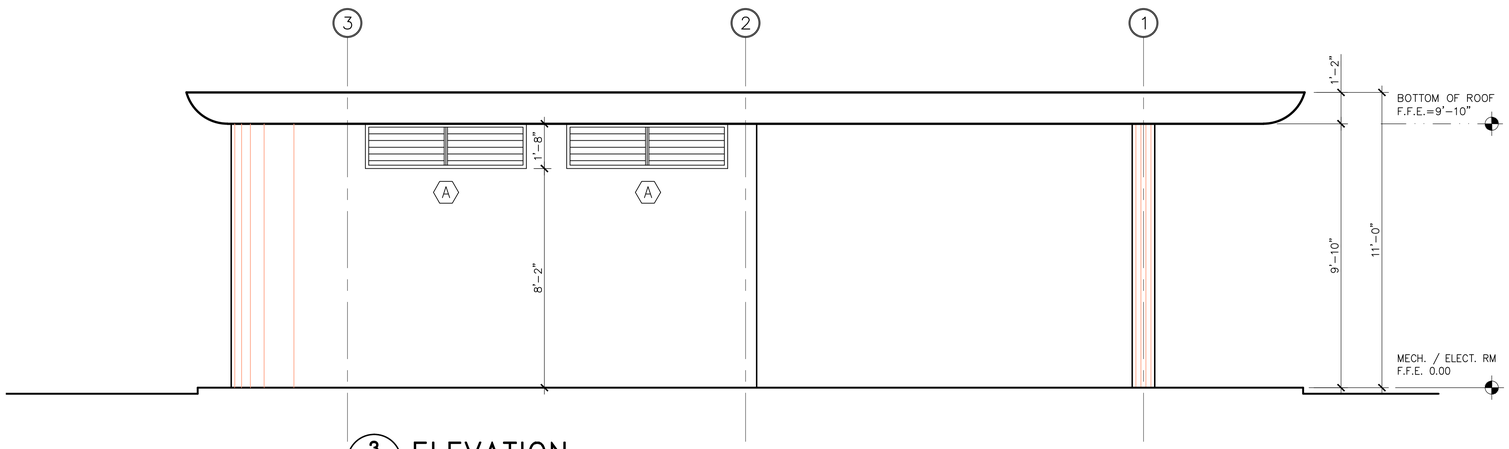

3 / A-15 ELEVATION
SCALE: 3/8" = 1'-0"

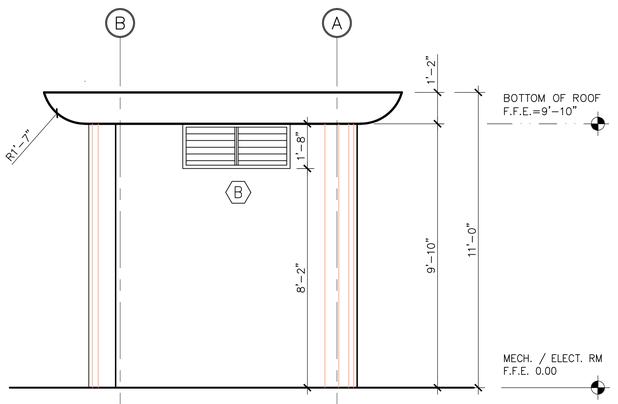

4 / A-15 ELEVATION
SCALE: 3/8" = 1'-0"

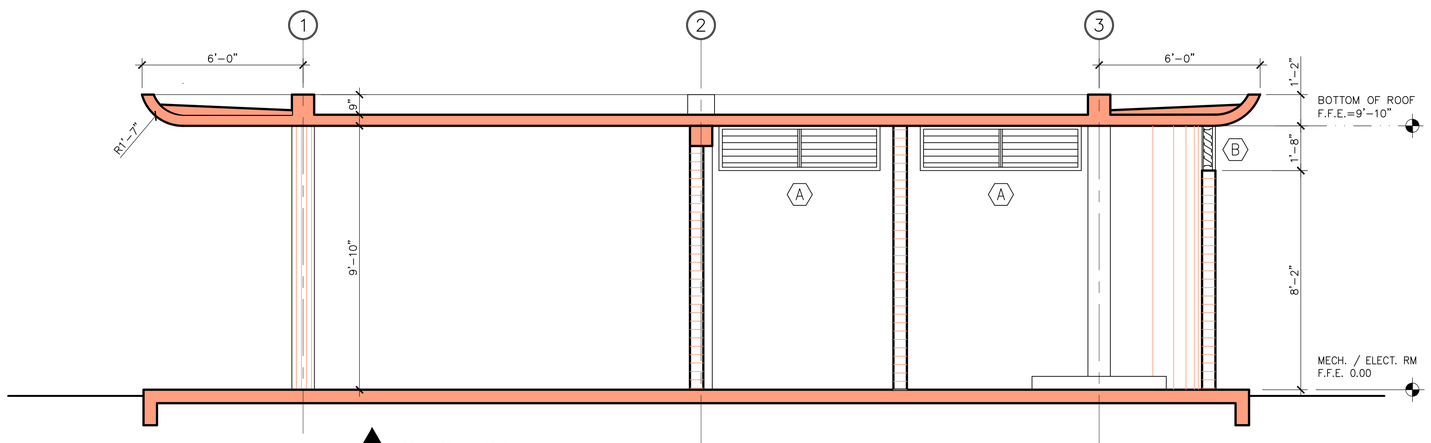

A / A-15 SECTION
SCALE: 1/4" = 1'-0"

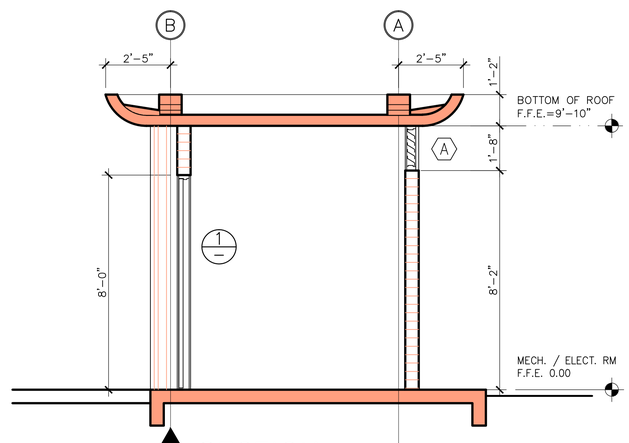

B / A-15 SECTION
SCALE: 1/4" = 1'-0"

REVITALIZATION OF
LUIS MUÑOZ RIVERA PLAZA
IN THE URBAN CENTER
ARECIBO, PUERTO RICO

IGLESIAS•VAZQUEZ and ASSOCIATES
320 FORTALEZA STREET 2nd FLOOR SAN JUAN, PUERTO RICO 00902 TELS. 721-4545 721-4546
ENGINEERS • ARCHITECTS • PLANNERS

SHEET TITLE:
PROPOSED ELEVATIONS & SECTIONS
MECH. AND ELECT. ROOM
SCALE: AS SHOWN

CODE NO:
08-903-

DRAWING NO:
A-15

SHEET NO:
26
OF
00

DATE	REVISIONS

N:\Proj\ARECIBO\903 PLAZA ARECIBO\DWG'S\025-026-903A-14-A-15.dwg

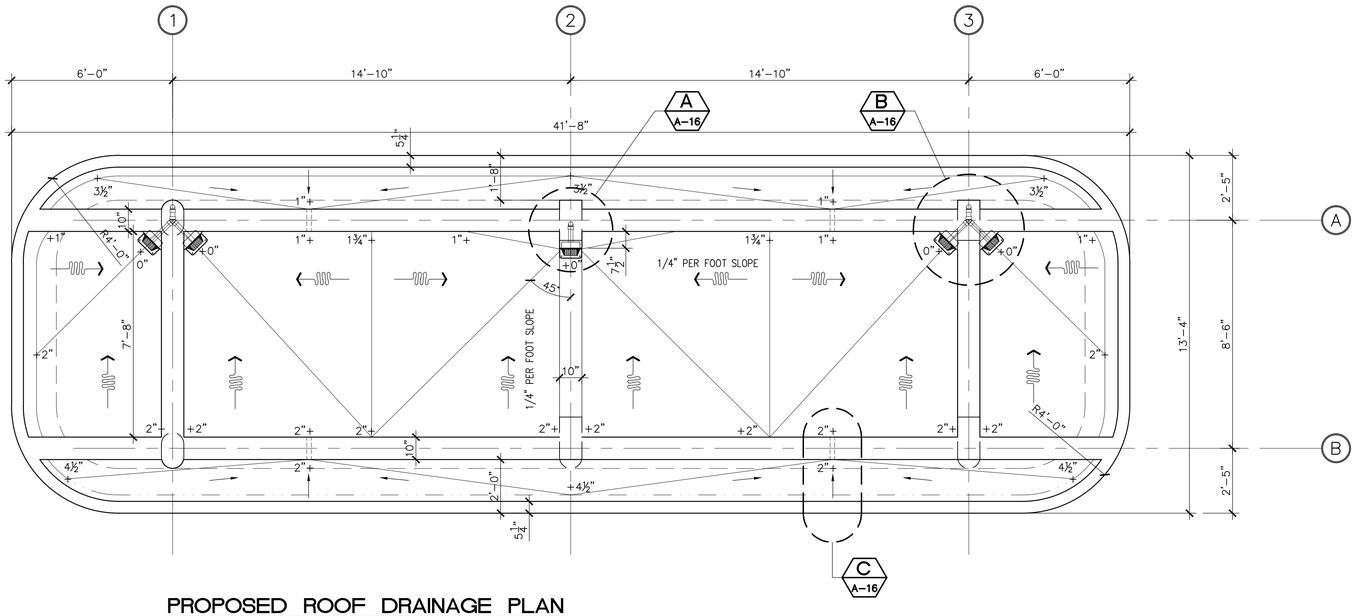

PROPOSED ROOF DRAINAGE PLAN

SCALE: 3/8"=1'-0"

NOTES:

1. FLUID WATER PROOFING APPLIES EQ. OR APP. EQ. TO HYDRO-STOP INC. REFER TO SPEC. ROOFING SECTION.
2. ALL FLASHING SHALL BE DESIGNED FOR THE APPLICABLE CONDITIONS. METAL THICKNESS, FASTENERS, AND LAPPING ALL BE AS SPECIFIED BY THE ROOF MANUFACTURER.
3. REFER TO THE SPECIFICATIONS FOR SPECIFIC EXECUTION REQUIREMENTS.
4. REFER TO TECHNICAL SPECIFICATION NO.07712 FLUID APPLIED ROOFING. (OVER LIGHTWEIGHT CONCRETE).

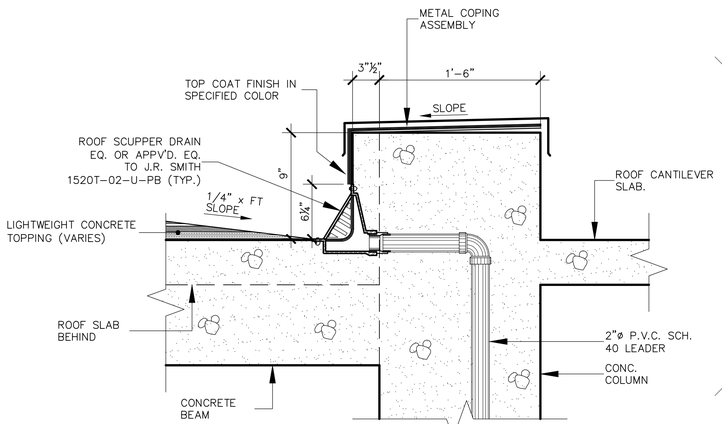

SECTION

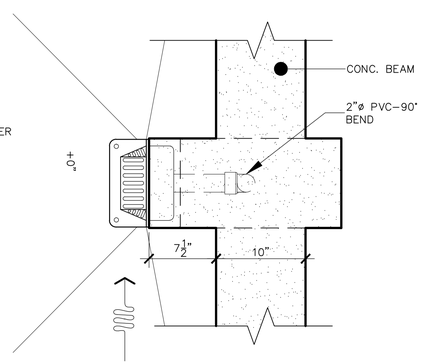

TOP VIEW PLAN

ROOF DRAIN DETAIL A

SCALE: 1 1/2"=1'-0"

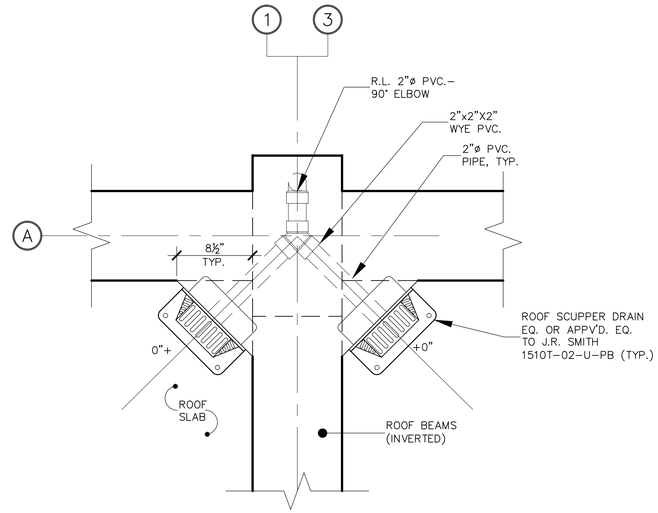

ROOF DRAIN BLOW-UP DETAIL B

SCALE: 1 1/2"=1'-0"

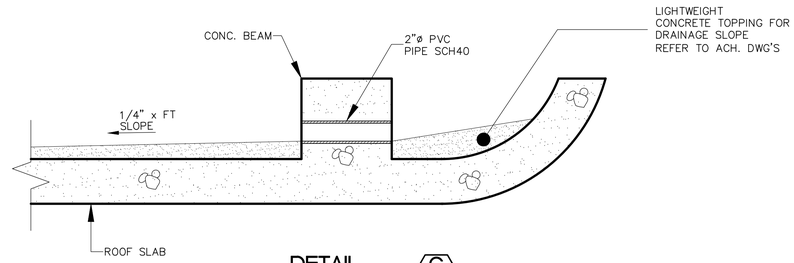

DETAIL C

SCALE: 1 1/2"=1'-0"

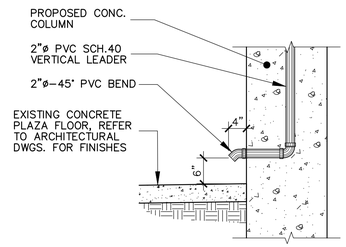

DOWN SPOT DETAIL D

SCALE: 3/4"=1'-0"

IGLESIAS•VAZQUEZ and ASSOCIATES
320 FORTALEZA STREET 2nd FLOOR SAN JUAN, PUERTO RICO 00902 TELS. 721-4545 721-4546
ENGINEERS • ARCHITECTS • PLANNERS

REVITALIZATION OF
LUIS MUÑOZ RIVERA PLAZA
IN THE URBAN CENTER
ARECIBO, PUERTO RICO

SHEET TITLE:
PROPOSED ROOF DRAINAGE PLAN
SCALE: AS SHOWN

CODE NO:
08-903-

DRAWING NO:
A-16

DATE	REVISIONS

SHEET NO:
27
OF
00

N:\Proj\ARECIBO\903 PLAZA ARECIBO\DWG'S\027-903A-16.dwg

DOORS SCHEDULE

D / 4 DOOR HARDWARE		DOOR								FRAME				REMARKS
		DOOR SIZE		MASONRY OPNG.		TRANSOME		PROPERTIES						
NO.	TYPE	WIDTH	HEIGHT	WIDTH	HEIGHT	WIDTH	HEIGHT	MATERIAL	GAUGE	GAUGE	MATERIAL	JAMB	HEAD	
1	I	5'–4"	7'–10"	5'–0"	8'–0"	–	–	ALUM.		N/A	ALUM.	–	–	
2	II	5'–4"	7'–10"	5'–0"	8'–0"	–	–	ALUM.		N/A	ALUM.	–	–	

NOTES ON DOORS:

1. FOR HARDWARE SCHEDULE REFER TO TECHNICAL SPECIFICATION.
2. FOR METAL DOORS & FRAME REFER TO TECHNICAL SPECIFICATION.
3. FOR ALUMINUM GLASS DOORS & FRAME EQUAL OR APPROVED EQUAL TO AIR MASTER AWNING, GLASS COLOR TO BE SELECT BY OWNER
4. FOR ALL DOOR SUBMIT SAMPLE AND SHOP DRAWING.

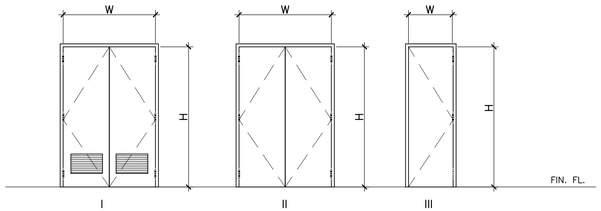

DOORS TYPE

WINDOWS SCHEDULE

MRK'D	WINDOW TYPE	MASONRY OPENING		WINDOW SIZE			QUANTITY	REMARKS
		WIDTH	HEIGHT	WIDTH	HEIGHT	MATERIAL		
A	I	6'–0"	1'–8"			ALUMINUM	2	LOUVERS TYPE Z
B	I	4'–0"	1'–8"			ALUMINUM	2	LOUVERS TYPE Z

NOTES ON WINDOWS:

1. ALL WINDOW EQUAL OR APPROVED EQUAL TO AIR MASTER AWNING, GLASS COLOR TO BE SELECT BY OWNER.

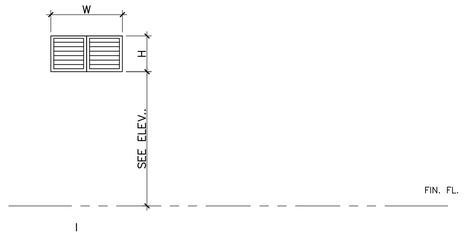

WINDOWS TYPE

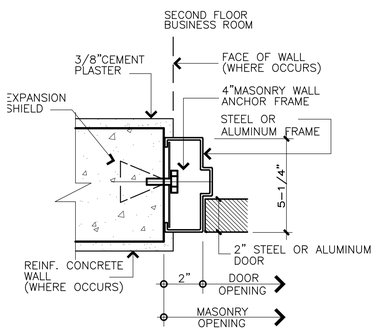

TYP. JAMB DETAIL J-1
NOT TO SCALE

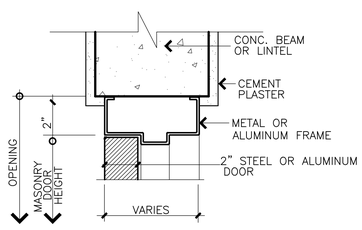

TYP, HEAD DETAIL H-1
NOT TO SCALE

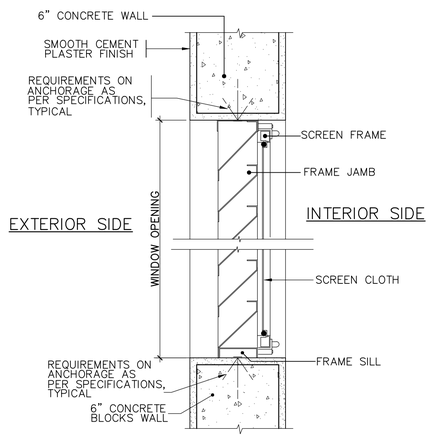

TYP, LOVERS WINDOW DET.
NOT TO SCALE

- 4.625" ALUMINUM JALOUSIES FRAMES WINDOW.
- FRAME SHALL BE BAKED ENAMEL.
- COLOR TO BE SELECTED BY ARCHITECT.

REVITALIZATION OF
LUIS MUÑOZ RIVERA PLAZA
IN THE URBAN CENTER
ARECIBO, PUERTO RICO

IGLESIAS•VAZQUEZ and ASSOCIATES
320 FORTALEZA STREET 2nd FLOOR SAN JUAN, PUERTO RICO 00902 TELS. 721-4545 721-4546
ENGINEERS • ARCHITECTS • PLANNERS

SHEET TITLE: PROPOSED DOORS AND WINDOWS SCHEDULES
SCALE: AS SHOWN

CODE NO: 08-903-

DRAWING NO: A-17

DATE	REVISIONS

SHEET NO: 28 OF 00

N:\Pro1\ARECIBO\903 PLAZA ARECIBO\DWG'S\028-903A-17.dwg

PROPOSED FINISHES SCHEDULE

MK'D.	SPACES	FLOOR												BASE												WALLS								CEILINGS					REMARKS
000		24"X24" FLOOR TILES MO. DIGNITARY COLOR: ——— BY DALTILE	24"X24" FLOOR TILES MO. DIGNITARY COLOR: ——— BY DALTILE	24"X24" FLOOR TILES MO. DIGNITARY COLOR: ——— BY DALTILE	24"X24" FLOOR TILES MO. DIGNITARY COLOR: ——— BY DALTILE	24"X24" FLOOR TILES MO. DIGNITARY COLOR: ——— BY DALTILE	MARBLE TILES COLOR: VARIES	1-3/16"X1" SCHLUTER RSP-E/-ER STAINLESS STEEL SCHIENE, SEE WORK SEC MOE NO. 8	POLISHED CEMENT	EXISTING TO REMAIN	EXISTING TO BE CLEANED AND REVITALIZED	3"X24" BASE MO. DIGNITARY COLOR: ——— BY DALTILE	3"X24" BASE MO. DIGNITARY COLOR: ——— BY DALTILE	3"X24" BASE MO. DIGNITARY COLOR: ——— BY DALTILE	3"X24" BASE MO. DIGNITARY COLOR: ——— BY DALTILE	MARBLE TILES COLOR: VARIES	STAIR RISE AND RAMP CURBES DIM.) TILES AS FLOOR COLOR ——— BY DALTILE	POLISHED CEMENT	EXISTING TO REMAIN	EXISTING TO BE CLEANED AND REVITALIZED	CEMENT PLASTER	PAINT FINISH	MARBLE TILES	POLISHED CEMENT	EXISTING TO REMAIN	EXISTING TO BE CLEANED AND REVITALIZED	CEMENT PLASTER AND PAINT	5/8" GYPSUM BOARD - GLASS MAT PANELS MOLD TOUGH FIRECODE TYPE X - W/WATER RESISTANT PANELS & PAINT	1/2" (12MM) PLYCEM CEILING SYSTEM & PAINT	EXPOSED CEILING (ROOF SLAB)		
PLAZA LEVEL																																						
001	PLAZA	●	●	●								●																											
002	ISABEL II STATUE			●		●										●								●														SEE DETAIL ON SHEET A–
003	ACTIVITIES AREA	●		●																																		
004	SCULPTULE	●		●															●								●	●										SEE DETAIL ON SHEET A–
005	FOUNTAIN								●									●								●												SEE DETAIL ON SHEET A–
006	STAIR –W				●		●									●																						SEE DETAIL ON SHEET A–
007	STAIR –E				●		●									●																						SEE DETAIL ON SHEET A–
008	STAIR – 1				●		●									●																						SEE DETAIL ON SHEET A–
009	STAIR – 2				●		●									●																						SEE DETAIL ON SHEET A–
010	STAIR – 3				●		●									●																						SEE DETAIL ON SHEET A–
011	RAMP – 1				●											●																						SEE DETAIL ON SHEET A–
012	RAMP – 2				●											●																						SEE DETAIL ON SHEET A–
013	RAMP – 3				●											●																						SEE DETAIL ON SHEET A–
014	COVERED AREA	●																●								●								●					SEE DETAIL ON SHEET A–
015	ELECTRICAL ROOM								●									●								●								●					SEE DETAIL ON SHEET A–
016	MECHANICAL ROOM								●									●								●								●					SEE DETAIL ON SHEET A–
017	SIDEWALK									●	●									●	●																		
018																																						
019																																						
020																																						

NOTES ON FINISHES:

1. ALL INTERIOR AND EXTERIOR WALLS MUST BE PAINTED (PPG PAINTS) COLOR TO BE SERECT BY OWNER EXCEPT THOSE THAT ARE GOING TO RECEIVED TILES. REFER TO SPEC'S.
2. ALL CERAMIC AND TILES SHALL BE EQ. OR APP'D EQ. TO DALTILE. BASE AND WALLS TILES BY DALTILE. DALTILE CERAMICS WILL BE SELECTED BY DESIGNER. FOR COLOR AND MODEL SEE FINISH SCHEDULE. GROUTS SPACING TO BE RECOMMENDED BY CERAMIC TILES MANUF. TILES PRODUCTS DISTRIBUTED DAL–TILE CORPORATION PHONE NUMBER (787)791–6618, (787)428–5128 ADRESS: 430 CALLE 2 PALMAS IND. ZONE CATAÑO P.R. 00962
3. ALL DAMAGE EXISTING TILE SHOULD BE REPLACE BY NEW EQ. OR APP'D EQ.TO EXIST NEW TILE.
4. ALL EXIST. CONCRETE CEILING TO BE CEMENT PLASTER WHERE NEEDED AND TO BE PAINT ALL CEILING.
5. WALL AND FLOOR CERAMIC TILE TO BE INSTALL CONTRASTED PATTERN.
6. GROUTS BY MAPEI SEE SPECS. COLORS TO BE SELECT BY DESIGNER.
7. SCHLUTER PRODUCTS BY DAL–TILE CORPORATION PHONE NUMBER (787)791–6618, (787)428–5128 ADRESS: 430 CALLE 2 PALMAS IND. ZONE CATAÑO P.R. 00962

ALUMINUM & STAINLESS STEEL NOTES:

1. ALL ALUMINUM IN THIS PROJECT SHALL BE ALUMINUM 6061–T6.
2. ALL STAINLESS STEEL IN THIS PROJECT SHALL BE STAINLESS STEEL 316.

CEILING NOTES:

1. ALL PLYCEM CEILING 1/2" (12MM) PANELS. PAINTED (PPG PAINTS) COLOR TO BE SELECT BY OWNER.
2. ALL GYPSUM BOARD CEILING – GLASS MAT PANELS MOLD TOUGH 5/8" FIRECODE TYPE X – WITH WATER RESISTANT PANELS. PAINTED (PPG PAINTS) COLOR TO BE SELECT BY OWNERS.

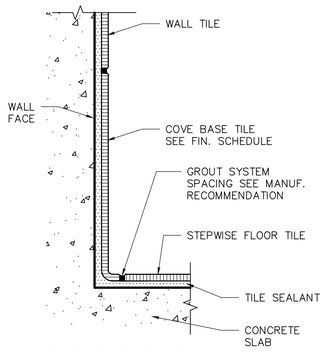

TYP. TILE FINISH COVE BASE DETAIL 1 / A–18
SCALE: 3"=1'–0"

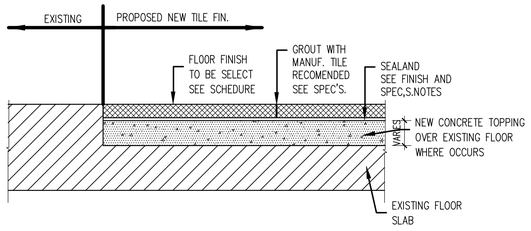

TYPICAL FLOOR FINISH DETAIL

NOT TO SCALE

NOTE:
THE CONTRACTOR WILL BE RESPONSIBLE FOR PREPARING THE FLOOR BEFORE NEW FLOOR TOPPING AND FINISH.

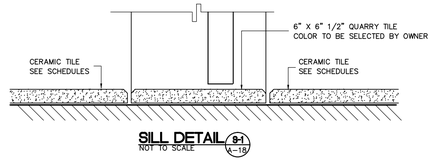

SILL DETAIL 9+1 / A–18
NOT TO SCALE

REVITALIZATION OF
LUIS MUÑOZ RIVERA PLAZA
IN THE URBAN CENTER
ARECIBO, PUERTO RICO

IGLESIAS•VAZQUEZ and ASSOCIATES
320 FORTALEZA STREET 2nd FLOOR SAN JUAN, PUERTO RICO 00902 TELS. 721–4545 721–4546
ENGINEERS • ARCHITECTS • PLANNERS

SHEET TITLE:
PROPOSED FINISHES SCHEDULES
NOTES AND DETAILS
SCALE: AS SHOWN

CODE NO:
08–903–

DRAWING NO:
A–18

DATE	REVISIONS

SHEET NO:
29
OF
00

N:\Arch\Archivos de Trabajo\08-903 PLAZA ARECIBO\Dibujos\Arquitectura\A-18 FINISHES SCHEDULES.dwg July 16, 2024

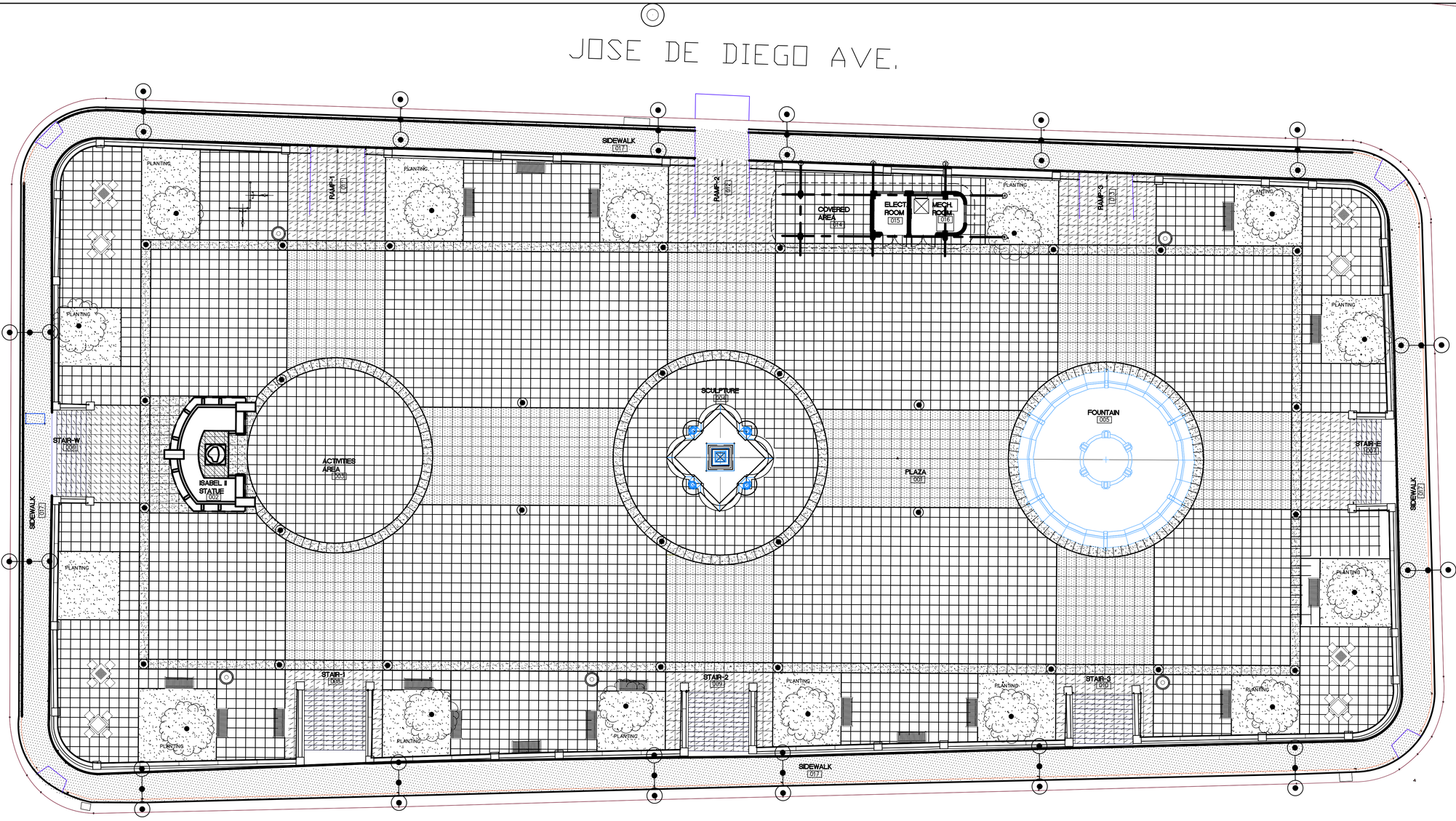

PROPOSED FLOOR TILES LAYOUT

SCALE: 3/32"=1'-0"

NORTH

PATTERN LEGEND

- 24" X 24" FLOOR TILES MO. _____ DIGNITARY (XTERIORS PAVER TEXTURED) BY DALTILE COLOR: TO BE SELECT BY ARCHITECT
- 24" X 24" FLOOR TILES MO. _____ DIGNITARY (XTERIORS PAVER TEXTURED) BY DALTILE COLOR: TO BE SELECT BY ARCHITECT
- 24" X 24" FLOOR TILES MO. _____ DIGNITARY (XTERIORS PAVER TEXTURED) BY DALTILE COLOR: TO BE SELECT BY ARCHITECT
- 24" X 24" FLOOR TILES AND STAIR FLOOR TILES MO. _____ DIGNITARY (XTERIORS PAVER TEXTURED) BY DALTILE COLOR: TO BE SELECT BY ARCHITECT
- MARBLE TILES COLOR: VARIES SEE SHEET A-6 FOR COLORS AND DETA
- EXPOSED CONCRETE AREAS
- PLANTING AREAS
- RESTORED EXISTING FLOOR SIDEWALK AROUND PLAZA

NOTE:

1. TILES JOINT AS MANUFACTURED TILE (MINIMUM SPACE) RECOMMENDED.
2. TILE JOINT COLOR TO BE SELECT BY ARCHITECT.

REVITALIZATION OF
LUIS MUÑOZ RIVERA PLAZA
IN THE URBAN CENTER
ARECIBO, PUERTO RICO

IGLESIAS•VAZQUEZ and ASSOCIATES
320 FORTALEZA STREET 2nd FLOOR SAN JUAN, PUERTO RICO 00902 TELS. 721-4545 721-4546
ENGINEERS • ARCHITECTS • PLANNERS

SHEET TITLE: PROPOSED FLOOR TILES LAYOUT
SCALE: AS SHOWN

CODE NO: 08-903-

DRAWING NO: A-19

DATE	REVISIONS

SHEET NO: 30 OF 00

N:\Proj\ARECIBO\903 PLAZA ARECIBO\DWG'S\030-903A-19.dwg

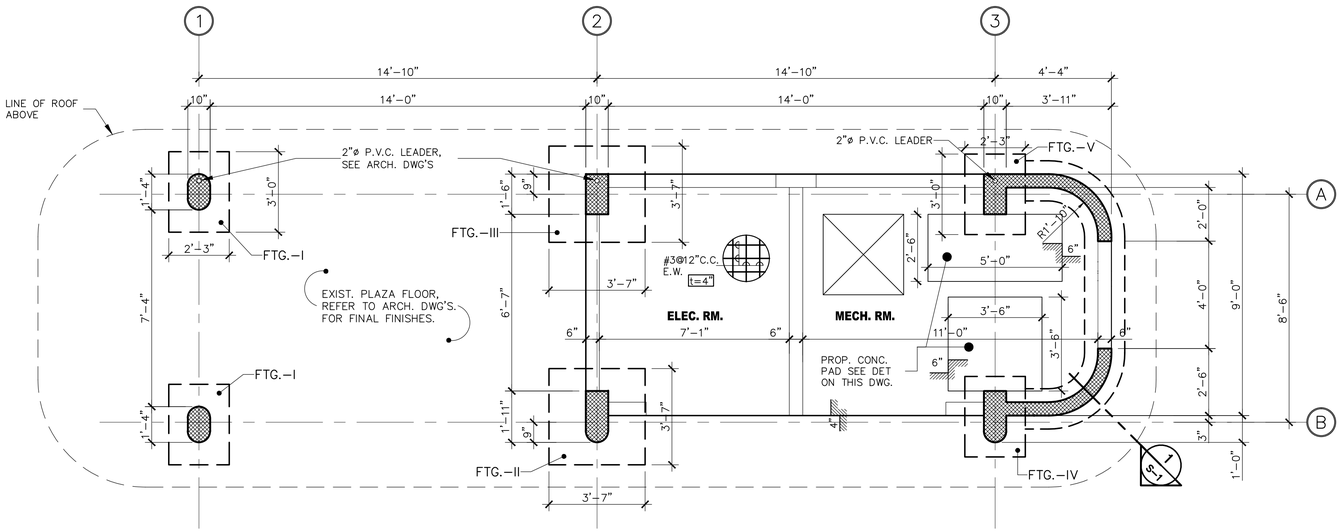

PROPOSED ELECTRICAL AND MECHANICAL BLDG. FOUNDATION PLAN

SCALE: 3/8"=1'-0"

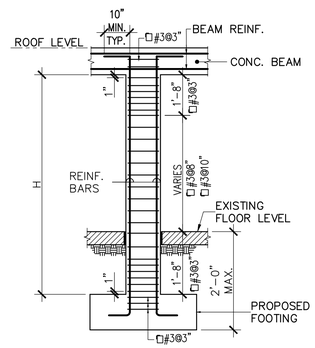

TYPICAL TRANSVERSE REINFORCEMENT LAYOUT IN COLUMNS

SCALE: 1/4"=1'-0"

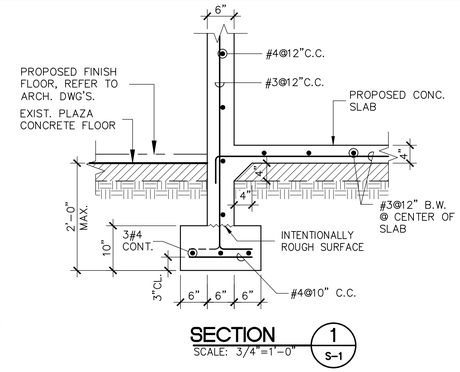

SECTION 1 / S-1

SCALE: 3/4"=1'-0"

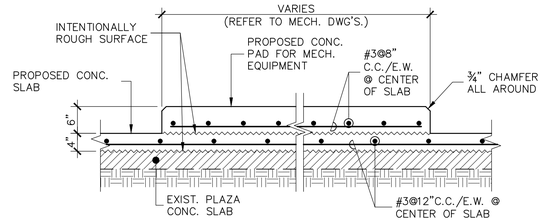

TYP. CONCRETE PAD DETAIL

SCALE: 3/4"=1'-0"

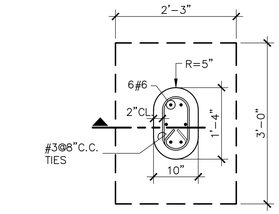

PLAN

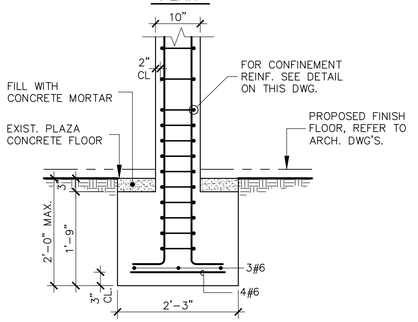

SECTION

FOOTING - I DETAIL

SCALE: 3/4"=1'-0"

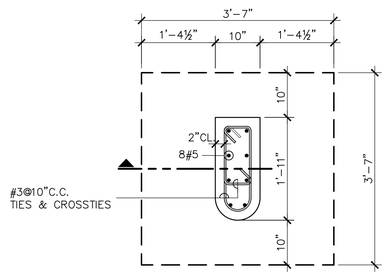

PLAN

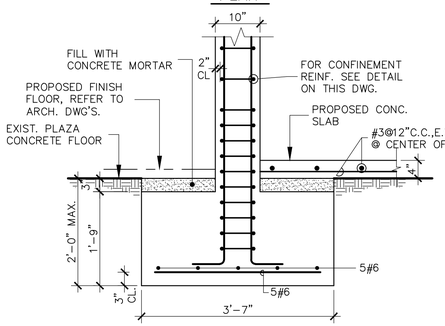

SECTION

FOOTING - II DETAIL

SCALE: 3/4"=1'-0"

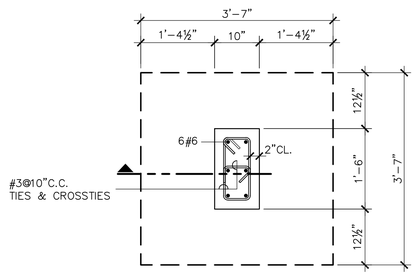

PLAN

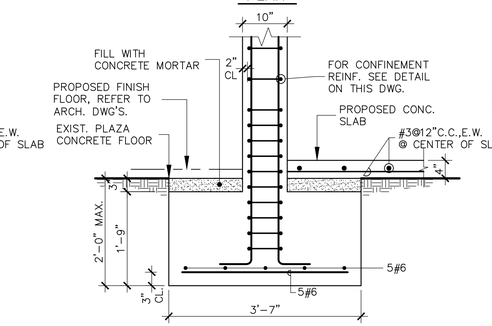

SECTION

FOOTING - III DETAIL

SCALE: 3/4"=1'-0"

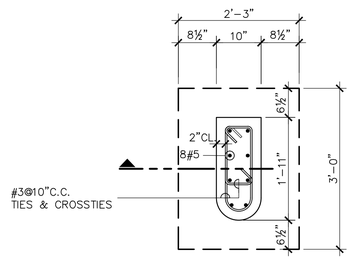

PLAN

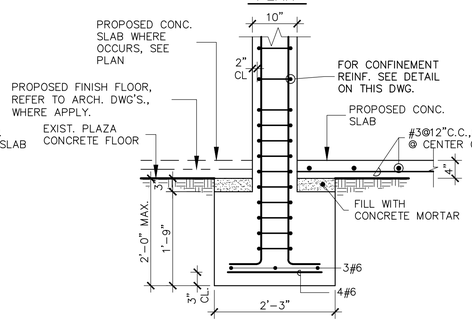

SECTION

FOOTING - IV DETAIL

SCALE: 3/4"=1'-0"

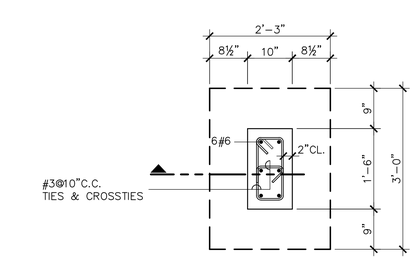

PLAN

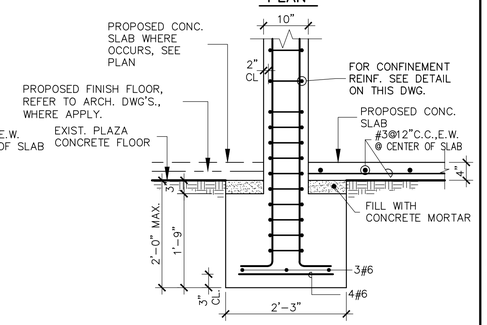

SECTION

FOOTING - V DETAIL

SCALE: 3/4"=1'-0"

IGLESIAS•VAZQUEZ and ASSOCIATES
320 FORTALEZA STREET 2nd FLOOR SAN JUAN, PUERTO RICO 00902 TELS. 721-4545 721-4546
ENGINEERS • ARCHITECTS • PLANNERS

REVITALIZATION OF
LUIS MUÑOZ RIVERA PLAZA
IN THE URBAN CENTER
ARECIBO, PUERTO RICO

SHEET TITLE:
PROPOSED ELECTRICAL AND MECHANICAL BLDG. FOUNDATION PLAN AND DETAILS
SCALE: AS SHOWN

CODE NO:
08-903-

DRAWING NO:
S-1

DATE	REVISIONS

SHEET NO:
OF
00

N:\Pro\ARECIBO\903 PLAZA ARECIBO\DWG'S\031-903S-1.dwg

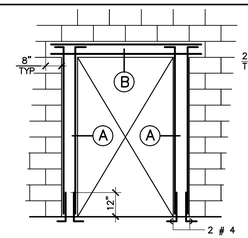

AT BLOCK WALL

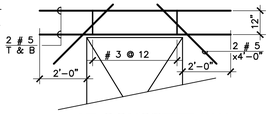

AT CONCRETE WALL

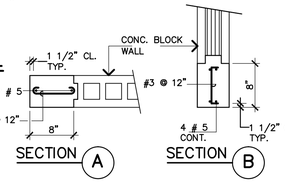

TYPICAL DOOR OPENING DETAIL
NOT TO SCALE

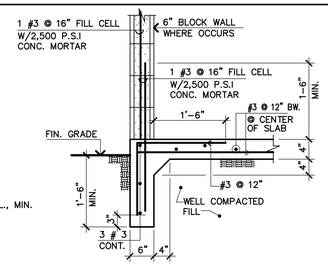

TYPICAL END CONDITION SECTION
N.T.S.

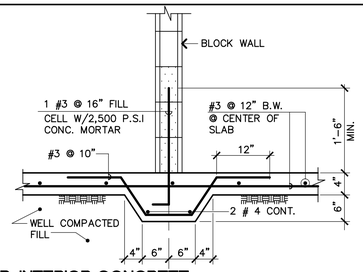

TYP. INTERIOR CONCRETE BLOCK WALL FOOTING SECTION
SCALE: 3/4"=1'-0"
NOTE:
LOCATE CENTROID OF REINFORCING AT MID OF SLAB DEPTH.

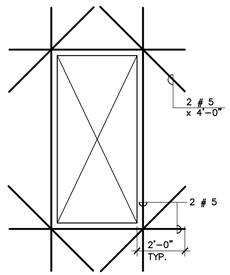

CONCRETE WALL TYP. OPENING DETAIL
SCALE: 3/8"=1'-0"

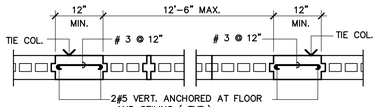

TYP. BLOCK WALL TIE COLUMN DETAIL
NOTE: FOR WALLS WITH HEIGHT OF MORE THAN 10 FEET, USE TIE BEAM EVERY 10 FEET

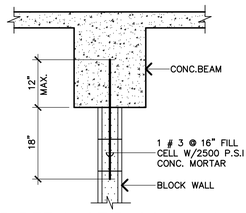

TYP. DETAIL OF BLOCK WALL ANCHORAGE TO BEAM
MINIMUM OF 8" IF 8". ARE NOT AVAILABLE
ANCHOR & INSERT HOOK WITH 180 HOOK

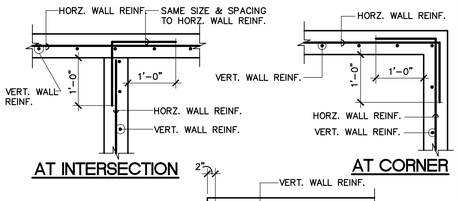

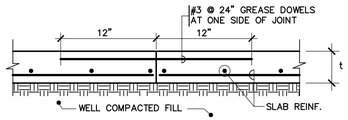

TYP. CONSTRUCTION JOINT DETAIL
N.T.S.

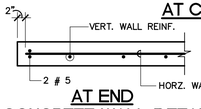

AT END

TYPICAL REINF. CONCRETE WALL DETAILS
N.T.S.

DESIGN DATA .....

1. LIVE LOADS:
   ROOF.....40 P.S.F.
   STAIRS AND PUBLIC CORRIDORS.....100 P.S.F.
   FLOOR .....100 P.S.F.
2. LATERAL LOADS
   WIND LOADS:
   A. BASIC WIND SPEED.....145 MPH
   B. IMPORTANCE FACTOR.....1.0
   C. EXPOSURE CLASSIFICATION.....D
   D. CATEGORY.....II
3. SEISMIC LOAD: ASCE 7–05
   A. OCCUPANCY CATEGORY.....III
   B. MAPPED S.R.A. = Sa.....98 g%
   C. MAPPED S.R.A. = S1.....39 g%
   D. SITE CLASSIFICATION.....D
   E. IMPORTANCE FACTOR.....1.00
4. STRESSES:
   SEE NOTES 1, 2 AND 3 OF GENERAL NOTES.
5. APPLICABLE CODES AND SPECIFICATIONS:
   A– 2018 PUERTO RICO BUILDING CODE
   B– AMERICAN CONCRETE INSTITUTE, ACI–318–19
   C– AMERICAN INSTITUTE OF STEEL CONSTRUCTION, A.I.S.C., 14TH. EDITION
   D– AMERICAN WELDING SOCIETY.
   E– ASCE 7–2005 CODE
   F– ALL OTHER CODES REFERRED BY THE ABOVE MENTIONED CODES.
   G– STEEL DECK SPECK. (ANSI RD–2010)

DOWELS & LAP SPLICES SCHEDULE FOR WALLS & COLUMNS (COMPRESSION FOR GRADE–60 BARS)

BAR SIZES	LENGTH OF DOWELS 22db (INCHES)	LENGTH OF SPLICE (INCHES)
# 3 (# 10) *	9	16
# 4 (# 13)	12	16
# 5 (# 16)	14	20
# 6 (# 19)	18	24
# 7 (# 22)	20	30
# 8 (# 25)	24	30
# 9 (# 29)	26	34
# 10 (# 32)	28	38
# 11 (# 36)	31	42

NOTE: EXCEPT OTHERWISE NOTED LENGTH SHOWN IS MEASURED FROM TOP OF FOOTING ELEVATION.
*(# 10) –– SOFT METRIC BAR SIZE DESIGNATION

GENERAL STRUCTURAL NOTES

1. ALL STRUCTURAL CONCRETE HAS BEEN DESIGNED BY THE ULTIMATE STRENGTH METHOD AND FOR THE FOLLOWING STRENGTH CAPACITIES AT 28 DAYS.
   FOOTINGS : 4,000 P.S.I.
   COLUMNS AND SHEAR WALLS : 4,000 P.S.I.
   BASEMENT WALLS : 4,000 P.S.I.
   BEAMS AND SLABS : 4,000 P.S.I.
   SLABS ON GRADE : 3,000 P.S.I.
   MAXIMUM WATER CEMENT RATIO = 0.40
   * THE CONTRACTOR SHALL BUY WITH EXCLUSIVITY CHARACTER PRODUCTS MANUFACTURED IN PUERTO RICO ACCORDING TO PREFERENCE LAWS # 42 AND # 109
2. ALL REINFORCING STEEL SHALL HAVE A MINIMUM YIELD POINT OF 60,000 P.S.I. AND SHALL CONFORM WITH ALL APPLICABLE A.S.T.M. AND A.C.I. SPECIFICATIONS.
3. ALL STRUCTURAL STEEL SHALL CONFORM WITH ALL APPLICABLE A.S.T.M. AND A.I.S.C. SPECIFICATIONS AND SHALL HAVE A MINIMUM YIELD POINT OF 36,000 P.S.I., EXCEPT WHERE OTHERWISE SHOWN OR NOTED ELSEWHERE.
4. ALL WELDING SHALL BE MADE IN STRICT ACCORDANCE WITH THE SPECIFICATIONS OF THE AMERICAN WELDING SOCIETY AND ALL APPLICABLE A.C.I. SPECIFICATIONS.
5. LAP SPLICES SHALL CONFORM TO ACI–318–19 SPECIFICATIONS, AND UNLESS OTHER – WISE DRAWN OR NOTED ELSEWHERE THE MINIMUM SPLICE SHALL NOT BE LESS OF 38 BAR DIAMETER.
6. DOWELS SHALL BE EQUAL IN SIZE AND NUMBER TO VERTICAL REINFORCEMENT WITH A MINIMUM EMBEDMENT OF 24 BAR DIAMETERS INTO FOOTING AND PROJECTING 38 BAR DIAMETERS ABOVE IT UNLESS OTHERWISE SHOWN OR NOTED ELSEWHERE.
7. TEMPERATURE REINFORCEMENT SHALL BE PROVIDED IN ALL ONE WAY SLABS PERPENDICULAR TO THE MAIN REINFORCEMENT ACCORDING TO THE FOLLOWING TABLE:

SLAB THICKNESS	REINFORCEMENT
3"	#3 SPACED 12" C/C
4"	#3 SPACED 12" C/C
5"	#3 SPACED 12" C/C
6"	#3 SPACED 10" C/C
7"	#3 SPACED 9" C/C
8"	#3 SPACED 8" C/C
9"	#4 SPACED 12" C/C
10"	#4 SPACED 11" C/C

   AN ALTERNATE USING WELDED WIRE FABRIC PROVIDING THE SAME STEEL AREA CAN BE USED.
8. UNLESS OTHERWISE SHOWN OR NOTED ELSEWHERE, CONCRETE WALLS SHALL BE REINFORCED AS FOLLOWS:

THICKNESS	VERTICAL REINF.	HORIZONTAL REINF.
4"	#3 SPACED 12" C/C	#3 SPACED 12" C/C
6"	#3 SPACED 12" C/C	#4 SPACED 12" C/C
8"	#3 SPACED 9" C/C	#4 SPACED 10" C/C

9. CONCRETE PROTECTION FOR REINFORCING BARS SHALL BE AS FOLLOWS UNLESS OTHER– WISE SHOWN OR NOTED.
   FOOTINGS BOTTOM ..... 3"
   FOOTINGS TOP & SIDES ..... 2½"
   WALLS, SLABS AND JOINTS (NOT EXPOSED TO WEATHER) ..... 1"
   (EXPOSED TO WEATHER) ..... 1½"
   COLUMNS AND BEAMS ..... 2"
   BASEMENT WALLS.....2"
10. ALL SLABS AND BEAMS SHALL HAVE NO HORIZONTAL JOINT. ANY STOP IN CONCRETE WORK MUST BE MADE AT CENTER OF SPAN WITH VERTICAL BULKHEADS.
11. FOR CONCRETE FORM WORK, SURFACE FINISHING, BEVELED CORNERS AND DRIPS, SEE ARCHITECTURAL PLANS.
12. NOTE AND DETAILS ON DRAWINGS SHALL TAKE PRECEDENCE OVER GENERAL NOTES AND TYPICAL DETAILS.
13. CONTRACTOR SHALL VERIFY ALL DIMENSIONS AND EXISTING FIELD CONDITIONS PRIOR TO STARTING CONSTRUCTION. IF ANY DISCREPANCY ARISES IN THE STRUCTURAL PLANS OR BETWEEN STRUCTURAL AND ARCHITECTURAL PLANS, THE STRUCTURAL ENGINEER SHALL BE NOTIFIED IMMEDIATELY.
14. CONTRACTOR SHALL PROVIDE, SET AND VERIFY DIMENSIONS AND LOCATION OF ALL ANCHORS, INSERTS, BOLTS, SLEEVES, CONDUITS, ETC., SHOWN OR NOTED IN ARCHITECTURAL AND/OR MECHANICAL AND PLUMBING PLANS. ANY DETRIMENTAL INTERFERENCE BETWEEN ANY OF THESE ITEMS AND THE STRUCTURAL ELEMENTS SHALL BE BROUGHT TO THE ATTENTION OF THE STRUCTURAL ENGINEER.
15. PROVISIONS FOR DETAILS NOT SPECIFICALLY DRAWN SHALL BE MADE BY THE CONTRACTOR IN ACCORDANCE WITH THE ACI–318–19 AND/OR CLARIFIED WITH THE DESIGNER.
16. HORIZONTAL MOVEMENT OF ANY HEAVY EQUIPMENT OVER STRUCTURAL FLOORS OR ROOF AND ITS TEMPORARY AND/OR DEFINITE LOCATIONS MUST BE PREVIOUSLY APPROVED BY THE DESIGNER SO AS NOT TO OVERLOAD THE STRUCTURE OR IN ANY OTHER WAY IMPAIR THE STRUCTURE. SAME PRECAUTIONS SHALL BE TAKEN FOR THE PILING OF CONSTRUCTION MATERIALS.
17. THE CONTRACTOR SHALL TAKE PRECAUTIONS TO PRODUCE CORRECTLY ALIGNED CONCRETE, CONSIDERING AMONG OTHER THINGS THE ELASTIC DEFORMATION OF THE STRUCTURE MEMBERS.
18. ALL TESTS FOR PROPERTIES OF CONCRETE AGGREGATES, CEMENT, CONCRETE STRENGTH BY CYLINDERS, SLUMP TESTS AND VIBRATION OF CONCRETE AND OTHER TESTS REQUIRED FOR CONCRETE IN THE SPECIFICATIONS SHALL BE PERFORMED UNDER THE SUPERVISION OF A CERTIFIED TESTING LABORATORY TO BE APPROVED BY THE ENGINEERS.
19. POURING OF CONCRETE SHALL NOT BE STARTED UNTIL STEEL HAS BEEN PLACED AND APPROVED BY THE ENGINEER OR HIS AUTHORIZED REPRESENTATIVE.
20. PROVIDE CAMBER ON SLABS AND BEAMS AS PER ENGINEER'S INSTRUCTIONS.
21. STRUCTURAL DRAWINGS ARE INTENDED TO BE USED WITH ARCHITECTURAL, ELECTRICAL AND MECHANICAL DRAWINGS. CONTRACTOR IS RESPONSIBLE FOR COORDINATING SUCH REQUIREMENTS INTO THEIR SHOP DRAWINGS AND WORK.
22. NO OPENINGS, OTHER THAN THOSE SHOWN ON THE STRUCTURAL DRAWINGS, SHALL BE MADE IN ANY STRUCTURAL MEMBER WITHOUT THE WRITTEN APPROVAL OF THE STRUCTURAL ENGINEER.
23. IN CASE OF DOUBT IN THE INTERPRETATION OF ANY ASPECT OF THESE STRUCTURAL DRAWINGS AND/OR SPECIFICATIONS, THE DESIGNER SHALL BE CONSULTED.
24. ALL INTERIOR AND EXTERIOR BLOCK WALLS SHALL BE REINFORCED WITH DUR–O–WALL TRUSS OR APPROVED MATERIAL HAVING EQUAL EFFECTIVE AREA OF STEEL, MORTAR BOND, AND APPLICABLE BUILDING CODE APPROVAL. MATERIAL SHALL BE MANUFACTURED FROM UNCOATED NO. 9 GAGE WIRE CONFORMING TO THE REQUIREMENTS OF ASTM A82 OR SIMILAR.
25. FOR TWO WAY SLAB #6 AT 9" SPECIAL REINFORCEMENT SHALL BE PROVIDED AT EXTERIOR CORNERS IN BOTH BOTTOM AND TOP OF THE SLAB, FOR A DISTANCE IN EACH DIRECTION FROM THE CORNER EQUAL TO 5 FT. THE REINFORCEMENT IN THE TOP OF THE SLAB SHALL BE PARALLEL TO THE DIAGONAL FROM THE CORNER OF THE REINFORCEMENT IN THE BOTTOM OF THE SLAB SHALL BE AT RIGHT ANGLES TO THE DIAGONAL.
26. IN THE CASE OF 6" AND 8" WALLS SUPPORTING BEAMS OR CONCENTRATED LOADS, THE EFFECTIVE LENGTH OF THE WALLS SHALL BE REINFORCED WITH #5 AT 9" BOTH FACES (VERTICAL REINFORCEMENT). THE LENGTH OF THE WALL TO BE CONSIDERED AS EFFECTIVE SHALL BE THE WIDTH OF THE BEARING PLUS 4 TIMES THE WALL THICKNESS.
27. ONE QUARTER OF THE LARGE AMOUNT OF THE TOP TENSION REINFORCEMENT REQUIRED AT EITHER END OF THE BEAM SHALL BE CONTINUOUS THROUGHOUT THE TOP OF THE BEAM OR GIRDER.
28. SHOP DRAWINGS SHALL BE SUBMITTED BY THE CONTRACTOR TO THE STRUCTURAL DESIGNER FOR FINAL APPROVAL.

MASONRY.....

1. MINIMUM COMPRESSIVE STRENGTH OF MASONRY (F'M) ESTABLISHED IN ACCORDANCE WITH THE UNIT STRENGTH METHOD SHALL BE 1,500 PSI.
2. MASONRY UNITS SHALL HAVE A NET AREA COMPRESSIVE STRENGTH OF 1,900 PSI.
3. MORTAR SHALL BE TYPE "S" MORTAR. MASONRY CEMENT SHALL NOT BE USED FOR MORTAR.
4. GROUT SHALL HAVE A MINIMUM COMPRESSIVE STRENGTH OF 2,500 PSI AT 28 DAYS.
5. SOLID GROUT ALL CELLS THAT CONTAIN VERTICAL REINFORCING, TYP.

FOUNDATION.....

1. FOUNDATION HAS BEEN DESIGNED FOLLOWING THE RECOMMENDATIONS OF GEO CIM, INC., SOIL CONSULTING ENGINEERS. SAID RECOMMENDATIONS AND SOIL REPORT MADE BY THE ABOVE MENTIONED ENGINEER, ARE MADE PART OF THIS PART PLAN AND SPECIFICATIONS.
2. FOOTING DESIGN ARE BASED ON A NET ALLOWABLE SOIL BEARING PLESURE OF 2,500 P.S.I., REFER TO SOIL REPORT.
3. ALL FILL SHALL BE COMPACTED TO 90% OF MODIFIED PROCTOR TEST (MPT) (ASTM D–1557)
4. WHEN POURING CONCRETE FOR FOUNDATIONS, THERE SHOULD BE NO WATER IN THE EXCAVATION TRENCH.

MATERIALS.....

1. THE FOLLOWING SPECIFICATIONS APPLY TO THE STRUCTURAL STEEL WORK:
   A) ROLLED SHAPES, PLATES AND BARS.....ASTM A–36
   B) STEEL PIPES, GRADE B .....ASTM A–53
   C) HIGH STRENGTH BOLTS .....ASTM A–325
   D) HOLLOW STRUTURAL SECTIONS, GRADE B.....ASTM A–500
   E) WELD FILLER MATERIAL, E70XX ELECTRODES.....ASTM A–223
   F) ANCHOR BOLTS.....ASTM A–325
2. THE FOLLOWING SPECIFICATIONS APPLY TO THE STRUCTURAL CONCRETE WORK:
   A) READY– MIXED CONCRETE.....ASTM C–94
   B) REINFORCE STEEL, GRADE 60.....ASTM A–615
3. THE FOLLOWING SPECIFICATIONS APPLY TO THE MASONRY WORK:
   A) HOLLOW CONCRETE MASONRY UNITS.....ASTM C–90
   B) MORTAR (TYPE M).....ASTM C–270
   C) MOSONRY GROUT.....ASTM C–476
   D) COLD DRAWN WIRE.....ASTM A–82
   G) STEEL DECK.....AST A–792

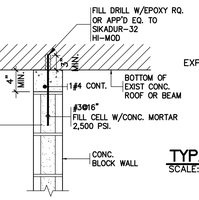

ORNAMENTAL CONC. BLOCKS TYP. ANCHORAGE DETAIL
N.T.S.

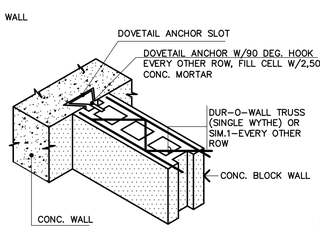

TYP. BLOCK WALL TO CONCRETE WALL ANCHORAGE DETAIL
N.T.S.

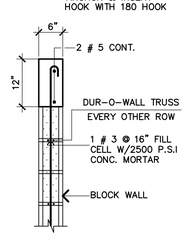

TYPICAL BLOCK WALL END CONDITION TIE BEAM DETAIL
N.T.S.

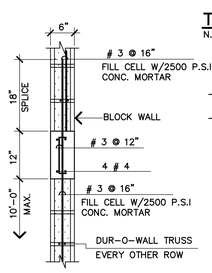

TYPICAL BLOCK WALL CONTINUOUS CONDITION TIE BEAM DETAIL
N.T.S.

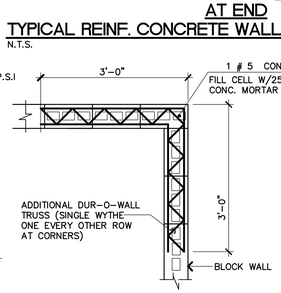

ADD. REINF FOR BLOCK WALL CORNER DETAIL
N.T.S.

TYP. DRILL FOR ANCHOR BOLTS
SCALE: NOT TO SCALE

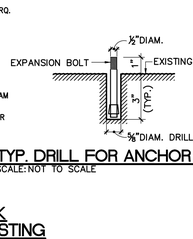

TYPICAL DETAIL OF BLOCK WALL ANCHORAGE TO EXISTING CONCRETE ROOF OR BEAM
N.T.S.

TYPICAL ANCHOR BAR FOR NEW TO EXISTING CONSTRUCTION

ADD. REINF. FOR BLOCK WALL INTERSECTION DETAIL
N.T.S.

TYPICAL 90° HOOK MINIMUM EMBEDMENT LENGTH FOR GRADE 60 REINFORCING BARS

BARS	f'c=3,000 A (in.)	f'c=3,000 B (in.)	f'c=4,000 A (in.)	f'c=4,000 B (in.)	f'c=5,000 A (in.)	f'c=5,000 B (in.)
# 3	10	6	9	6	8	6
# 4	13	8	11	8	10	8
# 5	16	10	14	10	13	10
# 6	20	12	17	12	15	12
# 7	23	14	20	14	18	14
# 8	26	16	23	16	20	16
# 9	30"	19	26	19	23	19
# 10	33	22	29	22	26	22
# 11	37	24	32	24	29	24

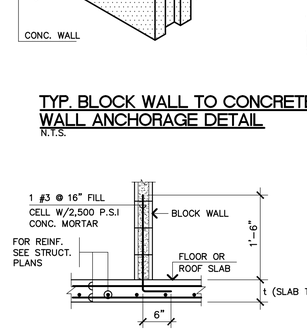

CONTROL JOINT DETAIL
MAKE SAW CUTS FOR CONTROL JOINT WITHIN 4 TO 12 HOURS AFTER THE CONCRETE HARDENS

CONSTRUCTION JOINT DET.
N.T.S.

BLOCK WALL TO STRUCTURAL SLAB ANCHOR DETAIL
SCALE: 3/4"=1'–0"

DEVELOPMENT AND SPLICES LENGTH NOTES:

1. TABULATED VALUES ARE BASED ON GRADE 60 REINFORCING BARS AND NORMAL CONCRETE. LENGTHS ARE IN INCHES.
2. TENSION DEVELOPMENT LENGTHS AND TENSION LAP SPLICE LENGTHS ARE CALCULATED PER ACI–318–19, SECTION 25.4 AND 25.5 RESPECTIVELY.
3. LAP SPLICE LENGTHS ARE MULTIPLES OF TENSION DEVELOPMENT LENGTHS; CLASS A= 1.0 Ld AND CLASS B=1.3 Ld (ACI 318–19, SECTION 25.5)
4. BAR C.–C. SPACING WAS ASSUMED TO BE GREATER THAN TWICE THE CONCRETE COVER PLUS ONE BAR DIAMETER, SO THAT C WAS GOVERNED BY BY CONCRETE COVER RATHER THAN BY BAR SPACING.
5. BAR SIZES #14 AND #18 WERE INTENTIONALLY OMITTED FROM THIS TABLE.
6. TOP BARS ARE HORIZONTAL BARS WITH MORE THAN 12 IN. OF CONCRETE CAST BELOW THE BARS.
7. FOR LIGHTWEIGHT AGGREGATE CONCRETE, MULTIPLY THE TABULATED VALUES BY 1.3.
8. USE CLASS–A FOR TENSION DEVELOPMENT LENGTH & CLASS–B FOR LAP SPLICE.

TENSION DEVELOPMENT AND LAP SPLICE LENGTHS FOR BARS IN WALLS AND SLABS FOR GRADE 60 BARS (fy=60,000psi., f'c=3,000 p.s.i.)

BAR SIZE	LAP CLASS	CONCRETE COVER=1.00 in. TOP	CONCRETE COVER=1.00 in. OTHER	CONCRETE COVER=1.50 in. TOP	CONCRETE COVER=1.50 in. OTHER	CONCRETE COVER=2.00 in. TOP	CONCRETE COVER=2.00 in. OTHER
#3	A	13	12	13	12	13	12
	B	17	16	17	16	17	16
#4	A	17	13	17	13	17	13
	B	23	17	23	17	23	17
#5	A	26	20	22	17	22	17
	B	33	26	28	22	28	22
#6	A	35	27	26	20	26	20
	B	46	35	34	26	34	26
#7	A	57	44	43	33	38	29
	B	74	57	55	43	49	38
#8	A	72	55	54	41	43	33
	B	93	72	70	54	56	43
#9	A	87	67	66	51	53	41
	B	113	87	86	66	69	53
#10	A	106	81	81	62	66	51
	B	137	106	105	81	85	66
#11	A	125	96	97	74	79	61
	B	162	125	125	97	102	79

ALL MEASUREMENTS IN INCHES

TENSION DEVELOPMENT AND LAP SPLICE LENGTHS FOR BARS IN WALLS AND SLABS FOR GRADE 60 BARS (fy=60,000psi., f'c=4,000 p.s.i.)

BAR SIZE	LAP CLASS	CONCRETE COVER=1.00 in. TOP	CONCRETE COVER=1.00 in. OTHER	CONCRETE COVER=1.50 in. TOP	CONCRETE COVER=1.50 in. OTHER	CONCRETE COVER=2.00 in. TOP	CONCRETE COVER=2.00 in. OTHER
#3	A	12	12	12	12	12	12
	B	16	16	16	16	16	16
#4	A	15	12	15	12	15	12
	B	20	16	20	16	20	16
#5	A	22	17	19	15	19	15
	B	29	22	24	19	24	19
#6	A	31	24	22	17	22	17
	B	40	31	29	22	29	22
#7	A	50	38	37	28	33	25
	B	64	50	48	37	42	33
#8	A	62	48	47	36	37	29
	B	80	62	60	47	48	37
#9	A	76	58	57	44	46	36
	B	98	76	74	57	60	46
#10	A	92	70	70	54	57	44
	B	119	92	91	70	74	57
#11	A	108	83	84	64	68	53
	B	141	108	109	84	89	68

ALL MEASUREMENTS IN INCHES

TENSION DEVELOPMENT AND LAP SPLICE LENGTHS FOR BARS IN WALLS AND SLABS FOR GRADE 60 BARS (fy=60,000psi., f'c=5,000 p.s.i.)

BAR SIZE	LAP CLASS	CONCRETE COVER=1.00 in. TOP	CONCRETE COVER=1.00 in. OTHER	CONCRETE COVER=1.50 in. TOP	CONCRETE COVER=1.50 in. OTHER	CONCRETE COVER=2.00 in. TOP	CONCRETE COVER=2.00 in. OTHER
#3	A	12	14	12	12	12	12
	B	16	19	16	16	16	16
#4	A	16	19	12	14	12	12
	B	21	25	16	18	16	16
#5	A	20	24	14	16	12	14
	B	26	32	18	21	16	18
#6	A	24	28	16	19	12	15
	B	32	37	21	25	16	20
#7	A	40	59	27	39	21	30
	B	52	77	35	51	27	39
#8	A	45	67	30	45	24	34
	B	59	87	39	59	31	44
#9	A	51	76	34	51	26	38
	B	66	99	44	66	34	49
#10	A	57	85	38	57	30	43
	B	74	111	50	74	39	56
#11	A	64	95	42	63	32	48
	B	83	124	55	82	42	62

ALL MEASUREMENTS IN INCHES

IGLESIAS•VAZQUEZ and ASSOCIATES
320 FORTALEZA STREET 2nd FLOOR SAN JUAN, PUERTO RICO 00902 TELS. 721–4545 721–4546
ENGINEERS • ARCHITECTS • PLANNERS

REVITALIZATION OF LUIS MUÑOZ RIVERA PLAZA IN THE URBAN CENTER ARECIBO, PUERTO RICO

SHEET TITLE: TYPICAL STRUCTURAL SECTIONS AND NOTES
SCALE: AS SHOWN

CODE NO: 08–903–

DRAWING NO: S–2

SHEET NO: OF 00

DATE	REVISIONS

N:\Proj\ARECIBO\903 PLAZA ARECIBO\DWG'S\33–90352.dwg

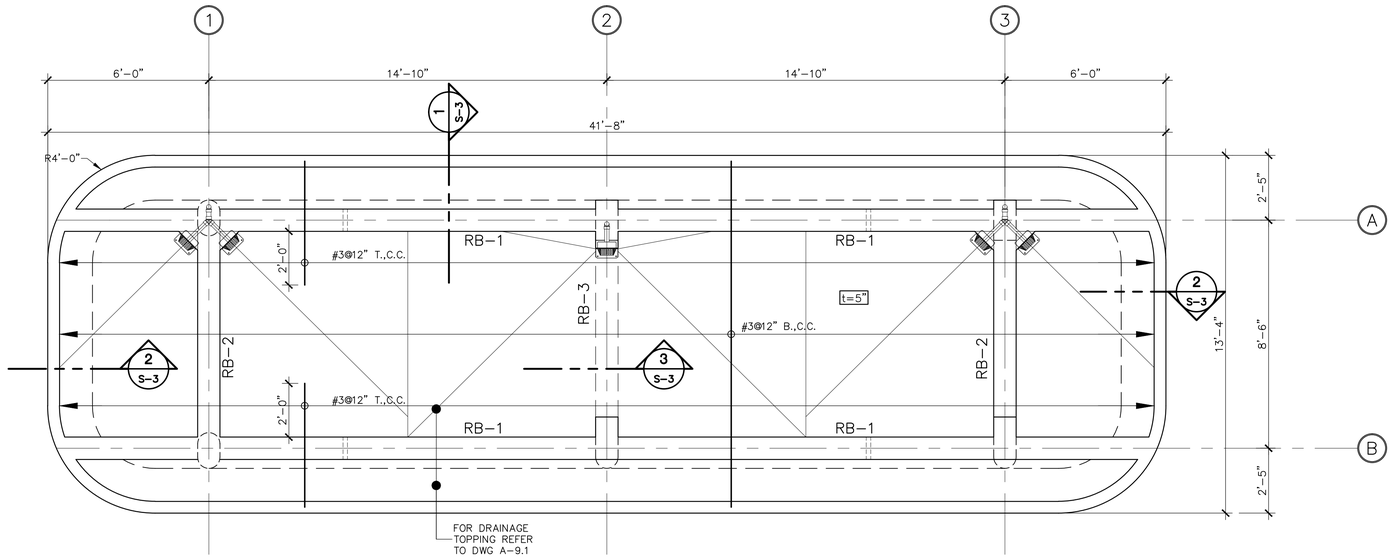

PROPOSED STRUCTURAL ROOF PLAN

SCALE: 3/8"=1'–0"

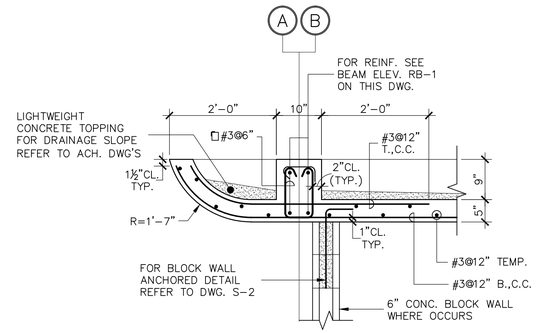

SECTION 1 / S-3

SCALE: 3/4"=1'–0"

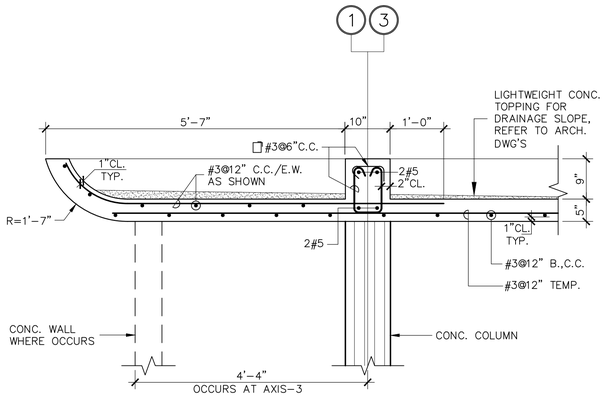

SECTION 2 / S-3

SCALE: 3/4"=1'–0"

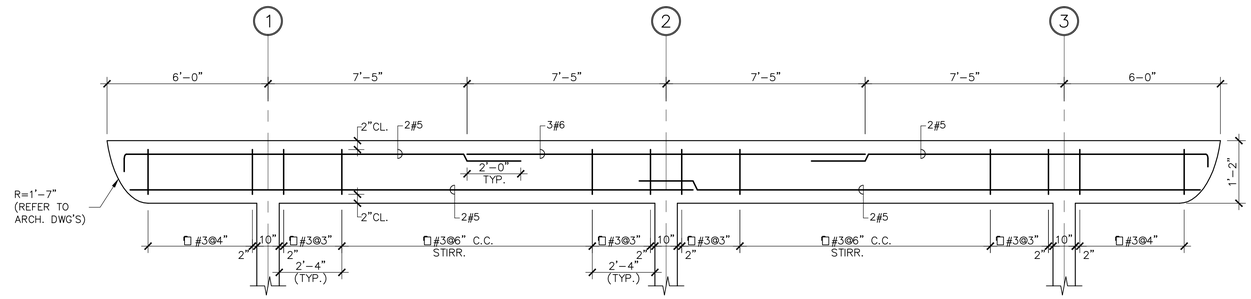

LONGITUDINAL REINF. BEAM ELEVATION FOR RB-1

SCALE: HORZ.=3/8"=1'–0"
VERT.=3/4"=1'–0"

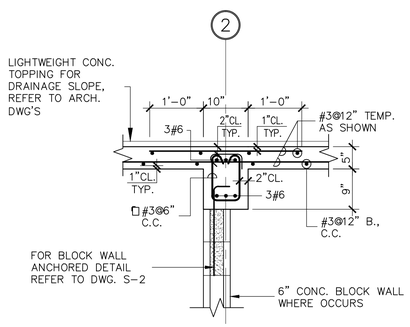

SECTION 3 / S-3

SCALE: 3/4"=1'–0"

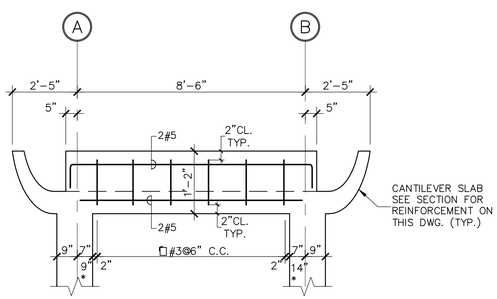

TRANSVERSAL REINF. BEAM ELEVATION FOR RB-2

SCALE: HORZ.=3/8"=1'–0"
VERT.=3/4"=1'–0"
* APPLY ONLY ON AXIS–3

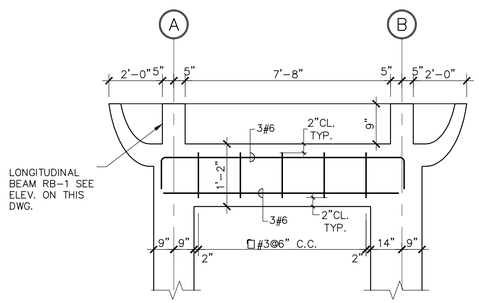

TRANSVERSAL REINF. BEAM ELEVATION FOR RB-3

SCALE: HORZ.=3/8"=1'–0"
VERT.=3/4"=1'–0"

REVITALIZATION OF
LUIS MUÑOZ RIVERA PLAZA
IN THE URBAN CENTER
ARECIBO, PUERTO RICO

IGLESIAS•VAZQUEZ and ASSOCIATES
320 FORTALEZA STREET 2nd FLOOR SAN JUAN, PUERTO RICO 00902 TELS. 721–4545 721–4546
ENGINEERS • ARCHITECTS • PLANNERS

SHEET TITLE:
PROPOSED ELETRICAL AND MECHANICAL BLDG. STRUCTURAL ROOF PLAN AND DETAILS
SCALE: AS SHOWN

CODE NO: 08-903-

DRAWING NO: S–3

DATE	REVISIONS

SHEET NO: OF 00

N:\Pro\ARECIBO\903 PLAZA ARECIBO\DWG'S\033-903S-3.dwg

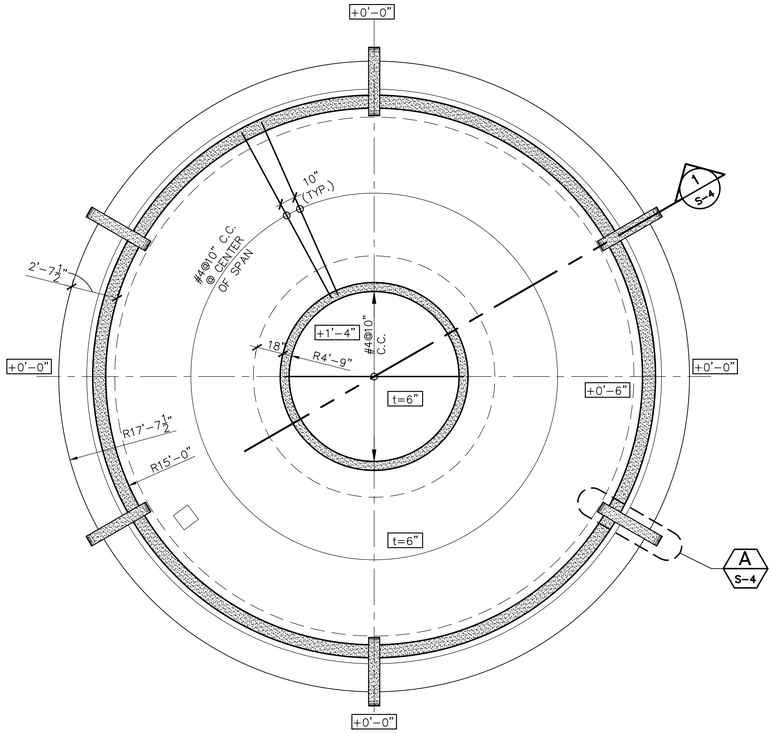

PROPOSED FOUNTAIN FOUNDATION PLAN

SCALE: 1/4"=1'-0"

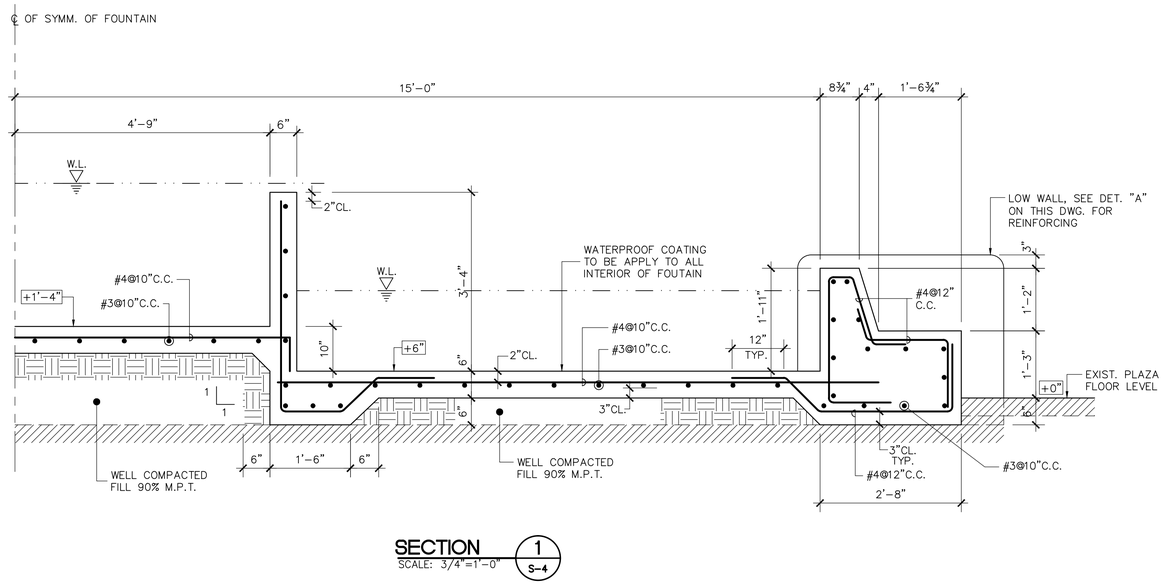

SECTION

SCALE: 3/4"=1'-0" (1 / S-4)

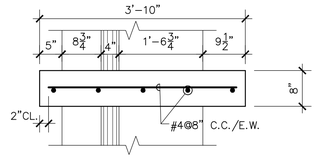

PLAN

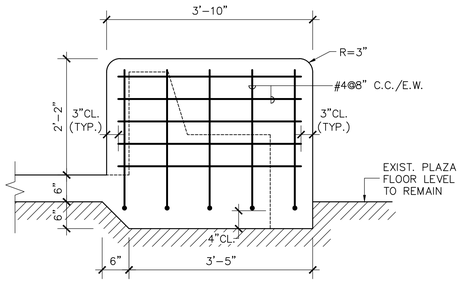

SECTION

DETAIL

SCALE: 1 1/2"=1'-0" (A / S-4)

N:\Proj\ARECIBO\903 PLAZA ARECIBO\DWG'S\034-903S-4.dwg

REVITALIZATION OF
LUIS MUÑOZ RIVERA PLAZA
IN THE URBAN CENTER
ARECIBO, PUERTO RICO

IGLESIAS • VAZQUEZ and ASSOCIATES
ENGINEERS • ARCHITECTS • PLANNERS
320 FORTALEZA STREET 2nd FLOOR SAN JUAN, PUERTO RICO 00902 TELS. 721-4545 721-4546

SHEET TITLE: PROPOSED FOUNTAIN FOUNDATION PLAN

SCALE: AS SHOWN

CODE NO: 08-903-

DRAWING NO: S-4

SHEET NO: OF 00

DATE	REVISIONS

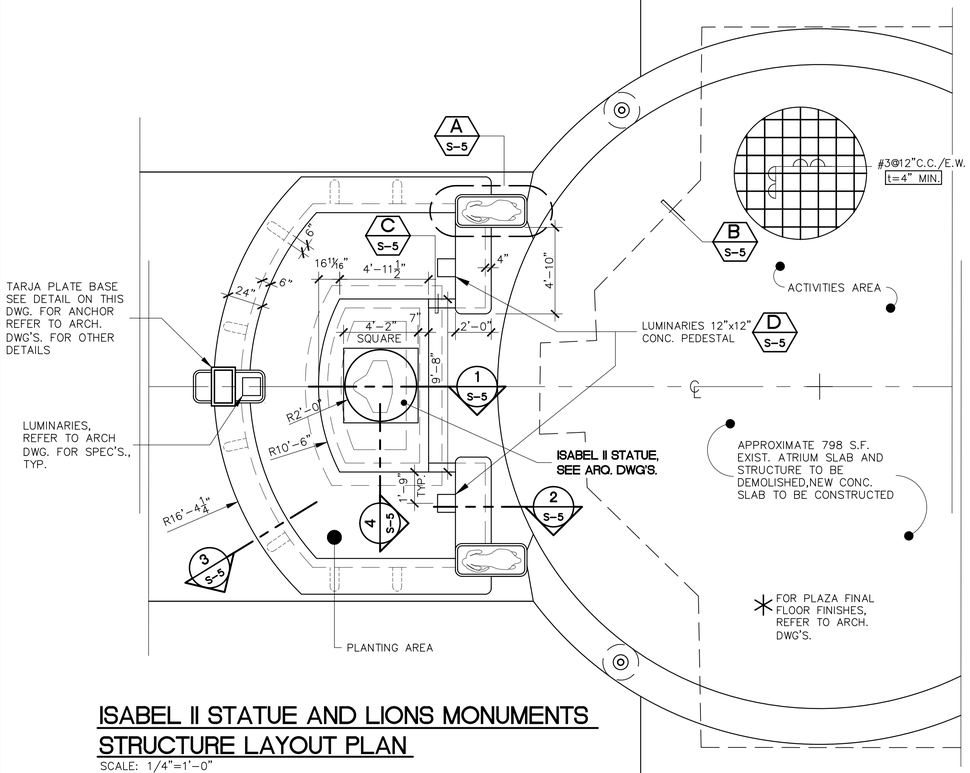

ISABEL II STATUE AND LIONS MONUMENTS STRUCTURE LAYOUT PLAN

SCALE: 1/4"=1'-0"

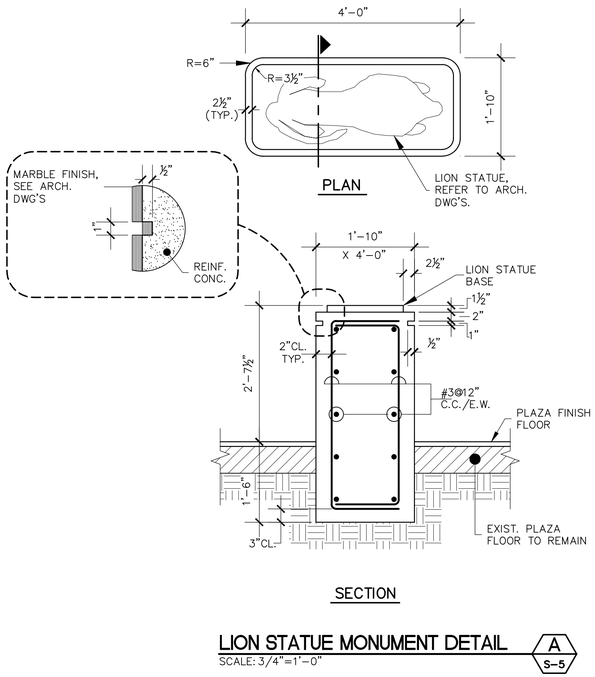

LION STATUE MONUMENT DETAIL (A S-5)

SCALE: 3/4"=1'-0"

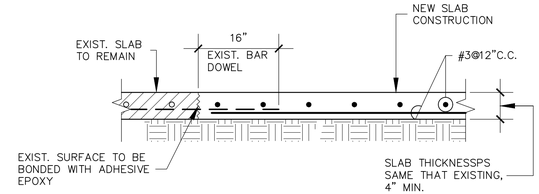

CONSTRUCTION JIONT FOR NEW EXISTNG SLAB (B S-5)

SCALE: 3/4"=1'-0"

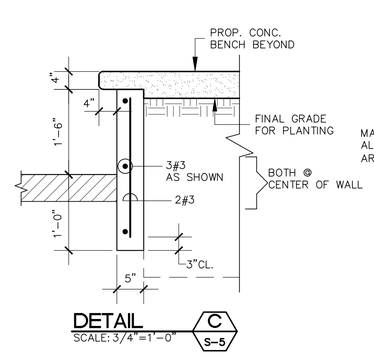

DETAIL (C S-5)

SCALE: 3/4"=1'-0"

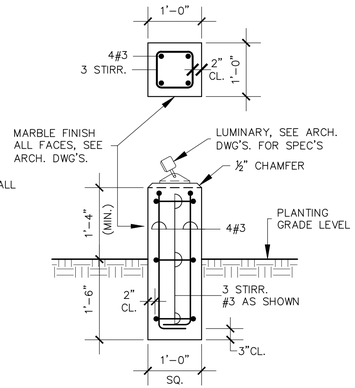

LUMINARIES CONC. BASE DETAIL (D S-5)

SCALE: 3/4"=1'-0"

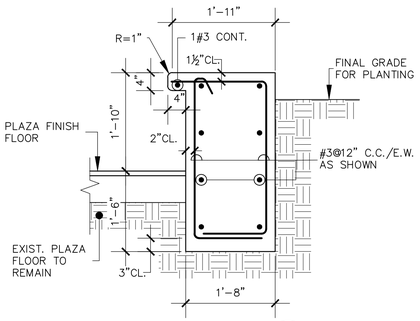

SECTION (2 S-5)

SCALE: 3/4"=1'-0"

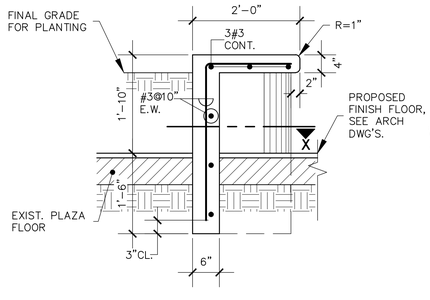

SECTION (3 S-5)

SCALE: 3/4"=1'-0"

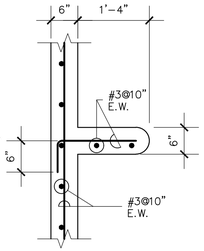

SECTION–X

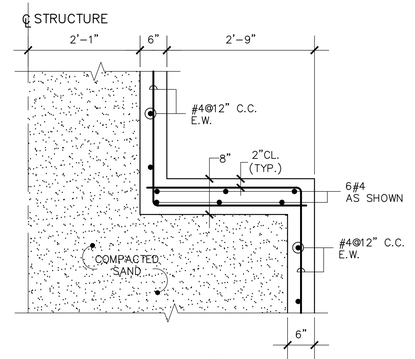

SECTION (4 S-5)

SCALE: 3/4"=1'-0"

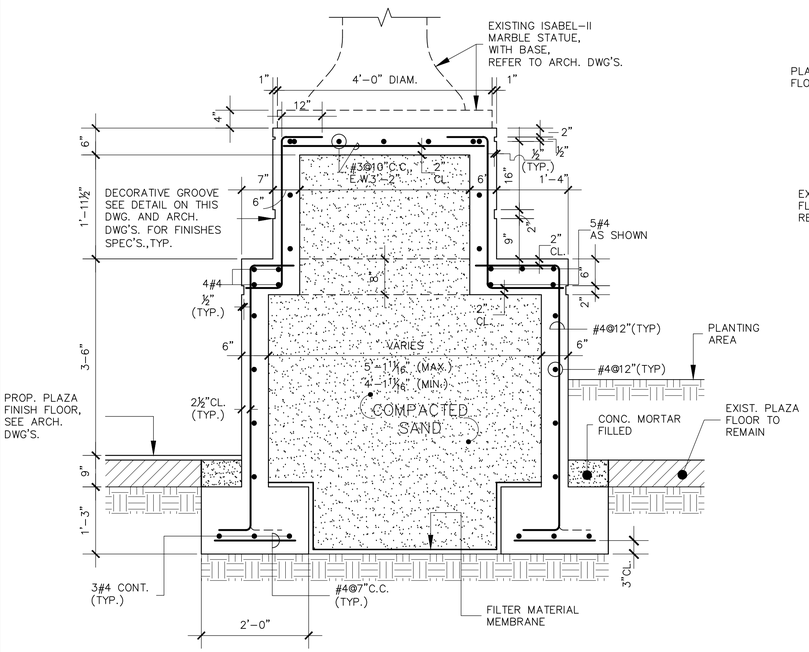

SECTION (1 S-5)

SCALE: 3/4"=1'-0"

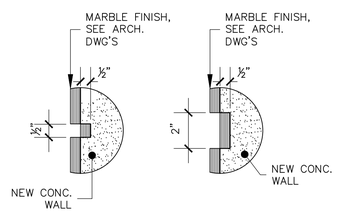

TYP DECORATIVE GROOVE FOR ISABEL-II STATUE STRUTURE

SCALE: 3/4"=1'-0"

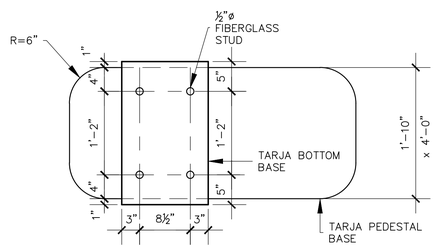

TARJA ANCHOR DETAIL

SCALE: 1"=1'-0"

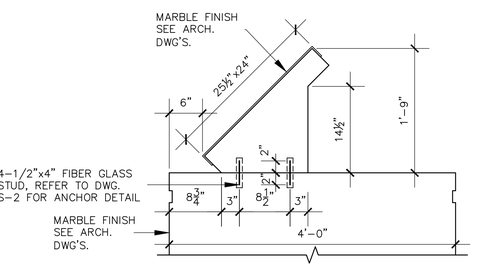

REVITALIZATION OF
LUIS MUÑOZ RIVERA PLAZA
IN THE URBAN CENTER
ARECIBO, PUERTO RICO

IGLESIAS•VAZQUEZ and ASSOCIATES
320 FORTALEZA STREET 2nd FLOOR SAN JUAN, PUERTO RICO 00902 TELS. 721-4545 721-4546
ENGINEERS • ARCHITECTS • PLANNERS

SHEET TITLE:
ISABEL II STATUE & LIONS MONUMENTS STRUCTURE LAYOUT, PLAN, SECTIONS AND DETAILS
SCALE: AS SHOWN

CODE NO: 08-903-

DRAWING NO: S-5

DATE	REVISIONS

SHEET NO: OF 00

N:\Pro\ARECIBO\903 PLAZA ARECIBO\DWG'S\035-903S-5.dwg

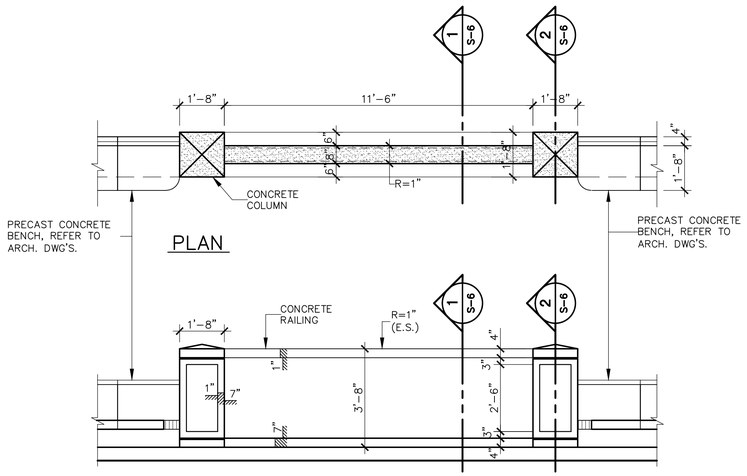

PLAN

ELEVATION

RAILING AND BENCH TYP. FLOOR PLAN

SCALE: 3/8" = 1'-0"

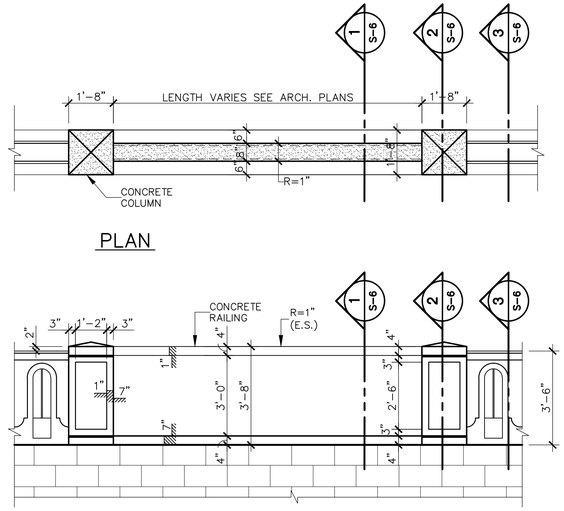

PLAN

ELEVATION

PROPOSED CONC. RAILING DETAIL

SCALE: 3/8" = 1'-0"

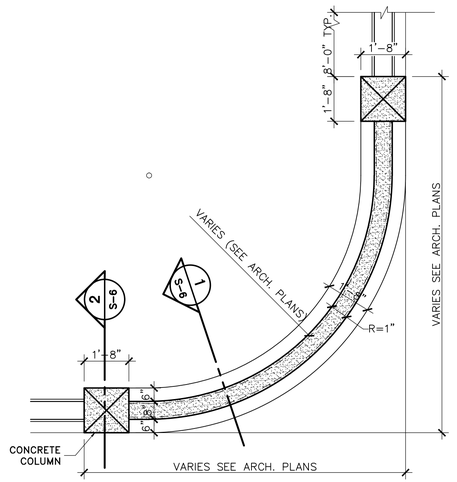

PLAN

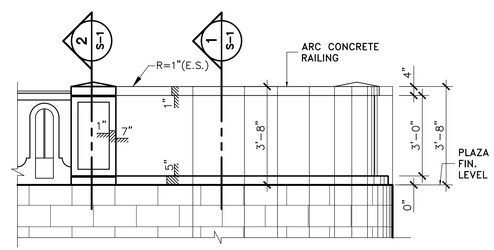

ELEVATION

PROPOSED CONC. RAILING DETAIL

SCALE: 3/8" = 1'-0"

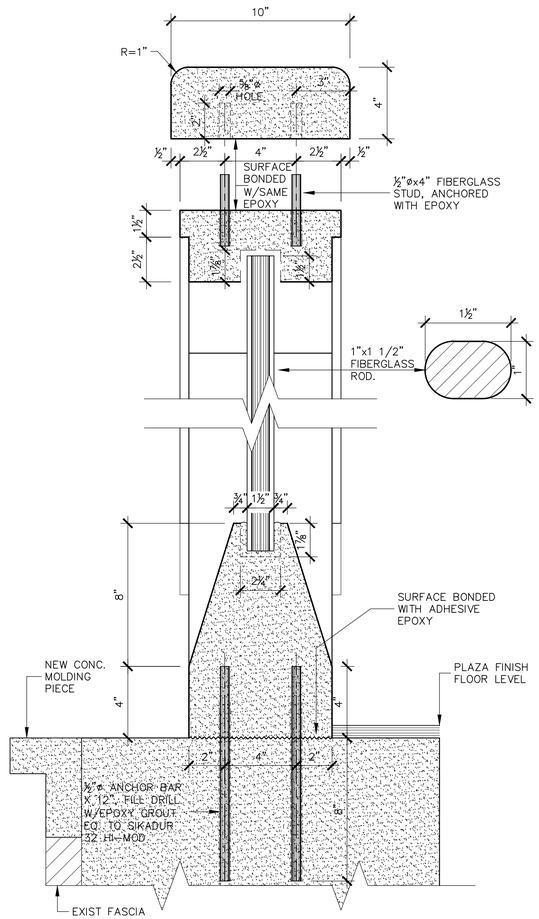

PREFABRICATED RAILING ANCHOR SECTION

SCALE: 3"=1'-0" — 3 / S-6

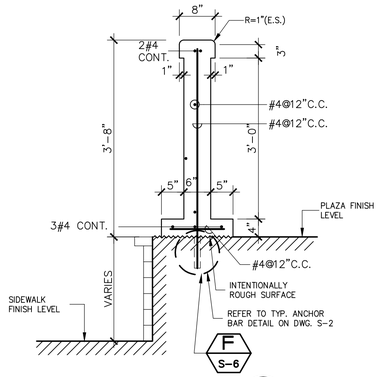

SECTION

SCALE: 3/4"=1'-0" — 1 / S-6

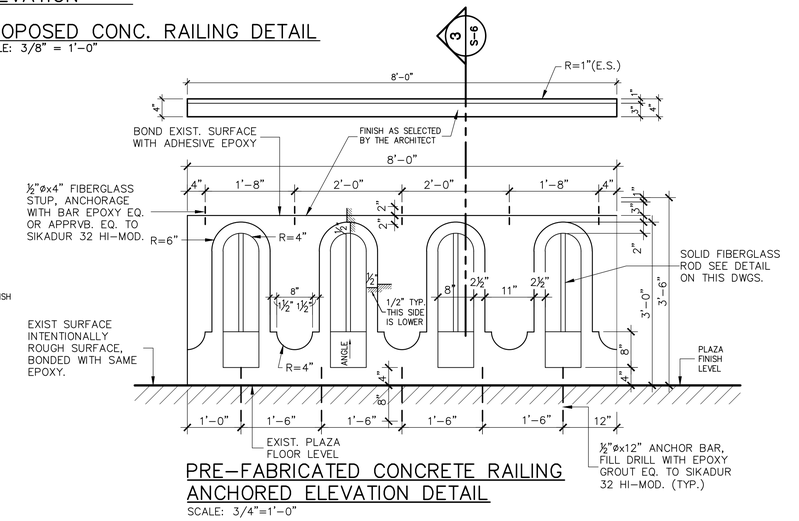

PRE-FABRICATED CONCRETE RAILING ANCHORED ELEVATION DETAIL

SCALE: 3/4"=1'-0"

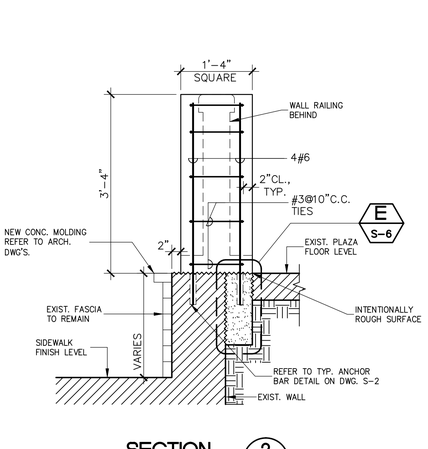

SECTION

SCALE: 3/4"=1'-0" — 2 / S-6

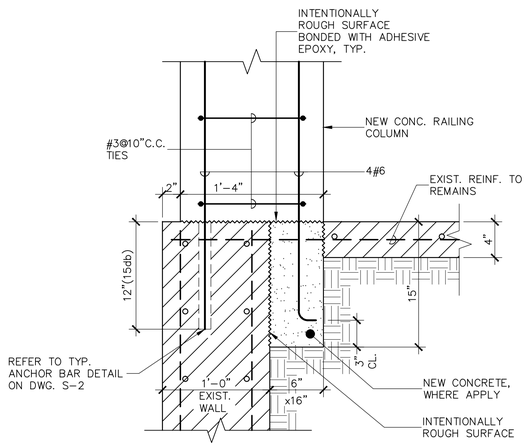

DETAIL

SCALE: 1 1/2"=1'-0" — E / S-6

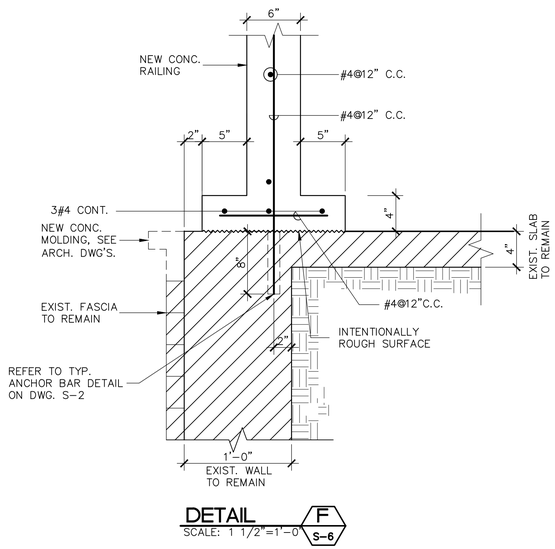

DETAIL

SCALE: 1 1/2"=1'-0" — F / S-6

REVITALIZATION OF
LUIS MUÑOZ RIVERA PLAZA
IN THE URBAN CENTER
ARECIBO, PUERTO RICO

IGLESIAS • VAZQUEZ and ASSOCIATES
ENGINEERS • ARCHITECTS • PLANNERS
320 FORTALEZA STREET 2nd FLOOR SAN JUAN, PUERTO RICO 00902 TELS. 721-4545 721-4546

SHEET TITLE:
CONCRETE RAILINGS PLAN, ELEV., STRUCTURAL SECTIONS AND DETAILS
SCALE: AS SHOWN

CODE NO: 08-903-

DRAWING NO: S-6

DATE	REVISIONS

SHEET NO: OF 00

N:\Pro\ARECIBO\903 PLAZA ARECIBO\DWG'S\036-903S-6.dwg

JOSE DE DIEGO AVE.

PALMA STREET

MARIA DE HOSTOS STREET

GONZALEZ MARIN STREET

3" C.O.G.

FLOOR BOX HYDRANT PIPE TO BE ABANDONED

VALVE

2"ø C.W. COPPER TYPE "K"

2"ø WATER METER BOX

1"ø C.W. COPP. "K"

EXISTING PIPE TO BE CAP (VARIES PIPE DIAMETER)

CHILL WATER COPP. "K"

2"ø C.W. TYPE K

2"ø WATER RETURN SCH. 80

EXISTING 4"ø PVC SDR 18 TO REMAIN

3/8"ø SHILL WATER TYPE K

3"ø SCH. 40 DRAIN PIPE

3"C.O.G.

1 1/2" DRAIN

EXISTING C.B.

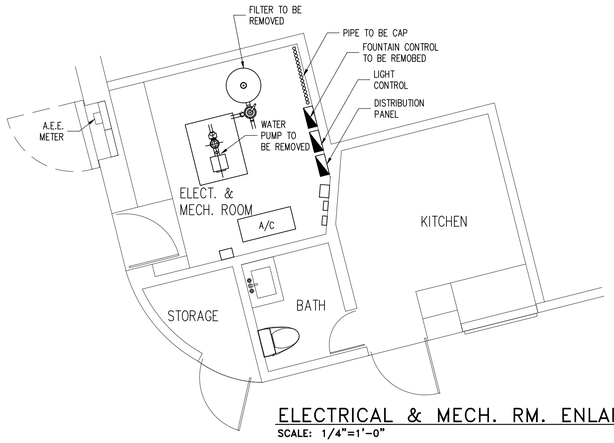

ELECTRICAL & MECH. RM. ENLARGED PLAN
SCALE: 1/4"=1'-0"

EXISTING AND DEMOLITION
PLAZA PLUMBING DISTRIBUTION PLAN
SCALE: 3/32"=1'-0"

NOTE:
1- THE CONTRACTOR WILL DISPOSE OF ALL THE EQUIPMENT AND MATERIALS REMOVED.

2- FOR DETAILS SEE ENLARGED PLAN IN THIS DWG.

3- THE CONTRACTOR WILL TRANSPORT AND STORE THESE MATERIALS / EQUIPMENT AT A LOCATION AS INSTRUCTED THE MUNICIPALITY.

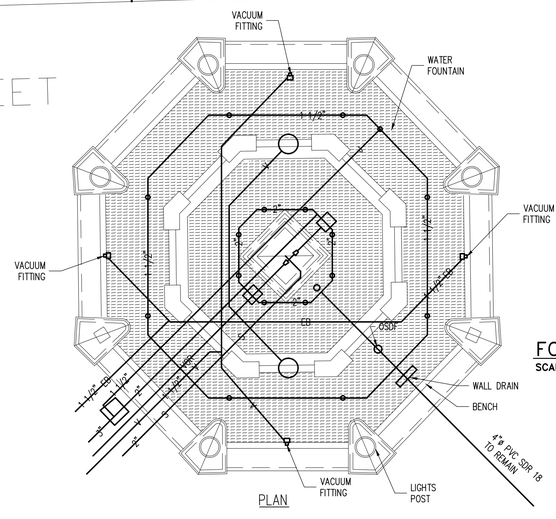

FOUNTAIN ENLARGED PLAN
SCALE: 1/4"=1'-0"

REVITALIZATION OF
LUIS MUÑOZ RIVERA PLAZA
IN THE URBAN CENTER
ARECIBO, PUERTO RICO

IGLESIAS • VAZQUEZ and ASSOCIATES
320 FORTALEZA STREET 2nd FLOOR SAN JUAN, PUERTO RICO 00902 TELS. 721-4545 721-4546
ENGINEERS • ARCHITECTS • PLANNERS

SHEET TITLE:
EXISTING AND DEMOLITION
PLAZA PLUMBING DIST. PLAN
SCALE: AS SHOWN

CODE NO:
08-903-

DRAWING NO:
PD-1

DATE	REVISIONS

SHEET NO:
OF
00

N:\Proj\ARECIBO\903 PLAZA ARECIBO\DWG'S\030-903PD-1.dwg

GENERAL PLUMBING NOTES

1	ALL PLUMBING SHALL BE IN STRICT ACCORDANCE WITH THE REGULATIONS OF THE DEPARTMENT OF HEALTH OF PUERTO RICO, THE LOCAL BUILDING CODE, THE INTERNATIONAL PLUMBING CODE 2015 AND THE SPECIFICATIONS ISSUED FOR THIS PROJECT.
2	SIZES SHOWN IN FIXTURES SCHEDULE ARE MINIMUM AND SHALL BE INCREASED AS NECESSARY TO COMPLY WITH CODE REQUIREMENTS OR AS SHOWN ON DRAWINGS
3	GATE VALVES SHALL BE EQUAL OR APPROVED EQUAL TO WATTS WGV-X IN ACCORDANCE WITH THESE SPECIFICATIONS OR AS CALLED ON DRAWINGS.
4	ALL VALVES NOT EXPOSED SHALL BE PROVIDED MAINTENANCE, ACCESS DOOR SHALL BE AS SPECIFIED OR AS REQUIRED BY THE ARCHITECT.
5	LONG SWEEP BENDS OR LONG SWEEP FITTINGS SHALL BE PROVIDED AT THE BASE OF ALL STACKS.
6	SINGLE AND DOUBLE SANITARY TEES AND QUARTER BENDS SHALL BE USED IN THE DRAINAGE LINES ONLY WHERE THE DIRECTION OF FLOW IS FROM HORIZONTAL TO VERTICAL
7	ALL HORIZONTAL PORTION OF SOIL OR WASTE STACK AND BRANCHES SMALLER THAN 4" SHALL SLOPE 1/4" PER FOOT, ALL OTHER SHALL SLOPE 1/8" PER FOOT
8	THE PLUMBING CONTRACTOR SHALL DETERMINE THE EXACT LOCATION OF EXIST. SANITARY AND WATER PIPING SERVING AND CONNECT TO THEM WITH THE PROPER SIZE AS SHOWN ON THE DRAWINGS. SEE NOTE NO. 17.
9	THE PLUMBING CONTRACTOR SHALL PROVIDE ROUGHING-IN AND INSTALL ALL PLUMBING FIXTURES AND/OR EQUIPMENT WHICH ARE SUPPLIED BY OTHERS.
10	THE PLUMBING CONTRACTOR SHALL DETERMINE THE EXACT LOCATION OF THE PIPING TO AVOID ANY INTERFERENCE WITH PIPING AND/OR EQUIPMENT BEING INSTALLED BY OTHER CONTRACTOR
11	THESE NOTES AS WELL AS THE LEGEND AND DETAILS APPLIES TO ALL PLUMBING WORKS FOR THE PROJECT.
12	FOR, FIXTURES AND EQUIPMENT NOT LISTED IN SCHEDULE, SEE CONTRACT SPECIFICATIONS
13	THE CONTRACTOR SHALL FURNISH AND SET IN PLACE BEFORE CONCRETE POURING ALL NECESSARY SLEEVES FOR WASTE OR SOIL, VENT HOT AND COLD WATER LINES, THESE SLEEVES SHALL BE AS SPECIFIED OR REQUIRED BY THE ARCHITECT.
14	CLEANOUTS SHALL BE NOT MORE THAN 50 FEET APART IN HORIZONTAL DRAINAGE LINES OF 4" NOMINAL DIAMETER OR LESS AND NOT MORE THAN 100 FEET APART FOR LARGER PIPES.
15	CLEANOUTS SHALL BE THE SAME NOMINAL SIZE OF THE PIPES UP TO 4" AND NOT LESS THAN 4" LARGER PIPING.
16	THE BUILDING SEWER, WHEN INSTALLED IN THE SAME TRENCH WITH THE WATER SERVICE PIPE, SHALL BE SO INSTALLED AS TO REMAIN WATERTIGHT AND ROOT RESISTANT, THE FOLLOWING CONDITION MUST BE MET: A. THE WATER-SERVICE PIPE MUST BE PLACED ON SOLID SHELF AT THE SIDE OF THE TRENCH AND MUST BE INSTALLED AT LEAST 12" ABOVE, THE TOP LEVEL OF THE BUILDING SEWER PIPE. B. THE WATER-SERVICE PIPE SHOULD BE IN ONE PIECE BETWEEN THE BLDG. AND THE WATER MAIN. C. THE BUILDING SEWER SHALL BE TESTED AFTER INSTALLATION WITH NOT LESS THAN 10'-0" HEAD WATER OR BY MEANS OF AN EQUIVALENT TEST.
17	THE PLUMBING CONTRACTOR SHALL LEAVE CLEAN AND CLEAR OF DEBRIS FOR ARCHITECT APPROVAL A SECTION OF 10'-0" LONG OF EXISTING SANITARY LINE BEFORE DOING ANY PLUMBING WORK OR CONNECTING NEW SOIL OR WASTE LINE.
18	IN EXISTING WALLS AND/OR FLOORS WHERE NEW WATER, SANITARY OR VENTILATION LINES RUN HORIZONTAL AND/OR VERTICAL WAY, THE CONTRACTOR SHALL CUT OR DEMOLISH THE NECESSARY AREA TO ALLOW THE WORK. AFTER FINISHING THE PIPE OR PIPES PLACING THE CONTRACTOR MUST REPAIR THE AFFECTED AREA, FINISHING IT WITH CEMENT PLASTER AND PAINT TO MATCH ADJACENT WALLS.
19	WHEN PLUMBING FIXTURES ARE TO BE INSTALLED IN NEW CONCRETE BLOCK WALL, CELLS SHALL BE WELL FILLED WITH CEMENT MORTAR.
20	WHEN IN EXISTING BUILDING NEW PLUMBING FIXTURES ARE TO BE INSTALLED IN SUBSTITUTION OF EXISTING FIXTURES, THE PLUMBING CONTRACTOR SHALL DETERMINE THE EXACT LOCATION OF EXISTING WATER, SANITARY AND VENTILATION PIPES AND CONNECT THEM WITH PROPER FITTINGS TO THE NEW FIXTURES ROUGHING-IN-. FOR REPAIRING THE AFFECTED AREA REFERS TO NOTE NO. 18.
21	VENT PIPING SHOULD BE INSTALLED IN PRACTICAL ALIGNMENT AND SLOPED UPWARD CONTINUOUSLY FROM ITS LOWEST CONNECTION WITH SOIL OR WASTE PIPING TO ITS TERMINAL IN THE ATMOSPHERE ABOVE BUILDING ROOF.
22	REQUIREMENTS: NO DRAINAGE OR PLUMBING SYSTEM OR PART THERE OF SHALL BE COVERED UNTIL IT HAS BEEN INSPECTED, TESTED AND ACCEPTED AS PRESCRIBED ON DRAWINGS AND/OR INTERNATIONAL PLUMBING CODE. THIS REQUIREMENT IS IN REFERENCE TO POSSIBLE TIGHTNESS OF THE PIPING UNDERGROUND OR BUILT INTO THE WALL IT IS FAR LESS COSTLY TO TEST THE WORK PROPERLY WHEN FIRST INSTALLED THAN LATER TO HAVE REMOVE A PLASTERED WALL OR CUT OUT A CONCRETE FLOOR. THE COST INVOLVED IN PROVIDING NECESSARY TEST PLUG, NIPPLES, PUMPS, AND LABOR TO PREPARE FOR THE TEST IS UP THE LICENSED PLUMBER OR PLUMBING CONTRACTOR. THE TEST AND INSPECTIONS SHOULD BE CONDUCTED AS REQUIRED BY SECTION 312 OF THE INTERNATIONAL PLUMBING CODE 2015.
23	ALL SANITARY AND WATER PIPES CONNECTING TO ALL STRUCTURES SHALL BE OF FLEXIBLE TYPE.
24	PROVIDE ELECTRICAL SUPPLY & OUTLET FOR PLUMBING FIXTURE OR ACCESSORIES ACCORDING TO THE MANUFACTURER BE REQUIRE IN COORDINATION WITH THE ELECTRICAL DESIGN.

SYMBOLS AND ABBREVIATIONS

ABBREVIATIONS		SYMBOLS AND LEGEND
S.	SOIL PIPE	S.
S.S.	SOIL STACK PIPE	S.S.
S.D.	STORM DRAIN PIPE	S.D.
R.L.	RAIN LEADER DRAIN PIPE	R.L.
W.	WASTE PIPE	W.
W.S.	WASTE STACK PIPE	W.S.
V.	VENT PIPE	V.
S.V.	STACK VENT PIPE	S.V.
V.S.	VENT STACK PIPE	V.S.
V.T.R	VENT THROUGH ROOF	V.T.R.
C.W.	COLD. WATER	CW
H.W.	HOT WATER	HW
H.W.R.	HOT WATER RETURN	HWR
C.O.F.W.G.	CLEANOUT FLUSH WITH GROUND	C.O.F.W.G.
C.O.F.W.F.	CLEANOUT FLUSH WITH FLOOR	C.O.F.W.F.
C.O.F.W.W.	CLEANOUT FLUSH WITH WALL	C.O.F.W.W.
C.O. PLUG	CLEANOUT PLUG	C.O. PLUG
F.D.	FLOOR DRAIN	F.D.
F.F.	FINISHED FLOOR	
A.F.F.	ABOVE FINISHED FLOOR	
A.F.R.	ABOVE FINISHED ROOF	
P.V.C.	POLYVINYL CHLORIDE PLASTIC OR RESIN)	
HANGER	HANGER LOCATION (NOT MORE THAN 6 FT. APPART)	
HANGER	HANGER LOCATION (NOT MORE THAN 6 FT. APPART)	

SOIL , WASTE AND VENT PIPES TO BE IN PVC SCH. 40 OR AS NOTED ON DRAWINGS

COLD WATER, HOT WATER AND HOT WATER RETURN PIPES WILL BE INSTALLED IN PEX TYPE PIPING. ALL PARTS TO TO BE USED FOR CONNECTION IN THIS PEX PIPE WILL BE IN COPPER. USE PEX BRASS FITTING WITH PEX TUBING AND TIGHTEN TO THE PIPE USING CRIMP RINGS OR PINCH CLAMPS WITH THE SPECIFIC TOOLS FOR PEX PIPE. FOLLOW ALL INSTRUCTION INCLUDED WITH TOOLS, ACCESSORIES AND FASTENERS.

OTHER TYPES OF MATERIAL IN THE PIPES WILL BE SPECIFIED ON THE DRAWINGS.

PLUMBING FIXTURES SCHEDULE

PLUMBING FIXTURES TO BE EQ. OR APP EQ. TO: AMERICAN STANDARD (A.S.), CHICAGO FAUCET (C.F.) McGUIRE (McG), ELKAY (E), WATTS (W), J.R.SMITH (J.R.S.), MUSTEE (M) & SLOAN ROYAL (S.R.).

ALL PLUMBING FIXTURES AND FITTING SHALL BE INSTALLED FOLLOWING MANUFACTURER'S RECOMMENDATIONS, INSTALLATION INSTRUCTIONS AND CURRENT ROUGHING-IN DIMENSIONS SHALL BE FURNISHED WITH EACH FIXTURES BY PLUMBING FIXTURES MANUFACTURER.
DO NOT ROUGH-IN WITHOUT CERTIFIED DIMENSIONS.

MK'D.	FIXTURES	SOIL/ WASTE	VENT	SUPPLY COLD	SUPPLY HOT	FIXTURES MFR'S AND MODEL NUMBER	QTY.	DESCRIPTION
1	NOZZLE 1	–	–	3"	–	RCN-300 ROMAN FONTAIN	1	
2	PENETRATION 1	–	–	3"	–	RWS-300-S ROMAN FONTAIN	1	
3	VALVE 1	–	–	3"	–	RBB-300-T ROMAN FONTAIN	1	
4	NOZZLE 2	–	–	6"	–	RCN-150 ROMAN FONTAIN	1	
5	PENETRATION 2	–	–	6"	–	RWS-150-S ROMAN FONTAIN	1	
6	VALVE 2	–	–	6"	–	RBB-150-T ROMAN FONTAIN	1	
7	ANTI-VORTEX 1	–	–	6"	–	RAVS-2400-CC ROMAN FONTAIN	2	
8	ANTI-VORTEX 2	–	–	2"	–	RAVS-800-F-SS ROMAN FONTAIN	2	
9	FLOOR DRAIN	–	–	2"	–	RFD-300 ROMAN FONTAIN	1	
10	WALL OVER FLOW	3"	–	–	–	ROVS-200-W ROMAN FONTAIN	2	
11	FILL MANIFOLD	–	–	–	–	ROVS-075-NS ROMAN FONTAIN	1	ON MECH. ROOM
12	INLET FITTING	–	–	1"	–	RIF-150-A ROMAN FONTAIN	1	
13	LIGHT RGB	–	–	–	–	RLF-FM-RGB-24VDC-36W ROMAN FONTAIN	16	TO CONTROL P
14	J-BOX	–	–	–	–	RJB-4-100-F ROMAN FONTAIN	4	TO CONTROL P
15	POTTING COMPOUND	–	–	–	–	RPC-2114-D ROMAN FONTAIN	6	
16	SKIMMER	–	–	2"	–	RPS-150-FA ROMAN FONTAIN	2	
17	RETURN FITTING	–	–	2"	–	REF-150-WS ROMAN FONTAIN	2	
18	DISPLAY PUMP SKID	–	–	–	–	RSM-2F-10HP-3PH ROMAN FONTAIN	1	ON MECH. ROOM
19	FILTER PUMP SKID	–	–	–	–	RSFS-60D-1HP-RBU ROMAN FONTAIN	1	ON MECH. ROOM
20	ANEMOMETER	–	–	–	–	RWC-A-BRCKT ROMAN FONTAIN	1	ON MECH. ROOM (ROOF AREA)
21	CONTROL PANEL	–	–	–	–	RPCP/RLCP-RGB ROMAN FONTAIN	1	ON MECH. ROOM
22	WATER LEBEL SENSOR	–	–	–	–	RCOM-WNA ROMAN FONTAIN	1	ON MECH. ROOM

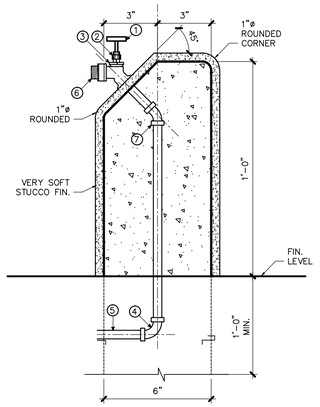

LEGEND:

MK'D	DESCRIPTION
①	LOCKSHIELD KEY-RED BRONZE
②	LOCKSHIELD-RED BRONZE
③	SILLCOCK EQUAL TO NIBCO FIG.NO.NIBCO 763 VB-LS
④	90° ELL CxC /12" CC
⑤	1/2"ø C.W.
⑥	BACKFLOW PREVENTER EQ. OR APP. EQ. TO WATTS 8A-CODE NO. 0061877-3/4" FEMALE INLET 3/4"ø MALE OUTLET.
⑦	45° ELL CxC /12" CC

HB P-1 HOSE BIBB INSTALLATION DET.

SCALE: AS NOTED

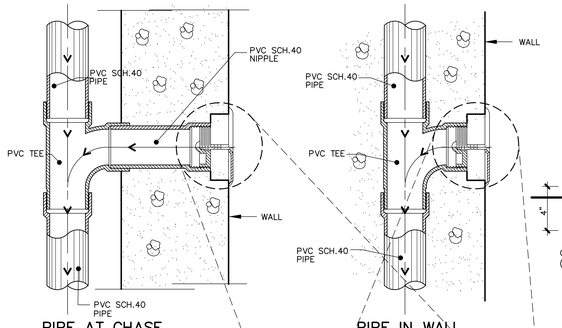

PIPE AT CHASE
N.T.S

PIPE IN WALL
N.T.S

CLEANOUT FLUSH WITH GROUND
SC. 1 1/2"=1'-0"

"A" PIPE DIAM. SIZE	"B" DIAM.
1 1/2"	4 1/4"
2"	
2 1/2"	
3"	5 1/2"
3 1/2"	
4"	
5"	7"
6"	9 1/4"
8"	11 1/4"
10"	

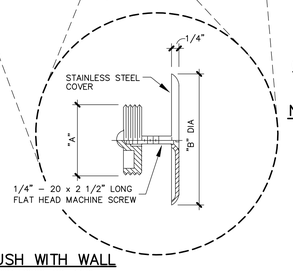

CLEANOUT FLUSH WITH WALL
EQ. OR APP. EQ. J.R. SMITH FIGURE NO. 4472

NOTE:

CLEANOUT FLUSH WITH FLOOR EQ. OR APP. EQ. J.R. SMITH FIGURE NO. 4052.

CLEANOUT FLUSH WITH GROUND EQ. OR APP. EQ. TO J.R.SMITH FIGURE NO.4292

CO P-1 CLEANOUT DETAILS

SCALE: AS NOTED

REVITALIZATION OF
LUIS MUÑOZ RIVERA PLAZA
IN THE URBAN CENTER
ARECIBO, PUERTO RICO

IGLESIAS•VAZQUEZ and ASSOCIATES
ENGINEERS • ARCHITECTS • PLANNERS
320 FORTALEZA STREET 2nd FLOOR SAN JUAN, PUERTO RICO 00902 TELS. 721-4545 721-4546

SHEET TITLE: GENERAL PLUMBING NOTES SCHEDULES AND DETAILS
SCALE: AS SHOWN

CODE NO: 08-903-

DRAWING NO: P-1

DATE	REVISIONS

SHEET NO: OF 00

N:\Users\Napi\2024\ARECIBO PLAZA PUBLICA\2024-26 Norberto Medina - Plomeria\003-903P-1 - P-2 - PD-1 Standard.zip (Unzipped Files)\031-903P-1 GENERAL NOTES AND DETAILS.dwg

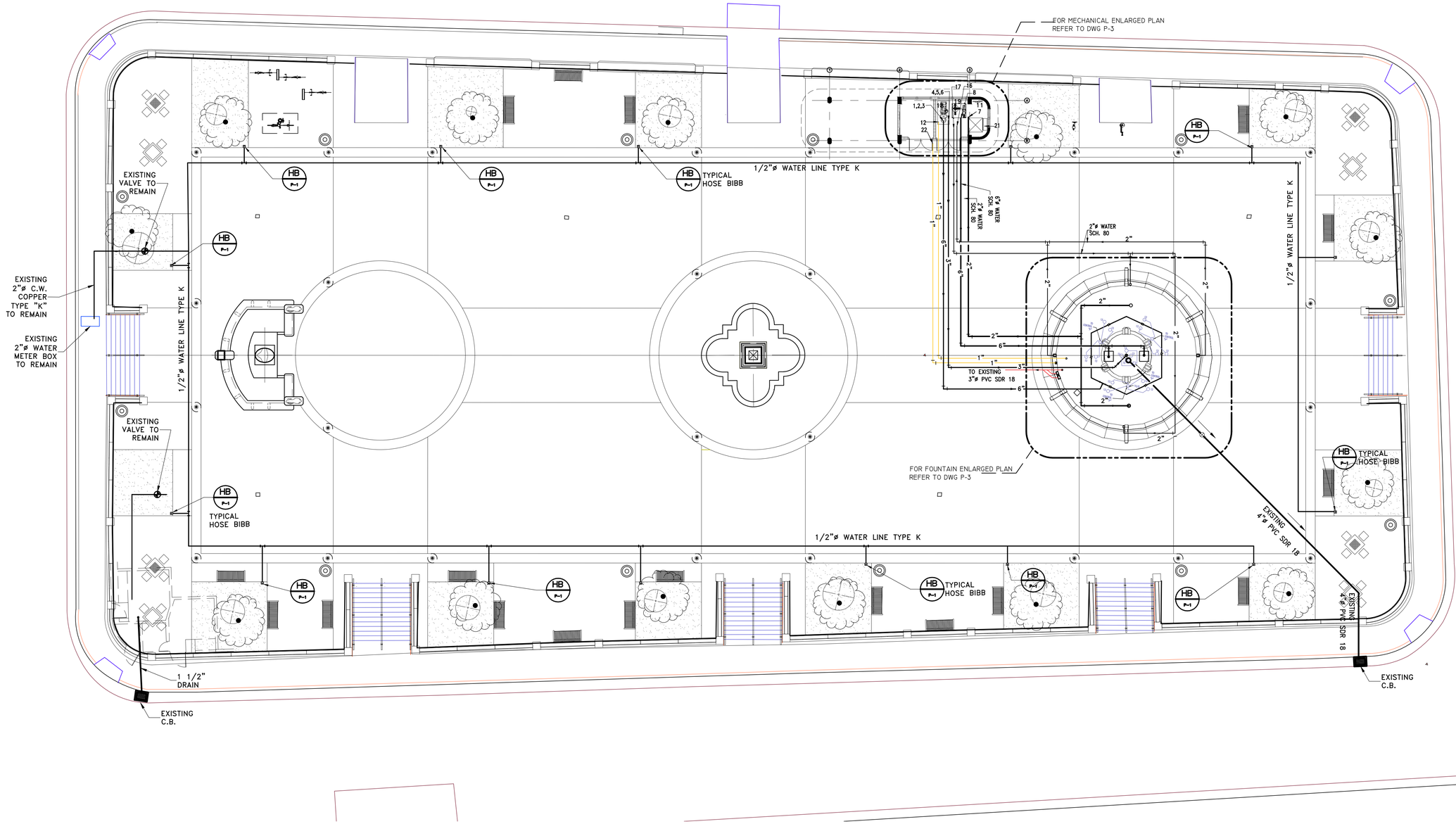

PROPOSED
PLAZA PLUMBING DISTRIBUTION PLAN

SCALE: 3/32"=1'-0"

NOTE:
1- FOR EQUIPMENT DESCRIPTION SEE SCHEDULE ON SHEET P-1

2- FOR HOSE BIBB DETAIL SEE SHEET P-1

REVITALIZATION OF
LUIS MUÑOZ RIVERA PLAZA
IN THE URBAN CENTER
ARECIBO, PUERTO RICO

IGLESIAS•VAZQUEZ and ASSOCIATES
320 FORTALEZA STREET 2nd FLOOR SAN JUAN, PUERTO RICO 00902 TELS. 721-4545 721-4546
ENGINEERS • ARCHITECTS • PLANNERS

SHEET TITLE:
PROPOSED
PLAZA PLUMBING DIST. PLAN
SCALE: AS SHOWN

CODE NO:
08-903-

DRAWING NO:
P-2

DATE	REVISIONS

SHEET NO:
OF
00

N:\Proj\ARECIBO\903 PLAZA ARECIBO\DWG'S\031-903P-2-P3.dwg

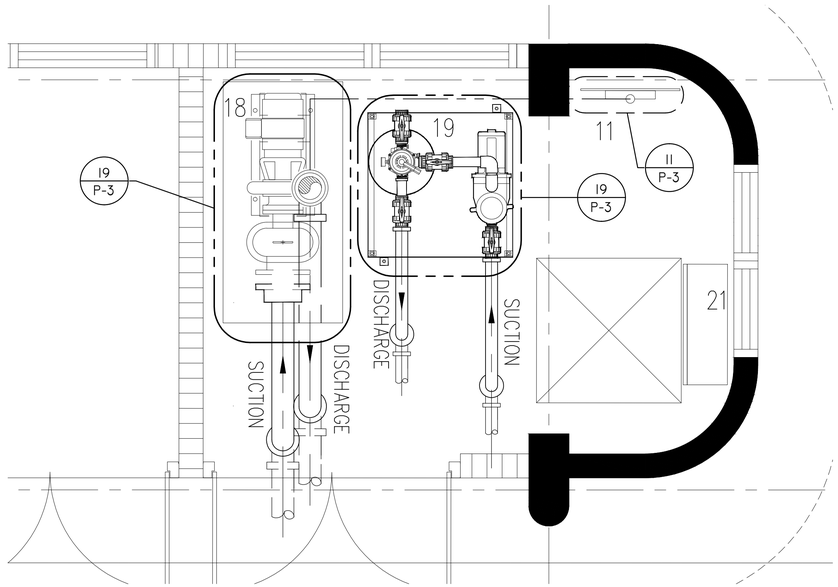

MECHANICAL ENLARGED PLAN
SCALE: 3/8"=1'-0"

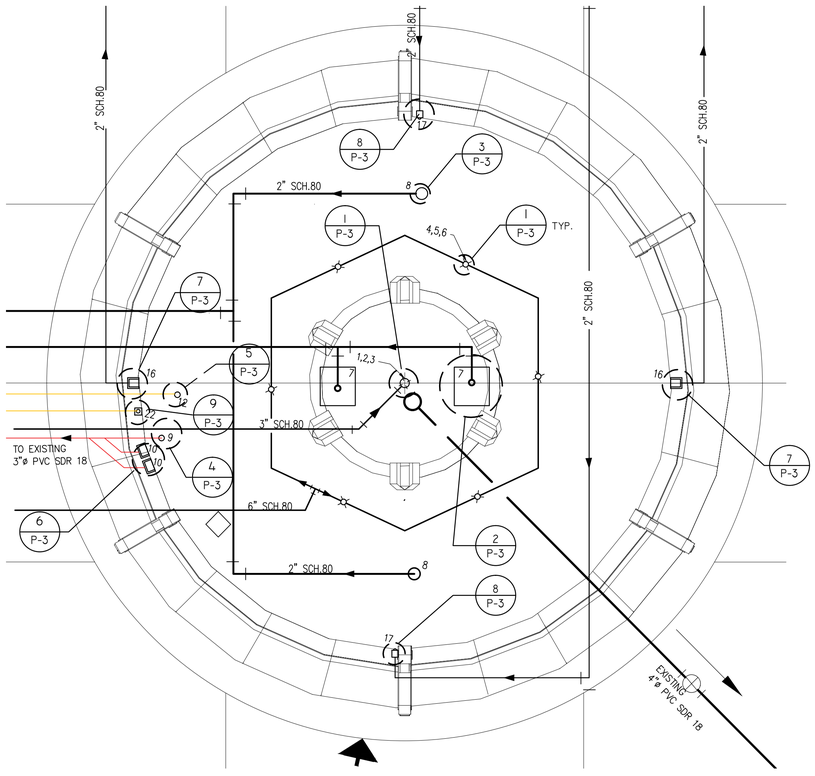

FOUNTAIN ENLARGED PLAN
SCALE: 1/4"=1'-0"

NOTE:
1- FOR ELECTRICAL EQUIPMENT SEE ELECTRICAL DWG ON SHEET E-
2- FOR

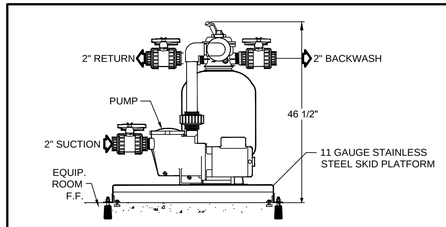

SIDE ELEVATION

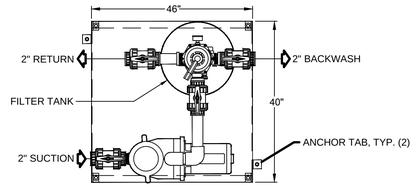

PLAN VIEW

19 P-3 FILTER PUMP SKID DET.
N.T.S

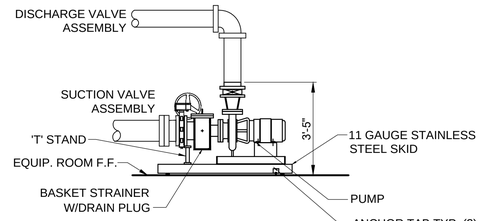

SIDE ELEVATION

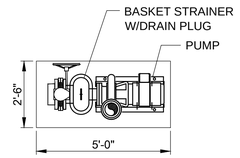

PLAN VIEW

18 P-3 PUMP SKID DET.
SCALE: 3/8"=1'-0"

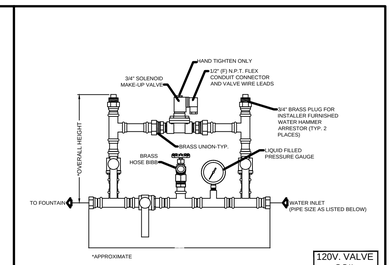

FLOW ORIENTATION
RIGHT-TO LEFT

TECHNICAL DATA

MODEL NO.	FILL LINE PIPE SIZE	APPROX. MANUAL FILL RATE/50 P.S.I.	*OVERALL LENGTH	*OVERALL HEIGHT
RMS-075-NS	3/4"	12 GPM	1'-11 1/2"	1'-0 1/2"
RMS-100-NS	1"	25 GPM	2'-0 1/2"	1'-0 7/8"
RMS-150-NS	1 1/2"	90 GPM	2'-3 1/2"	1'-0 1/2"
RMS-200-NS	2"	320 GPM	2'-8 1/2"	1'-3 3/8"

11 P-3 FILL MANIFOLD DET.
N.T.S

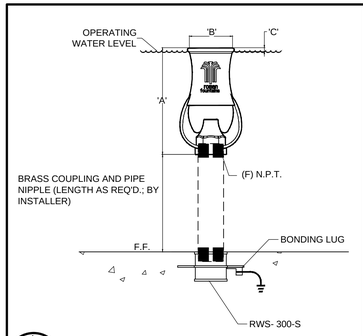

1 P-3 WATER NOZZLE DET.
N.T.S

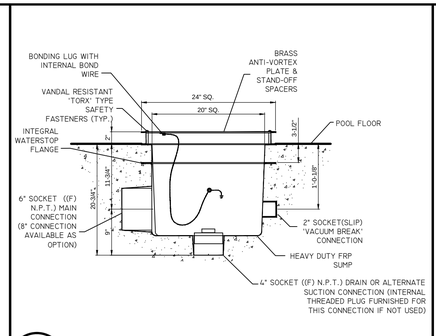

2 P-3 ANTI-VORTEX TYPE-1
N.T.S

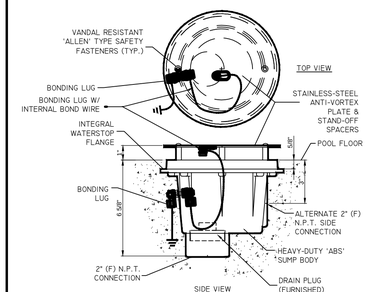

SIDE VIEW

3 P-3 ANTI-VORTEX TYPE-2
N.T.S

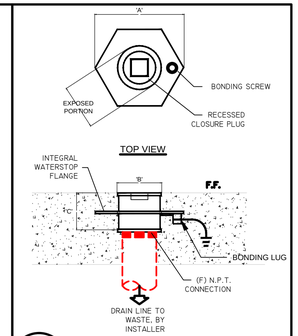

4 P-3 FLOOR DRAIN
N.T.S

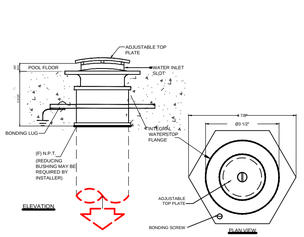

SIDE ELEVATION FRONT ELEVATION

TECHNICAL DATA

Model No.	Connection Size	Dimension 'A'	Dimension 'B'	Dimension 'C'	Dimension 'D'	Dimension 'E'	Open Area	Max. Drain Rate
ROVS-200-W	2"	10"	1-1/2"	6"	2-7/8	3.5" dia.	6.5 Sq. In.	20 GPM

6 P-3 WALL OVER FLOW DET.
N.T.S

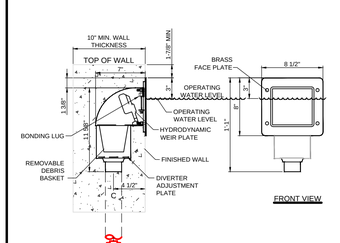

SIDE VIEW FRONT VIEW

7 P-3 SKIMMER DET.
N.T.S

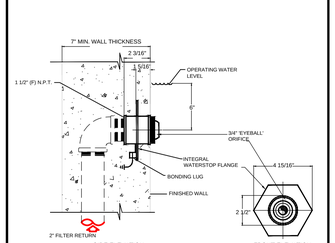

SIDE ELEVATION FRONT ELEVATION

NOTE: INSTALL WATERSTOP FLANGE FACE FLUSH TO FINISHED WALL.

8 P-3 RETURN FITTING DET.
N.T.S

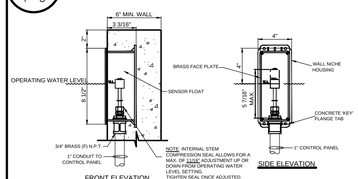

FRONT ELEVATION SIDE ELEVATION

9 P-3 INLET FITTING DET.
SCALE: 1 1/2"=1'-0"

5 P-3 INLET FITTING DET.
N.T.S

IGLESIAS•VAZQUEZ and ASSOCIATES
320 FORTALEZA STREET 2nd FLOOR SAN JUAN, PUERTO RICO 00902 TELS. 721-4545 721-4546
ENGINEERS • ARCHITECTS • PLANNERS

REVITALIZATION OF
LUIS MUÑOZ RIVERA PLAZA
IN THE URBAN CENTER
ARECIBO, PUERTO RICO

SHEET TITLE:
PROPOSED PLAZA PLUMBING DIST
ENLARGE PLAN AND DETAIL
SCALE: AS SHOWN

CODE NO:
08-903-

DRAWING NO:
P-3

SHEET NO:
OF
00

DATE	REVISIONS

N:\Proj\ARECIBO\903 PLAZA ARECIBO\DWG'S\031-903P-2-P3.dwg

EXISTING AND DEMOLITION PLAZA – ELECTRICAL INSTALLATION

SCALE: 1:200

NORTH

NOTES:

1–THE ELECTRICAL INSTALLATION SHOWN ABOVE DEPICTS THE EXISTING ELECTRICAL INSTALLATION AT THE PLAZA & THE SURROUNDING SIDEWALK. ALL THE EXISTING LIGHTING POLES "●–⊙R & ◉R" ARE TO BE REMOVED. THE EXISTING UNDERGROUND CONDUIT WORK AT THE PLAZA IS TO BE ABANDONED AND THE WIRING REMOVED. AT THE SIDEWALK, THE EXISTING CONDUIT IS TO REMAIN & BE REUSED, ALL WIRING IS NEW. ALL HOME RUNS IN THE EXISTING CONDUIT WORK TO BE RE-USED ARE TO BE RE-ROUTED TO NEW PANEL "PA".

2–THE USE OF THE TERM "REUSE EXISTING ELECTRICAL INSTALLATION AS MUCH AS POSSIBLE" MEANS THAT SAID INSTALLATION MUST BE IN ACCORDANCE WITH ALL EXISTING PREVAILING (CURRENT) SAFETY AND CONSTRUCTION CODES, STANDARDS AND PRACTICES AS WELL AS THE INSTALLATION BEING IN A WELL-PRESERVED STATE, BOTH PHYSICAL AND ELECTRICAL, SUITABLE FOR ITS REUSE.

KEY OF SYMBOLS:

- ●–⊙R EXISTING POLE MOUNTED LIGHTING FIXTURE TO BE REMOVED IN SIDEWALK TOGETHER WITH POLE
- ◉R EXISTING POLE & LIGHTING FIXTURE TO BE REMOVED IN THE PLAZA AREA
- —R— EXISTING CONDUIT TO BE ABANDONED
- —RW— EXISTING CONDUIT TO BE RE-USED AS MUCH AS POSSIBLE, EXISTING WIRING TO BE REMOVED

The Office of LEONARDO J. VIDAL Consulting Engineers
Lic. no. 6092
P.O. Box 363164, San Juan, P.R. 00936-3164
Tels.: (787) 765-5631, Fax.: (787) 765-7399
Email: oficinaljv@gmail.com

LJV DRAWING HISTORY		LJV-DSB DESIGN STAGE	
PROJECT NO:	23-059	SCHEMATIC DWGS: (SD)	
DRAWING NO:	PE-1	PRELIMINARY DWGS: (PD)	
CAD FILE:	23-059/	DESIGN DEVELOPMENT DWGS: (DD)	
CAD SUBFILE:	23-059-PE001 -R00-BD	ADVANCED DWGS: (AD)	
PLOT DATE:	06.10.24	BID DWGS: (BD)	●
PLOT SCALE:	1:1	CONTRACT DWGS: (CD)	
ISSUE DATE:	06.10.24	RECORD DWGS: (RD)	
REMARKS:	NOT FOR CONSTRUCTION	-	%
RELATED PROJECTS:	-------------------------------		

DATE	REVISIONS

REVITALIZATION OF LUIS MUÑOZ RIVERA PLAZA IN THE URBAN CENTER
ARECIBO, PUERTO RICO

IGLESIAS ● VAZQUEZ and ASSOCIATES
320 FORTALEZA STREET 2nd FLOOR SAN JUAN, PUERTO RICO 00902 TELS. 721-4545 721-4546
ENGINEERS · ARCHITECTS · PLANNERS

SHEET TITLE:
EXISTING AND DEMOLITION PLAZA-ELECTRICAL INSTALLATION
SCALE: AS SHOWN

CODE NO: 08-903-PE1

DRAWING NO: PE-1

SHEET NO: 3 OF 00

J:\2023\23-059 Plaza Publica Arecibo\00 Elec 2024-02-07\23-059-PE-001 demo plaza - Standard\23-059-PE-001 demo plaza.dwg

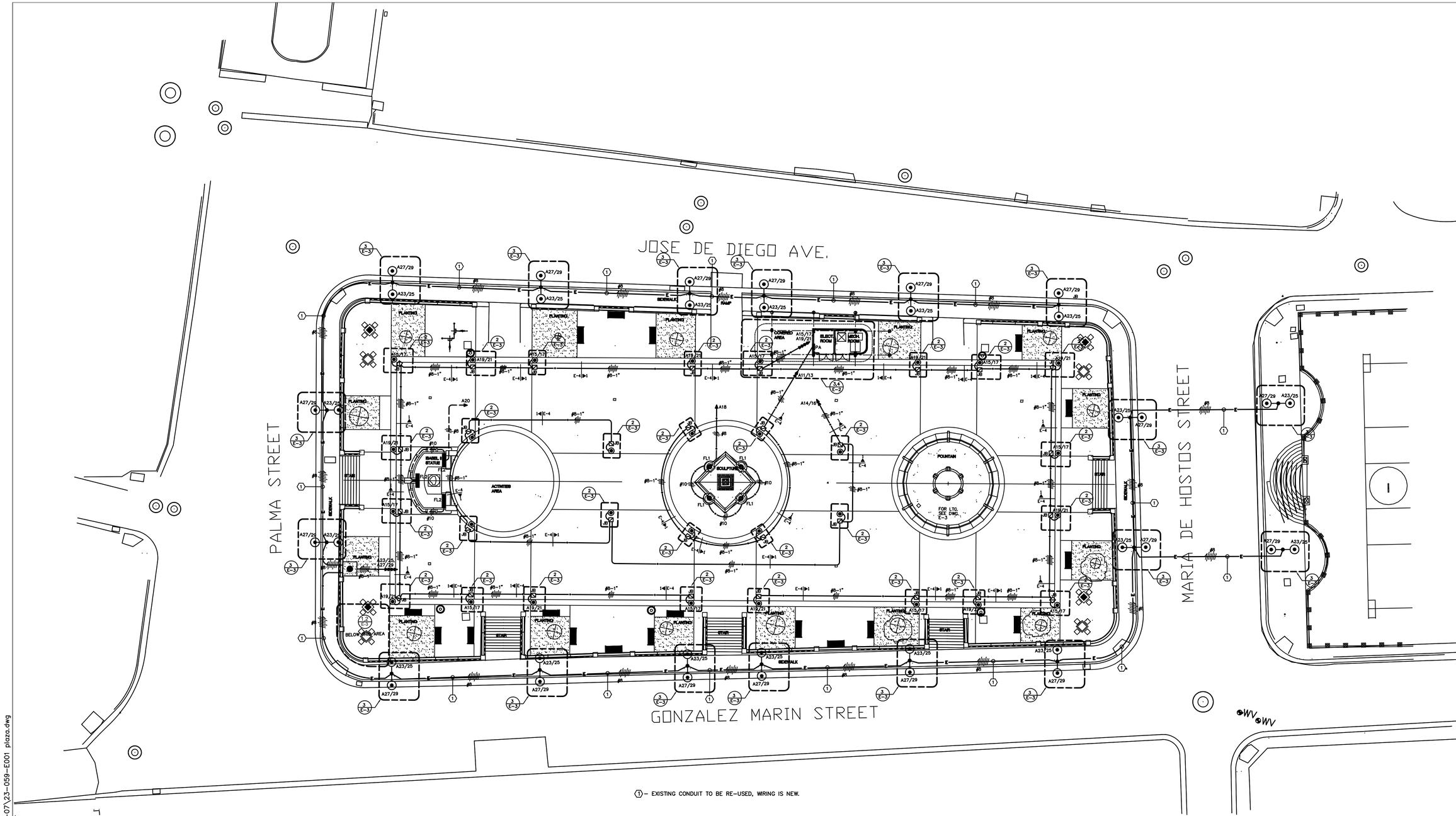

(1) – EXISTING CONDUIT TO BE RE-USED, WIRING IS NEW.

PLAZA FLOOR PLAN – ELECTRICAL INSTALLATION

SCALE: 1/16"=1'-0"

NORTH

LJV DRAWING HISTORY		LJV-DSB DESIGN STAGE	
PROJECT NO:	23-059	SCHEMATIC DWGS: (SD)	
DRAWING NO:	E-1	PRELIMINARY DWGS: (PD)	
CAD FILE:	23-059/	DESIGN DEVELOPMENT DWGS: (DD)	
CAD SUBFILE:	23-059-E001 -R00- BD	ADVANCED DWGS: (AD)	
PLOT DATE:	06.10.24	BID DWGS: (BD)	●
PLOT SCALE:	1:1	CONTRACT DWGS: (CD)	
ISSUE DATE:	06.10.24	RECORD DWGS: (RD)	
REMARKS:	NOT FOR CONSTRUCTION	–	%
RELATED PROJECTS:	----------		

The Office of LEONARDO J. VIDAL Consulting Engineers
P.O. Box 362744, San Juan, P.R. 00936-2744
Tels.: (787) 765-5631 / Fax: (787) 765-7399
Email: info@ljvidal.com

DATE	REVISIONS

REVITALIZATION OF
LUIS MUÑOZ RIVERA PLAZA
IN THE URBAN CENTER
ARECIBO, PUERTO RICO

IGLESIAS • VAZQUEZ and ASSOCIATES
320 FORTALEZA STREET 2nd FLOOR SAN JUAN, PUERTO RICO 00902 TELS. 721-4545 721-4546
ENGINEERS • ARCHITECTS • PLANNERS

SHEET TITLE:
PLAZA FLOOR PLAN
ELECTRICAL INSTALLATION
SCALE: AS SHOWN

CODE NO:
08-903-

DRAWING NO:
E-1

SHEET NO:
OF
00

J:\2023\23-059 Plaza Publica Arecibo\00 Elec 2024-02-07\23-059-E001 plaza.dwg

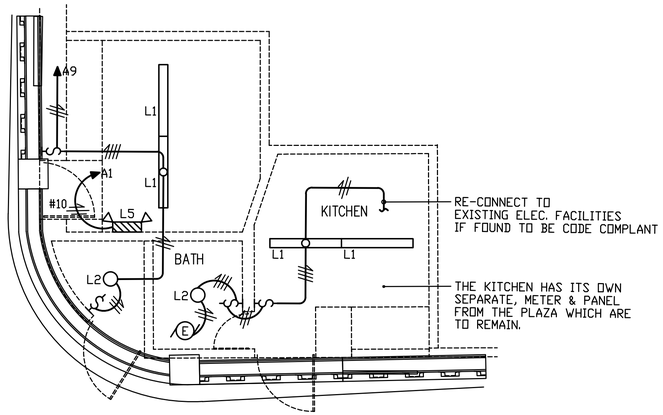

1 / E-2 KIOSK ELECTRICAL BLOW-UP-LIGHTING
SCALE: 1/4"=1'-0"

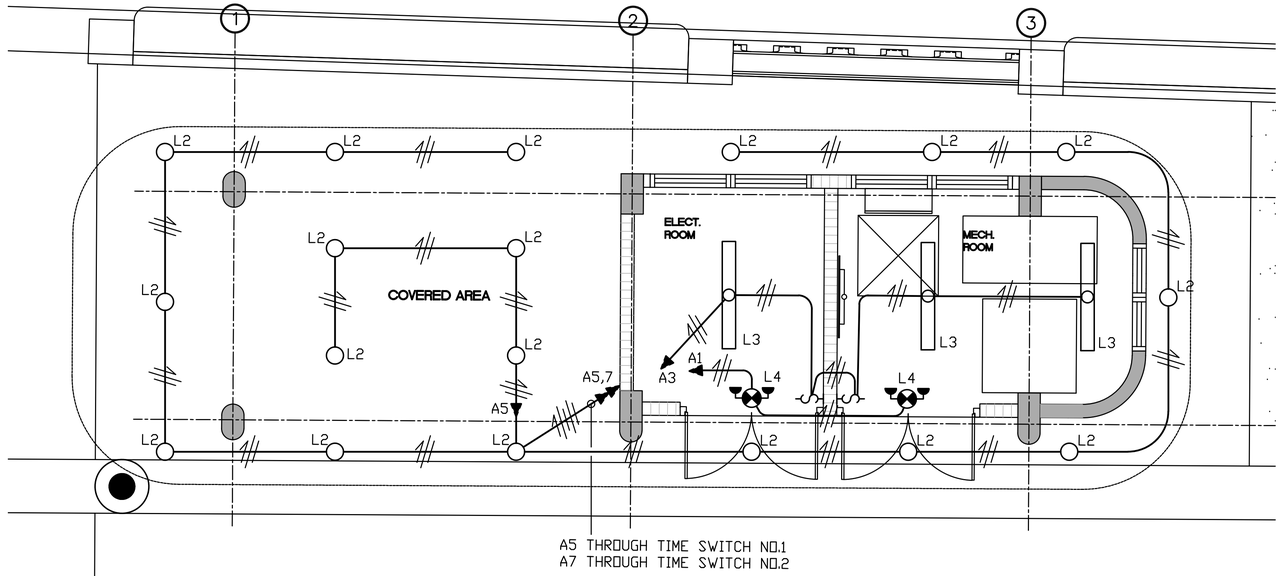

3 / E-2 ELECTRICAL & MECHANICAL ROOMS BLOW-UP-LIGHTING
SCALE: 3/8"=1'-0"

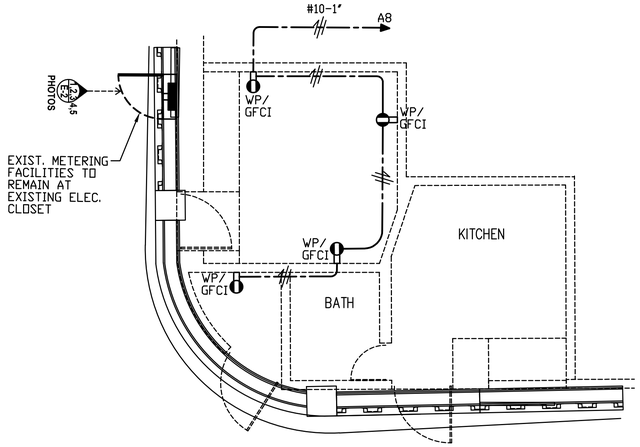

2 / E-2 KIOSK ELECTRICAL BLOW-UP-POWER
SCALE: 1/4"=1'-0"

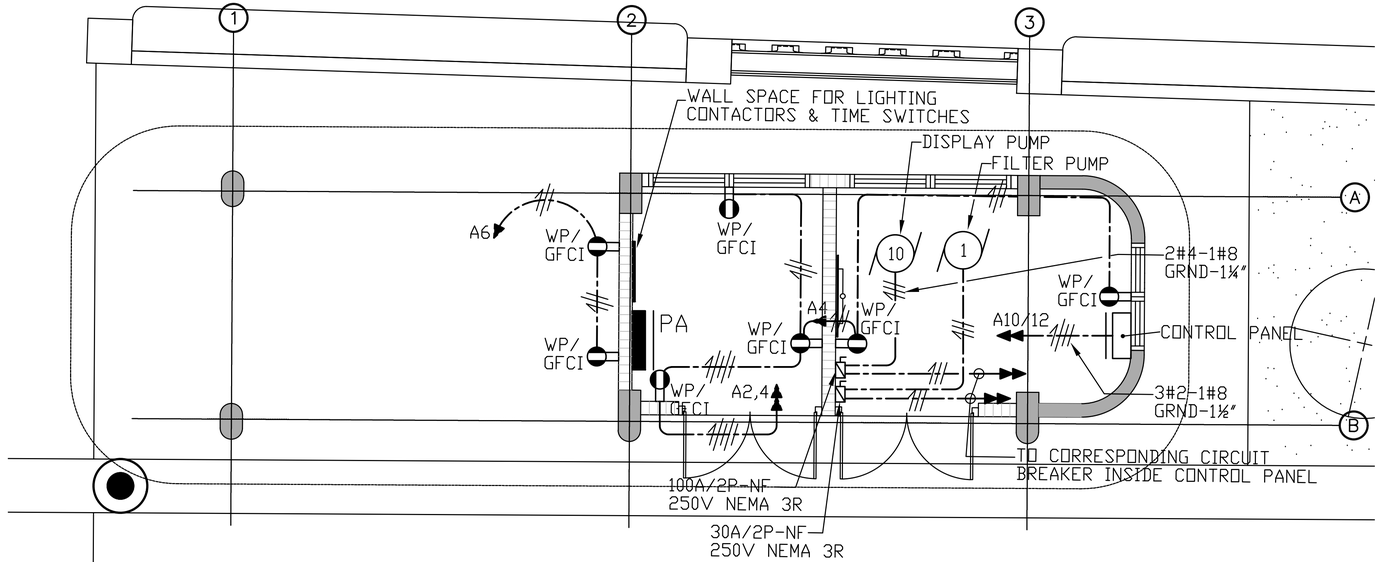

4 / E-2 ELECTRICAL & MECHANICAL ROOMS BLOW-UP-POWER
SCALE: 3/8"=1'-0"

LJV DRAWING HISTORY		LJV-DSB DESIGN STAGE	
PROJECT NO:	23-059	SCHEMATIC DWGS: (SD)	
DRAWING NO:	E-2	PRELIMINARY DWGS: (PD)	
CAD FILE:	23-059/	DESIGN DEVELOPMENT DWGS: (DD)	
CAD SUBFILE:	23-059-E002 -R00-BD	ADVANCED DWGS: (AD)	
PLOT DATE:	06.10.24	BID DWGS: (BD)	●
PLOT SCALE:	1:1	CONTRACT DWGS: (CD)	
ISSUE DATE:	06.10.24	RECORD DWGS: (RD)	
REMARKS:	NOT FOR CONSTRUCTION	-	℅
RELATED PROJECTS:	----------		

DATE	REVISIONS

REVITALIZATION OF
LUIS MUÑOZ RIVERA PLAZA
IN THE URBAN CENTER
ARECIBO, PUERTO RICO

IGLESIAS•VAZQUEZ and ASSOCIATES
320 FORTALEZA STREET 2nd FLOOR SAN JUAN, PUERTO RICO 00902 TELS. 721-4545 721-4546
ENGINEERS • ARCHITECTS • PLANNERS

SHEET TITLE:
ELECT. & MECH. ROOMS, KIOSK & FOUNTAIN AREA BLOW-UPS
SCALE: AS SHOWN

CODE NO:
08-903-

DRAWING NO:
E-2

SHEET NO:
OF
00

J:\2023\23-059 Plaza Publica Arecibo\00 Elec 2024-02-07\23-059-E002 blow-ups 1.dwg

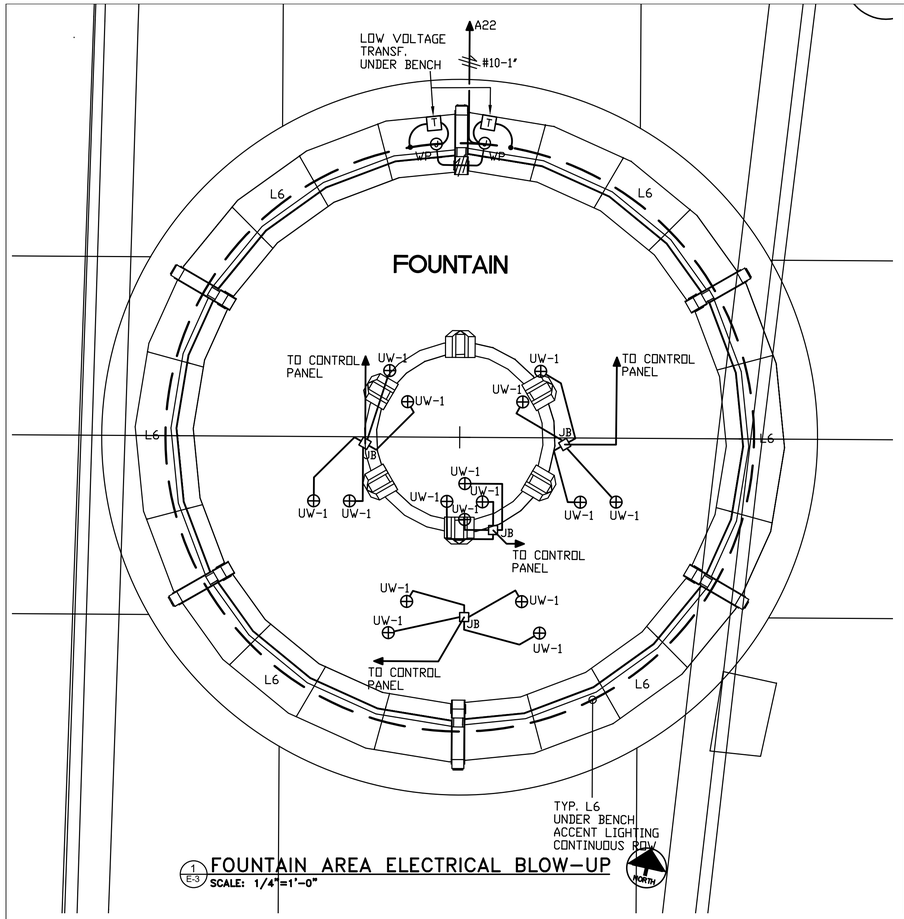

1 E-3 FOUNTAIN AREA ELECTRICAL BLOW-UP
SCALE: 1/4"=1'-0"

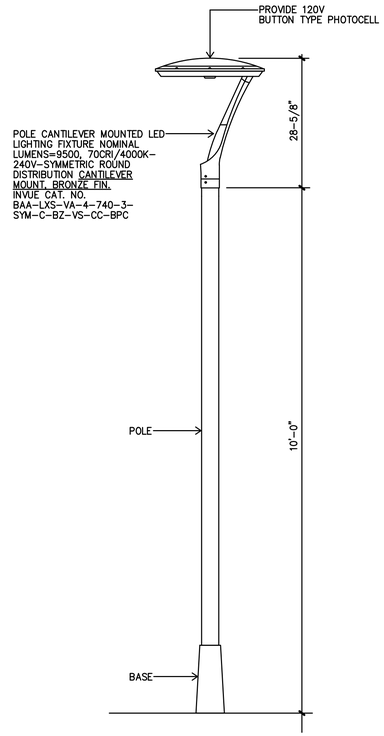

2 E-3 POLE LIGHT DETAIL-SINGLE MOUNTING
SCALE: NOT TO SCALE

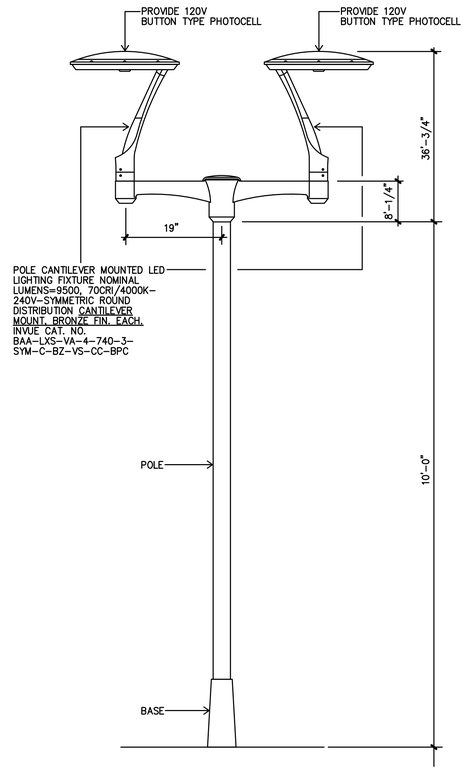

3 E-3 POLE LIGHT DETAIL-TWIN MOUNTING-180° APART
SCALE: NOT TO SCALE

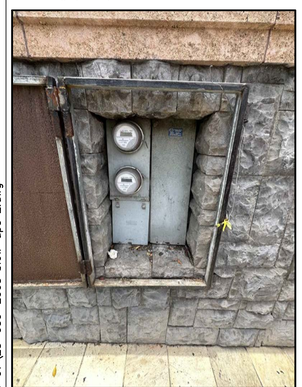

4 E-3 PHOTO #1
EXISTING METER BANK

5 E-3 PHOTO #2
EXISTING METER BANK

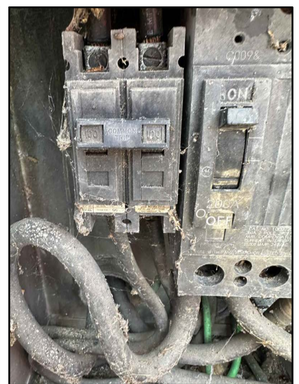

6 E-3 PHOTO #3
EXISTING METER BANK

7 E-3 PHOTO #4
EXISTING METER BANK

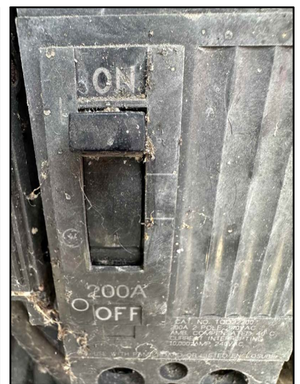

8 E-3 PHOTO #5
EXISTING METER BANK

LJV DRAWING HISTORY		LJV-DSB DESIGN STAGE	
PROJECT NO:	23-059	SCHEMATIC DWGS: (SD)	
DRAWING NO:	E-3	PRELIMINARY DWGS: (PD)	
CAD FILE:	23-059/	DESIGN DEVELOPMENT DWGS: (DD)	
CAD SUBFILE:	23-059-E003 -R00-BD	ADVANCED DWGS: (AD)	
PLOT DATE:	06.12.24	BID DWGS: (BD)	●
PLOT SCALE:	1:1	CONTRACT DWGS: (CD)	
ISSUE DATE:	06.12.24	RECORD DWGS: (RD)	
REMARKS:	NOT FOR CONSTRUCTION	-	%
RELATED PROJECTS:	----------		

DATE	REVISIONS

REVITALIZATION OF
LUIS MUÑOZ RIVERA PLAZA
IN THE URBAN CENTER
ARECIBO, PUERTO RICO

IGLESIAS • VAZQUEZ and ASSOCIATES
ENGINEERS • ARCHITECTS • PLANNERS
320 FORTALEZA STREET 2nd FLOOR SAN JUAN, PUERTO RICO 00902 TELS. 721-4545 721-4546

SHEET TITLE:
ELECT. & MECH. ROOMS, KIOSK & FOUNTAIN AREA BLOW-UPS
SCALE: AS SHOWN

CODE NO:
08-903-

DRAWING NO:
E-3

SHEET NO:
OF
00

J:\2023\23-059 Plaza Publica Arecibo\00 Elec 2024-02-07\23-059-E003 blow-ups 2.dwg

① DEMOLITION NOTES - ELECTRICAL:

1.– **GENERAL:**

AS PART OF HIS/HER BID, THE CONTRACTOR SHALL VISIT THE SITE IN ORDER TO VERIFY ALL DIMENSIONS AND EXISTING CONDITIONS AT THE PROJECT. THE CONTRACTOR IS HEREBY NOTIFIED THAT NOT ALL THE EXISTING ELEMENTS MAY HAVE BEEN INDICATED ON THE DRAWINGS AND THAT SOME EXISTING ELEMENTS MAY NOT HAVE BEEN SHOWN IN THEIR ACTUAL LOCATION. THE CONTRACTOR SHALL NOTIFY THE ARCHITECT/ ENGINEER OF ANY DISCREPANCIES BETWEEN THE EXISTING CONDITIONS AND THE CONTRACT DOCUMENTS THAT COULD AFFECT THE PROPER DEMOLITION AND CONSTRUCTION WORK SCHEDULE AND/OR PERFORMANCE.

2.– **NOTIFICATION:**

THE CONTRACTOR SHALL NOTIFY THE OWNER AT LEAST TWO (2) WEEKS PRIOR TO BEGINNING THE DEMOLITION WORK. THE CONTRACTOR SHALL COORDINATE WITH THE ARCHITECT/ENGINEER ALL THE ELEMENTS OF THE ELECTRICAL INSTALLATION THAT ARE TO BE REMOVED AND THOSE THAT ARE TO REMAIN. REFER TO ITEM NO. 12.

3.– **COMPLIANCE:**

THE CONTRACTOR MUST COMPLY WITH ALL THE CODES, STANDARDS AND REGULATIONS THAT APPLY TO DEMOLITION WORK AS WELL AS WITH THE REQUIREMENTS OF ALL THE INSURANCE COMPANIES THAT PROVIDE COVERAGE FOR THIS PROJECT.

4.– **SCHEDULING:**

THE CONTRACTOR SHALL SCHEDULE ALL DEMOLITION WORK IN A CAREFUL MANNER SO AS NOT TO INTERFERE WITH NORMAL DAILY OPERATIONS AND WITH ALL THE NECESSARY COORDINATION FOR ANY ONGOING WORK AT THE PROJECT AND AT ANY AREAS IN PRESENT USE. IN ADDITION, THE DEMOLITION WORK SHALL ALSO BE COORDINATED WITH ALL THE NEIGHBORS AND THE PUBLIC GIVING THEM ALL THE NECESSARY CONSIDERATIONS FOR THE SAFE USE OF THEIR PROPERTIES AND PUBLIC AREAS.

5.– **SAFETY:**

THE CONTRACTOR SHALL ERECT ALL THE NECESSARY SECURITY BARRIERS, FENCES, GUARD RAILS, ETC. IN ORDER TO PROVIDE THE REQUIRED LEVEL OF PROTECTION TO THE PUBLIC AND ALL PERSONNEL AT THE PROJECT SITE. THE CONTRACTOR SHALL AVOID ANY INTERFERENCE WITH THE USE OF ADJACENT BUILDINGS AND FACILITIES AS WELL AS AVOIDING RESTRICTING THE PASSAGE TO AND FROM SAID BUILDINGS AND FACILITIES. DO NOT CLOSE OR OBSTRUCT ANY STREETS OR SIDEWALKS WITHOUT PREVIOUSLY OBTAINING THE REQUIRED PERMISSION FROM ALL THE AUTHORITHIES HAVING JURISDICTION.

6.– **PROTECTION:**

THE CONTRACTOR SHALL USE ALL THE MEANS NECESSARY TO PROTECT ALL THE CONSTRUCTION MATERIALS BEFORE, DURING AND AFTER THE DEMOLITION WORK AS WELL AS ALSO PROTECTING ALL THE ELEMENTS OR THE ELECTRICAL INSTALLATION THAT ARE TO REMAIN. IN THE EVENT OF ANY DAMAGE, THE CONTRACTOR SHALL IMMEDIATELY MAKE ALL THE NECESSARY REPAIRS AND REPLACEMENTS IN ORDER TO RESTORE ALL THE DAMAGED ITEMS TO THEIR ORIGINAL CONDITIONS. ALL OF THIS WORK SHALL BE SUBJECT TO THE APPROVAL OF THE ARCHITECT/ENGINEER. THIS SHALL BE DONE AT NO ADDITIONAL COST TO THE OWNER.

7.– **DUST CONTROL:**

THE CONTRACTOR SHALL USE ALL THE NECESSARY MEANS TO CONTROL DUST ON AND NEAR THE WORK BEING CARRIED OUT. ALL SURFACES SHALL BE THOROUGHLY MOISTEN AS REQUIRED BY THE ENVIRONMENTAL QUALITY BOARD (EQB) AND THE JUNTA DE CALIDAD AMBIENTAL (JCA) IN ORDER TO PREVENT DUST FROM BECOMING A NUISANCE TO ANY BUILDING OCCUPANTS, THE PUBLIC, THE NEIGHBORS AND THE CONSTRUCTION CREW. COVER ALL EQUIPMENT AND MATERIALS AS REQUIRED IN ORDER TO PROTECT THEM FROM DUST AND DEBRIS. THE CONTRACTOR SHALL ALSO USE ALL THE NECESSARY MEANS IN ORDER TO AVOID ANY TYPE OF FLOODING THAT CAN INTERFERE WITH THE CONSTRUCTION OF THE PROJECT, THE NEIGHBORS AND THE PUBLIC.

8.– **BURNING:**

ON-SITE BURNING WILL NOT BE PERMITTED. THE USE OF EXPLOSIVES IS STRICTLY PROHIBITED.

9.– **DISPOSAL:**

THE CONTRACTOR SHALL COORDINATE WITH THE ARCHITECT/ENGINEER A LOCATION WITHIN THE LIMITS OF THE PROJECT IN WHICH TO STORE ALL THE ELEMENTS OF THE EXISTING ELECTRICAL INSTALLATION WHICH ARE INDICATED TO BE REMOVED. THE CONTRACTOR SHALL ALSO COORDINATE WITH THE OWNER OR THE APPOINTED OWNER'S REPRESENTATIVE WHICH OF SAID ELEMENTS SHALL BE TURNED OVER TO THE OWNER OR ARE TO BE DISCARDED. THOSE ELEMENTS CHOSEN TO BE RETAINED SHALL BE CLEANED AND TURNED OVER TO THE OWNER IN GOOD CONDITIONS AT THE SITE STORE LOCATION INDICATED ABOVE. NO LATER THAN EACH FRIDAY OF THE SAME WEEK THE CONTRACTOR SHALL REMOVE FROM THE SITE ALL THE MATERIALS THAT ARE TO BE DISCARDED AS WELL AS ALL THE RELATED DEBRIS. DURING THE WEEKENDS THE SITE MUST BE FREE FROM MATERIALS AND DEBRIS. THE CONTRACTOR SHALL DISPOSE LEGALLY OF SAID MATERIALS AND DEBRIS.

10.–**UTILITIES:**

THE CONTRACTOR SHALL LOCATE AL THE EXISTING POWER (FEEDERS, BRANCH CIRCUITS, CONTROL CIRCUITS, ETC.) AND TELECOMMUNICATION LINES WHICH ARE NECESSARY TO PERFORM THE WORK. THE CONTRACTOR SHALL COORDINATE WITH THE ENGINEERING DEPARTMENT OF THE VETERANS ADMINISTRATION TO MAKE SURE THAT ALL THE LINES ARE DE-ENERGIZED BEFORE PROCEEDING WITH THE REMOVAL OR RELOCATION OF SAID LINES AND ALSO TO PREVENT THE INTERRUPTION OF ANY SERVICE TO AREAS OUTSIDE OF THE LIMITS OF THE PROJECT. THE CONTRACTOR SHALL PROVIDE (FURNISH AND INSTALL) ALL THE NECESSARY LABOR AND MATERIALS, INCLUDING TEMPORARY POWER AND TELECOMMUNICATION LINES TO PREVENT SUCH INTERRUPTIONS.

11.–**SPECIAL CONDITIONS:**

IF THE PROJECT SITE AND BUILDING IS FOUND TO BE PLAGUED WITH TERMITE AND RODENT INFESTATION, COORDINATE WORK WITH THE ACTIVITIES OF THE OWNER'S EXTERMINATOR FOR EXTERMINATING WORK TO BE PERFORMED PRIOR TO DEMOLITION. IN ADDITION, IF ANY ENVIRONMENTAL HAZARD IS FOUND WITHIN THE PROJECT, NOTIFY IMMEDIATELY THE OWNER OR THE APPOINTED OWNER'S REPRESENTATIVE FOR PROPER ACTION AND/OR INSTRUCTIONS.

12.–**SCOPE OF WORK:**

a.– THE SCOPE OF WORK INCLUDES THE FURNISHING OF ALL MATERIALS, EQUIPMENT, CUTTING, EXTENDING, CONNECTING, REPAIRING, ADAPTING AND ANY OTHER WORK COINCIDENTAL HERETO. IT ALSO INCLUDES ALL THE NECESSARY TEMPORARY INSTALLATIONS TO SATISFY THE DEMOLITION PROGRAM. APPROVAL SHALL BE SECURED FROM THE ARCHITECT/ENGINEER PRIOR TO CUTTING/DRILLING ANY STRUCTURAL SUPPORT.

b.– ALL BUILDING CONSTRUCTION DESIGNATED TO REMAIN AND AFFECTED BY THE REMOVAL, RELOCATION OR INSTALLATION OF ANY PIECE OF EQUIPMENT SHALL BE REPAIRED AND FINISHED TO MATCH EXISTING CONDITIONS. IN ADDITION, WHERE OPENINGS ARE LEFT DUE TO THE REMOVAL OF DUCTS, PIPES, CONDUITS, EQUIPMENT AND APPARATUS, SAID OPENINGS SHALL BE REPAIRED OR CLOSED UP TO CORRESPOND IN MATERIAL, QUALITY, SHAPE AND FINISH WITH THAT OF SIMILAR AND ADJOINING WORK. UNLESS OTHERWISE CALLED FOR WHERE DAMAGED IS UN-REPAIRABLE, NEW ITEMS OR EQUIPMENT SHALL BE PROVIDED. CONTRACTOR SHALL PROVIDE ALL THE NECESSARY WATERPROOFING, FIRE STOPPING AND SEALING OF PENETRATIONS LEFT FROM REMOVED EQUIPMENT OR PRODUCED BY THIS WORK.

c.– BEFORE PROCEEDING WITH ANY ELECTRICAL DEMOLITION WORK, THE CONTRACTOR SHALL COMPLETELY AND FULLY DE-ENERGIZE OR COORDINATE THE DE-ENERGIZING OF THE EXISTING ELECTRICAL INSTALLATION. BOTH POWER AND TELECOMMUNICATIONS, TO BE REMOVED. A CERTIFICATION TO THIS EFFECT SHALL BE FURNISHED BY THE CONTRACTOR TO THE OWNER OR THE APPOINTED OWNER'S REPRESENTATIVE.

d.– REMOVE ALL THE EXISTING ELECTRICAL EQUIPMENT, WIRING DEVICES, COVER PLATES AND LIGHTING FIXTURES AS INDICATED ON THE DRAWINGS. THE ELECTRICAL EQUIPMENT SHALL INCLUDE BUT NOT LIMITED TO LOAD CENTERS, PANELBOARDS, DISCONNECT SWITCHES, STARTERS, MOTOR CONTROL CENTERS, SWITCHBOARDS, TRANSFORMERS, TRANSFER SWITCHES, EMERGENCY GENERATORS AND SUBSTATIONS.

e.– REMOVE ALL THE EXISTING BRANCH CIRCUIT WIRING AND FEEDERS WHICH FORM PART OF THE ELECTRICAL INSTALLATION INDICATED TO BE REMOVED.

f.– REMOVE ALL THE EXISTING EXPOSED CONDUITS RELATED TO THE ELECTRICAL DEMOLITION INDICATED ABOVE. ALL THE EXISTING CONDUITS WHICH ARE EMBEDDED IN CONCRETE WALLS, FLOORS AND CEILINGS OR IN CONCRETE BLOCK WALLS SHALL BE ABANDONED AND THEIR RELATED ELECTRICAL BOXES SHALL BE FILLED WITH CONCRETE AND PLASTERED OVER TO MATCH THE ADJOINING FINAL SURFACE CONDITIONS. REMOVE ALL THE EXISTING CONDUITS LOCATED ABOVE HUNG CEILINGS, IN FURRING WALLS AND/OR COLUMNS AND BELOW RAISED FLOORS. REMOVE ALL THEIR RELATED ELECTRICAL BOXES. THE EXISTING CONDUITS CAN ONLY BE REMOVED OR ABANDONED AFTER THEIR CORRESPONDING CONDUCTORS ARE REMOVED AND THE CONDUITS ARE EMPTY.

g.– REMOVE ALL THE EXISTING UNDERGROUND PULL BOXES, JUNCTION BOXES, AND SPLICING BOXES INDICATED TO BE REMOVED. REMOVE ALL THE EXISTING POLE BASES BELONGING TO THE POLES INDICATED TO BE REMOVED. THE OPENINGS LEFT AFTER THEIR REMOVAL SHALL BE FILLED WITH COMPACTED EARTH AND THE GROUND SURFACE SHALL BE FINISHED TO MATCH THOSE OF THE FINAL ADJOINING AREAS.

h.– MAINTAIN AND RESTORE, IF INTERRUPTED, ALL THE BRANCH CIRCUITS WIRING, FEEDERS AND TELE-COMMUNICATION LINES PASSING THROUGH RENOVATED AREAS AND SERVICING UNDISTURBED AREAS.

② GENERAL NOTES:

1 – UNLESS OTHERWISE INDICATED ALL CONDUCTORS SHALL BE #12-AWG. UP TO #10-AWG USE SOLID CONDUCTORS, ALL LARGER SIZES SHALL BE STRANDED CONDUCTORS. CONTROL CONDUCTORS TO BE #14 AWG. MINIMUM SIZE.

2 – ALL CONDUCTORS SHALL BE THWN/THHN-600V. INSULATION.

3 – UNLESS OTHERWISE INDICATED ALL CONDUCTORS SHALL BE COPPER.

4 – PROVIDE GROUND CONDUCTOR IN ALL THE CONDUITS.

5 – PROVIDE #12-AWG GREEN JUMPER BETWEEN RECEPTACLE GROUNDING SCREW AND OUTLET BOX GROUNDING SCREW.

6 – UNLESS OTHERWISE INDICATED ALL CONDUITS SHALL BE 3/4" IN DIAMETER MINIMUM.

7 – ALL UNDERGROUND CONDUIT COUPLING SHALL BE WATERTIGHT.

8 – PROVIDE AN EXPANSION JOINT COUPLING OF THE REQUIRED TYPE AND SIZE WHENEVER A CONDUIT CROSSES AN EXPANSION JOINT.

9 – PROVIDE PLASTIC CONDUIT DIVIDERS IN ALL UNDERGROUND CONDUIT RUNS. MAXIMUM DISTANCE BETWEEN DIVIDERS TO BE 4'-0'.

10 – CONTRACTOR MUST MAKE SURE THAT THE ENTIRE ELECTRICAL SYSTEM HAS GROUND CONTINUITY.

11 – ALL THE ELECTRICAL INSTALLATION SHALL BE DONE IN A NEAT & WORKMANLIKE MANNER, ACCORDING TO THE LAST EDITION OF THE NATIONAL ELECTRICAL CODE, THE LUMA ENERGY LATEST STANDARDS & THE NEGOCIADO DE TELECOMUNICACIONES LATEST PRACTICES.

12 – THE CONTRACTOR SHALL VISIT THE JOB SITE AND BECOME ACQUAINTED WITH THE EXISTING FIELD CONDITIONS. IT SHALL BE THE DIRECT RESPONSIBILITY OF THE CONTRACTOR TO BRING PROMPTLY TO THE ATTENTION OF THE ENGINEER ANY DISCREPANCIES BETWEEN THE EXISTING FIELD CONDITIONS AND THOSE THAT WERE USED FOR DESIGN PURPOSES. THIS SHALL BE DONE BEFORE THE CONTRACTOR SUBMITS HIS BID, SO THAT THE ENGINEER CAN RENDER A DECISION ON THE MATTER BEFORE THE BIDS ARE RECEIVED. THE SUBMITTAL OF THE BID BY THE CONTRACTOR WILL BE HELD AS PROOF THAT THE CONTRACTOR UNDERSTAND THROUGHLY AND COMPLETELY THE SCOPE OF THE WORK INVOLVED, HAS FAMILIARIZED HIMSELF WITH THE EXISTING FIELD CONDITIONS, AND HAS INCLUDED IN HIS BID ALL THE ITEMS NECESSARY TO PERFORM THE ELECTRICAL WORK. NO ALLOWANCE WILL BE PERMITTED ON THIS MATTER AFTER THE BIDS ARE RECEIVED.

13 – UNLESS OTHERWISE INDICATED ALL OUTLETS SHALL BE FLUSH MOUNTED AND SHALL HAVE THEIR OWN INDEPENDENT OUTLET BOXES. MINIMUM SIZE OF OUTLET BOX TO BE 4" SQUARE & 1-1/2" DEEP. EXACT SIZE OF OUTLET BOX SHALL BE DETERMINED ACCORDING TO THE MAXIMUM NUMBER OF CONDUCTORS IN THE BOX PER N.E.C. ARTICLE 370-SECTION 6.

14 – ALL INDICATED HEIGHTS ARE FROM CENTER OF BOX TO FINISHED FLOOR.

15 – CONTRACTOR SHALL BALANCE ALL LOADS.

16 – ROUTE OF CONDUITS SHOWN IN THE LAYOUT IS SCHEMATIC AND INTENDED ONLY TO INDICATE INTER-CONNECTIONS BETWEEN OUTLETS. EXACT CONDUIT ROUTING SHALL BE DETERMINED AT THE JOB SITE TO CONFORM WITH THE STRUCTURAL CONDITIONS AND SHALL BE SUBJECT TO THE FINAL APPROVAL OF THE ARCHITECT/ENGINEER.

17 – LEAVE A #12-AWG-TW FISHWIRE IN ALL EMPTY CONDUITS.

18 – ALL PANELBOARDS AND LOAD CENTERS SHALL BE PROVIDED WITH A FACTORY INSTALLED GROUND BUS FOR CONNECTING TO GROUND ALL THE GROUND WIRES OR CABLES ENTERING OR LEAVING THE PANELBOARD. THE GROUND BUS SHALL BE SIMILAR IN SIZE AND CHARACTERISTICS TO THE NEUTRAL BUS. ALL PANELBOARDS SHALL HAVE A MONOFLAT FRONT AND KEY LOCK.

19 – WHEN TWO OR MORE WIRING DEVICES ARE SHOWN TOGETHER IN ADJACENT POSITIONS AND AT THE SAME HEIGHT, THEY SHALL BE INSTALLED IN A MULTIPLE GANG OUTLET BOX OF THE PROPER SIZE SO THAT ONLY ONE RAISED COVER PLATE OF THE REQUIRED TYPE AND SIZE ARE USED.

20 – UNLESS OTHERWISE INDICATED, ALL WIRING DEVICES SHALL BE WHITE COLORED WITH 302 STAINLESS STEEL COVER PLATES, EXCEPT THE WEATHERPROOF OUTLETS WHICH SHALL HAVE THEIR STANDARD GRAY COVER PLATES.

21 – WHEN TWO OR MORE PANELBOARDS OR CABINETS ARE SHOWN TOGETHER IN ADJACENT LOCATIONS, THE TOP OF ALL PANELBOARDS OR CABINETS SHALL BE ALIGNED WITH THE TOP OF THE BIGGEST ONE SO THAT ALL THE TOPS ARE AT EXACTLY THE SAME HEIGHT FROM THE FINISHED FLOOR.

22 – IN CONDUIT RUNS, THE NUMBER OF ARROWS DESIGNATE THE NUMBER OF CIRCUITS IN THE CONDUIT (ONE POLE IN THE PANELBOARD PER EACH CIRCUIT), THE NUMBER OF LINES DESIGNATE THE NUMBER OF CONDUCTORS IN THE CONDUIT , THE LONGER LINE BEING A NEUTRAL CONDUCTOR AND " / " BEING THE GROUND CONDUCTOR.

23 – CI / L1 / 1 ◯ IN LIGHTING OUTLET, C1 INDICATES THE CIRCUIT NUMBER, L1 INDICATES THE LUMINARY TYPE FROM THE LUMINARY SCHEDULE AND 1 INDICATES THE SWITCH CONTROLLING UNIT.
C3 IN RECEPTACLE OUTLET, C3 INDICATES THE CIRCUIT NUMBER.

24 – TELEPHONE TERMINALS CABINET SHALL BE APPROVED EQUAL TO COLUMBIA METAL TYPE "PF" WITH THE DOOR HINGES, LOCK AND 3/4" PLYWOOD BACKBOARD COVER AT THE BOTTOM OF THE CABINET.

25 – IT SHALL BE THE RESPONSIBILITY OF THE CONTRACTOR TO VERIFY THE VOLTAGE CHARACTERISTICS AT THE SITE WITH THE UTILITY COMPANY AT THE TIME OF INSTALLATION BEFORE ORDERING ANY PRIMARY EQUIPMENT.

26 – ALL WIRING DEVICES SHALL BE SPECIFICATION GRADE.

27 – ALL THE SELF-STANDING AND SURFACE MOUNTED ELECTRICAL EQUIPMENT AS WELL AS THE LUMINARIES SHALL ALL BE BRACED FOR SEISMIC SHOCK ACCORDING TO THE SEISMIC RESTRAINT MANUAL GUIDELINES FOR MECHANICAL SYSTEMS. THE SAME APPLIES TO ALL THE CONDUIT WORK. THE DETAILS AND INSTALLATION METHODS IN SAID MANUAL SHALL BE MODIFIED AS REQUIRED TO FIT THE ELECTRICAL INSTALLATION OF THE PROJECT.

28 – FOR FINAL LOCATION OF MECHANICAL EQUIPMENT SEE CORRESPONDING MECHANICAL AND ARCHITECTURAL DRAWINGS. CONTRACTOR TO RELOCATE ELECTRICAL ROUGH-IN ACCORDINGLY AT NO ADDITIONAL COST TO OWNER.

29 – CONDUIT WORK:

A – ALL CONDUITS INSTALLED UNDERGROUND SHALL BE PVC SCH. 40.

B – ALL CONDUITS INSTALLED EMBEDED IN FLOOR SLABS WHICH ARE IN DIRECT CONTACT WITH THE EARTH SHALL BE PVC SCH. 40.

C – ALL CONDUITS INSTALLED EMBEDED IN WALLS, CEILING SLABS AND IN FLOOR SLABS WHICH ARE NOT IN DIRECT CONTACT WITH THE EARTH SHALL BE EMT.

D – ALL CONDUITS INSTALLED IN THE AREA BETWEEN HUNG CEILINGS AND CEILING SLABS OR METAL DECKS SHALL BE EMT.

E – ALL CONDUITS INSTALLED EXPOSED IN INDOOR AREAS SHALL BE EMT.

F – ALL CONDUITS INSTALLED EXPOSED IN OUTDOOR AREAS SHALL BE PVC COATED HEAVY WALL RIGID GALVANIZED STEEL.

G – FINAL CONNECTIONS TO ALL MOTORS AND ELECTRICAL EQUIPMENT SHALL BE DONE WITH LIQUIDTIGHT FLEXIBLE STEEL CONDUIT.

H – 'ENT' CONDUIT IS NOT ALLOWED IN THIS PROJECT.

30 – ALL CONDUCTORS SHALL BE #12-AWG, EXCEPT WHEN OTHERWISE INDICATED IN THE DRAWINGS OR AS INDICATED BELOW FOR 20 AMPS. CKTS. CONDUCTOR SIZING.

1 – ALL 20 AMP. 120VOLT CIRCUIT RUNS SHALL BE AS FOLLOWS:
5' TO 100' IN LENGTH, #12-AWG.
100' TO 200' IN LENGTH, #10-AWG.
200' TO 300' IN LENGTH, #8-AWG.
300' TO 400' IN LENGTH, #6-AWG.

31 – ALL PENDANT MOUNTED LUMINARIES SHALL BE INSTALLED USING STEMS, 2 STEMS PER EACH 4' LUMINARY. STEMS SHALL BE PAINTED OF THE COLOR REQUIRED BY THE ARCHITECT.

32 – ALL DIMMERS SHALL BE OF THE SLIDE TYPE.

33 – THE ELECTRICAL CONTRACTOR SHALL PROVIDE ALL THE POWER AND CONTROL INTERCONNECTIONS AMONG ALL THE DIFFERENT PARTS OF THE AIR CONDITIONING SYSTEMS (FAN COILS/AHU'S, CONDENSING UNITS, THERMOSTATS, ETC.). THE CONTRACTOR SHALL ALSO PROVIDE ALL THE STARTING AND DISCONNECT EQUIPMENT FOR SAID SYSTEMS.

34 – ALL 15A OR 20A/1P-125V. RECEPTACLES LOCATED OUTDOORS SHALL BE PROVIDED WITH INTEGRAL GROUND FAULT PROTECTION AND WEATHERPROOF COVER PLATES.

35 – ALL THE SMOKE DETECTORS SHALL BE INTERCONNECTED SO THAT IF ONE SMOKE DETECTOR IS ACTIVATED ALL THE SMOKE DETECTORS WILL SOUND THE ALARM.

36 – ALL FLOOR OUTLETS SHALL BE PROVIDED WITH PVC FLOOR BOXES AND GASKETED FLUSH BRONZE COVER PLATES.

③ LEGEND

SYMBOL	DESCRIPTION
○	CEILING LIGHTING OUTLET.
	SURFACE MOUNTED LED LUMINARY.
	SURFACE MOUNTED EMERGENCY EXIT LUMINARY.
	WALL MOUNTED EMERGENCY LUMINARY, 7'-0" A.F.F. UNLESS OTHERWISE INDICATED IN THE DRAWINGS.
	SINGLE POLE SWITCH, 20 AMPS, 125/277 VOLTS, 48" A.F.F.
	DUPLEX GROUNDING POWER OUTLET, 20 AMPS, 125 VOLTS, 1'-6" A.F.F.
	PANELBOARD, CENTER LINE AT 5'-0" A.F.F. SEE ELECTRICAL DRAWINGS FOR DETAILS.
	MOTOR (HP).
E	EXHAUST FAN OUTLET, SEE MECHANICAL AND ARCHITECTURAL DRAWINGS FOR EXACT LOCATION.
WP	WEATHERPROOF COVER PLATE TO BE PROVIDED IN ALL OUTLETS THIS SYMBOL IS SHOWN ADJACENT TO.
GF	INTEGRAL GROUND FAULT PROTECTION TO BE PROVIDED IN ALL RECEPTACLES THIS SYMBOL IS SHOWN ADJACENT TO.
———	CONDUIT INSTALLED IN THE CEILING SLAB.
—— ——	CONDUIT INSTALLED BETWEEN THE HUNG CEILING AND THE CEILING SLAB.
—— - ——	CONDUIT INSTALLED IN THE FLOOR SLAB.
— — — —	CONDUIT INSTALLED IN WALL.
——X——	CONDUIT INSTALLED EXPOSED.
——•——	CONDUIT INSTALLED UNDERGROUND.

1 / E-4 **SECTION**
NOT TO SCALE

④ PANELBOARD SCHEDULE

PANELBOARD DESIGNATION : PA

120/240 VOLTS 1 PH. 3 WIRES • SOLID NEUTRAL 225 AMPERES BUS BARS 22000 AMPS. SYM. INT. CAP.
MAINS: -- AMPS. MAIN LUGS, 200 AMPS. MAIN CIRCUIT BREAKER 2 POLES 250 VOLTS, GRND. BAR •
MOUNTING: • FLUSH -- SURFACE, FED FROM: -- TOP • BOTTOM, LOCATION: ELECTRICAL ROOM
NEMA TYPE: I MANUFACTURER: SQUARE D - NQ

CKT NO.	DESCRIPTION	AMPS	BKR	A	B	BKR	AMPS	DESCRIPTION	CKT No.
1	EMERGENCY EXIT LIGHTS	1	*	4			3	ELECTRICAL ROOM RECEPTACLES	2
3	ELEC. & MECH. ROOM LIGHTS	2			4		2	MECHANICAL ROOM RECEPTACLES	4
5	EXTERIOR BUILDING LIGHTS	2		5			3	COVERED AREA RECEPTACLES	6
7	EXTERIOR BUILDING LIGHTS	3			6		3	STORAGE RECEPTACLES	8
9	STORAGE & KITCHEN LIGHTS	2		60		100A	58	FOUNTAIN CONTROL PANEL	10
11	SCULPTURE PERIMETER POLE LIGHTS	3	20A		61		58		12
13		3		3		20A	.	CENTRAL AREA POLE LTS.	14
15	PERIPHERY PLAZA LIGHTING	4	20A		4		.		16
17		4		8			4	SCULPTURE LTG.	18
19	PERIPHERY PLAZA LIGHTING	4	20A		6		2	STATUE LTG.	20
21		4		8			4	UNDER BENCH CONTINUOUS ACCENT LTG.	22
23	SIDEWALK LIGHTING	6	20A		6		.	SPARE	24
25		6		6			.	SPARE	26
27	SIDEWALK LIGHTING	6	20A		6		.	SPARE	28
29		6		6			.	SPACE	30
31	FOUNTAIN LIGHTS	6			6		.	SPACE	32
33	SPACE	.		.			.	SPACE	34
35	SPACE	.			.		.	SPACE	36
37	SPACE	.		.			.	SPACE	38
39	SPACE	.			.		.	SPACE	40
41	SPACE	.		.			.	SPACE	42

SPECIAL FEATURES:	AMPS. SUB TOTALS	SPECIAL FEATURES:
--- COLUMN WIDTH TYPE PANEL	100 | 99	___ ISOLATED GROUND BAR
--- TWO SECTIONS PANEL	NOTES:	* LOCK-ON DEVICE
___ FEED-THRU TYPE PANEL	1-ALL BREAKERS TO BE 20A, UNLESS OTHERWISE NOTED.	▲ GROUND FAULT TYPE BREAKER
___ LIGHTING CONTACTOR PANEL	2-PROVIDE WITH HINGED DOOR & DOOR LOCK WITH KEY.	• "BOLT-ON" TYPE BREAKERS
• MONOFLAT FRONT	3-	___ OUTDOOR CONSTRUCTION
• EXTRA WIDE GUTTERS		___ STAINLESS STEEL CONSTRUCTION
___ SPLIT BUS		• DOOR-IN-DOOR FRONT
• COPPER BUS BARS	STD. NO. : LJVPS-2	___

The Office of LEONARDO J. VIDAL Consulting Engineers
Lic. no. 6092
P.O. Box 363164, San Juan. P.R. 00936-3164
Tels.: (787) 765-5631, Fax.: (787) 765-7399
Email: oficinaljv@gmail.com

LJV DRAWING HISTORY		LJV-DSB DESIGN STAGE	
PROJECT NO:	23-059	SCHEMATIC DWGS: (SD)	
DRAWING NO:	E-4	PRELIMINARY DWGS: (PD)	
CAD FILE:	23-059/	DESIGN DEVELOPMENT DWGS: (DD)	
CAD SUBFILE:	23-059-E004 -R00-BD	ADVANCED DWGS: (AD)	
PLOT DATE:	06.10.24	BID DWGS: (BD)	●
PLOT SCALE:	1:1	CONTRACT DWGS: (CD)	
ISSUE DATE:	06.10.24	RECORD DWGS: (RD)	
REMARKS:	NOT FOR CONSTRUCTION	-	%
RELATED PROJECTS:	------------------------------		

DATE	REVISIONS

REVITALIZATION OF LUIS MUÑOZ RIVERA PLAZA IN THE URBAN CENTER
ARECIBO, PUERTO RICO

IGLESIAS • VAZQUEZ and ASSOCIATES
320 FORTALEZA STREET 2nd FLOOR SAN JUAN, PUERTO RICO 00902 TELS. 721-4545 721-4546
ENGINEERS · ARCHITECTS · PLANNERS

SHEET TITLE:
NOTES, LEGEND & DETAIL
SCALE: AS SHOWN

CODE NO: 08-903-

DRAWING NO: E-4

SHEET NO: OF 00

① LUMINARY SCHEDULE

DESIGNATION	LIGHT SOURCE TYPE	DESCRIPTION	MOUNTING	VOLTS	DRIVER	LED					TOTAL WATTS	MANUFACTURER	CATALOG NO.	REMARKS NO.
						CRI	°K	WATTS	LUMENS	EFFICIENCY				
L1	LED	WRAPAROUND	CEILING	120	ELEC.	70	4000	43.8	4424	101	43.8	METALUX	4WSNLED-LD4-44SL-F-UNV-L840-CD-I-U	1,2
L2	LED	CANOPY LTG. FIXTURE	CEILING	120	ELEC.	70	4000	56	7320	129.11	56	LUMARK	CLCS-55-SM-UNV	1
L3	LED	INDUSTRIAL	CEILING	120	ELEC.	70	4000	33.5	3484	104	33.5	FAIL SAFE	HVSL4-4-LD4-I-STD-40-UNV-0-EDC1	3
L4	LED	COMBINATION EXIT/EMERG.	CEILING	120	ELEC.	--	---	1	---	---	1	AMERICAN LITE	LEDCXTEU-2-R-W-STD	
L5	LED	EMERGENCY	WALL	120	ELEC.	--	---	1.2	205	---	1.2	AMERICAN LITE	LEDR5-120V-W-STD	
L6	LED	LINEAR LIGHT STRIP	UNDER BENCH	120	ELEC.	80	3000	4.2W/FT	113LM/FT	109	114	DURAFLEX	DFA-SB-42-0-30-24	4
FL1	LED	FLOODLIGHT	SURFACE	120	ELEC.	80	4000	100	12483	124.8	100	TARGETTI	KPLM-41-HE-SP-L2-40-1E2525-1DU2521-1DU2530-1T1711-1E2523	
FL2	LED	FLOODLIGHT	SURFACE	120	ELEC.	80	4000	14	1419	14	101	TARGETTI	KPLM-41-HE-FL-L2-30-1E2525-1DU2521-1DU2530-1T1711-1E2523	
UW-1	LED	UNDERGROUND	INGROUND	120	ELEC.	80	3000	14	1420	101	14	TARGETTI KEPLERD	KEPLERD MINI-41-HE-FL-12-30	

② LUMINARY SCHEDULE REMARKS

VALS-1

NO.	DESCRIPTION
1	SURFACE MOUNT
2	DIMMING DRIVER
3	VANDAL RESISTANT, MATE WHITE FINISH
4	4.2W/FT

③ TIME SWITCHES SCHEDULE

VATSS 1

DESIGNATION	VOLTS	POLES	AMPS/POLE	NEMA TYPE	MOUNTING	BATTERY BACK-UP	DAY-OMITTING DEVICE	ON	OFF	MANUFACTURER	CATALOG NUMBER	REMARKS	CONTROL CIRCUITS		
													PANEL DESIGNATION	CIRCUITS NUMBER	LOCATION
TS-1	120	3PST	40	1	SURFACE	●	●	AS REQUIRED BY OWNER		TORK	7300ZL	CONTROLS LIGHTING CONTACTOR LC1	PA	A15/17	PERIMETER AREA LTG.
TS-2	120	3PST	40	1	SURFACE	●	●			TORK	7300ZL	CONTROLS LIGHTING CONTACTOR LC2	PA	A19/21	PERIMETER AREA LTG.
TS-3	120	3PST	40	1	SURFACE	●	●			TORK	7300ZL	CONTROLS LIGHTING CONTACTOR LC3	PA	A11/13	CENTRAL AREA LTG.
.						●	●								
.						●	●								

④ LIGHTING CONTACTORS SCHEDULE

VALCS-1

DESIGNATION	VOLTS	POLES			AMPS/POLE	NEMA TYPE	HOLDING		CONTROL TRANSF.	CONTROL DEVICE				MANUFACTURER	CATALOG NO.	REMARKS NO.	LOCATION	CONTROLLED LOADS	
		ACTIVE	SPARE	TOTAL			ELEC.	MECH.		HAND-OFF-AUTO SELECTOR SWITCH	ON/OFF PUSH-BUTTON	OTHERS, SEE REMARKS						PANEL DESIGNATION	CIRCUITS NUMBER
LC1	250	6	–	6	30	1	●	–	●	●	--	--		SQUARE D	8903-LG60-V03-C-FF4T-P1	1	ELEC ROOM	PA	A15/17
LC2	250	6	–	6	30	1	●	–	●	●	--	--		SQUARE D	8903-LG60-V03-C-FF4T-P1	2	ELEC ROOM	PA	A19/21
LC3	250	6	–	6	30	1	●	–	●	●	--	--		SQUARE D	8903-LG60-V03-C-FF4T-P1	3	ELEC ROOM	PA	A11/13
.	.	.	.	.	.	.	.	.	.					.	.	.	.	.	.
.	.	.	.	.	.	.	.	.	.					.	.	.	.	.	.

⑤ LIGHTING CONTACTORS SCHEDULE - REMARKS

NUMBER	DESCRIPTION
1	CONTROLS PERIMETER AREA POLE LTS.
2	CONTROLS PERIMETER AREA POLE LTS.
3	CONTROLS CENTRAL AREA POLE LTS.
4	.
5	.
6	.
7	.

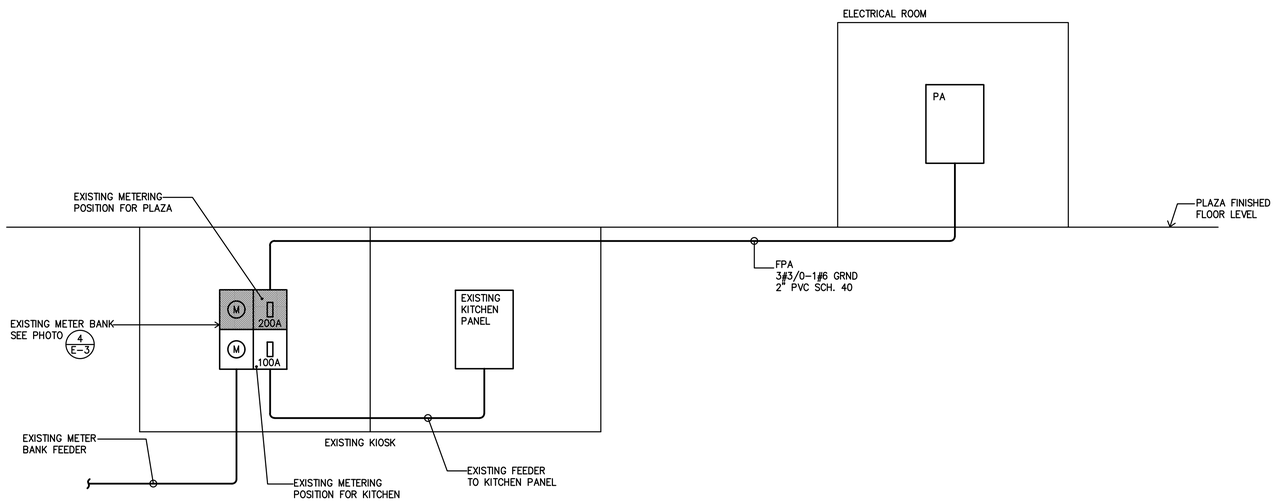

ONE LINE DIAGRAM

NOT TO SCALE

LJV DRAWING HISTORY		LJV-DSB DESIGN STAGE	
PROJECT NO:	23-059	SCHEMATIC DWGS: (SD)	
DRAWING NO:	E-5	PRELIMINARY DWGS: (PD)	
CAD FILE:	23-059/	DESIGN DEVELOPMENT DWGS: (DD)	
CAD SUBFILE:	23-059-E005 -R00-BD	ADVANCED DWGS: (AD)	
PLOT DATE:	06.10.24	BID DWGS: (BD)	●
PLOT SCALE:	1:1	CONTRACT DWGS: (CD)	
ISSUE DATE:	06.10.24	RECORD DWGS: (RD)	
REMARKS:	NOT FOR CONSTRUCTION	–	%
RELATED PROJECTS:	----------		

DATE	REVISIONS

The Office of LEONARDO J. VIDAL Consulting Engineers
P.O. Box 363748, San Juan, P.R. 00936-3748
Tels. (787) 765-3833, Fax. (787) 765-1388
E-mail: vidalleo@gmail.com
Lic. No. 6006

REVITALIZATION OF
LUIS MUÑOZ RIVERA PLAZA
IN THE URBAN CENTER
ARECIBO, PUERTO RICO

IGLESIAS • VAZQUEZ and ASSOCIATES
ENGINEERS • ARCHITECTS • PLANNERS
320 FORTALEZA STREET 2nd FLOOR SAN JUAN, PUERTO RICO 00902 TELS. 721-4545 721-4546

SHEET TITLE: LUMINARY & TIME SWITCHES SCHEDULES
SCALE: AS SHOWN

CODE NO: 08-903-

DRAWING NO: E-5

SHEET NO: OF 00

J:\2023\23-059 Plaza Publica Arecibo\00 Elec 2024-02-07\23-059-E005 schedules.dwg

PR-CRP-000771

Revitalization of Plaza Luis Muñoz Rivera in the Urban Center Project

Arecibo, Puerto Rico

Design Alternative 1

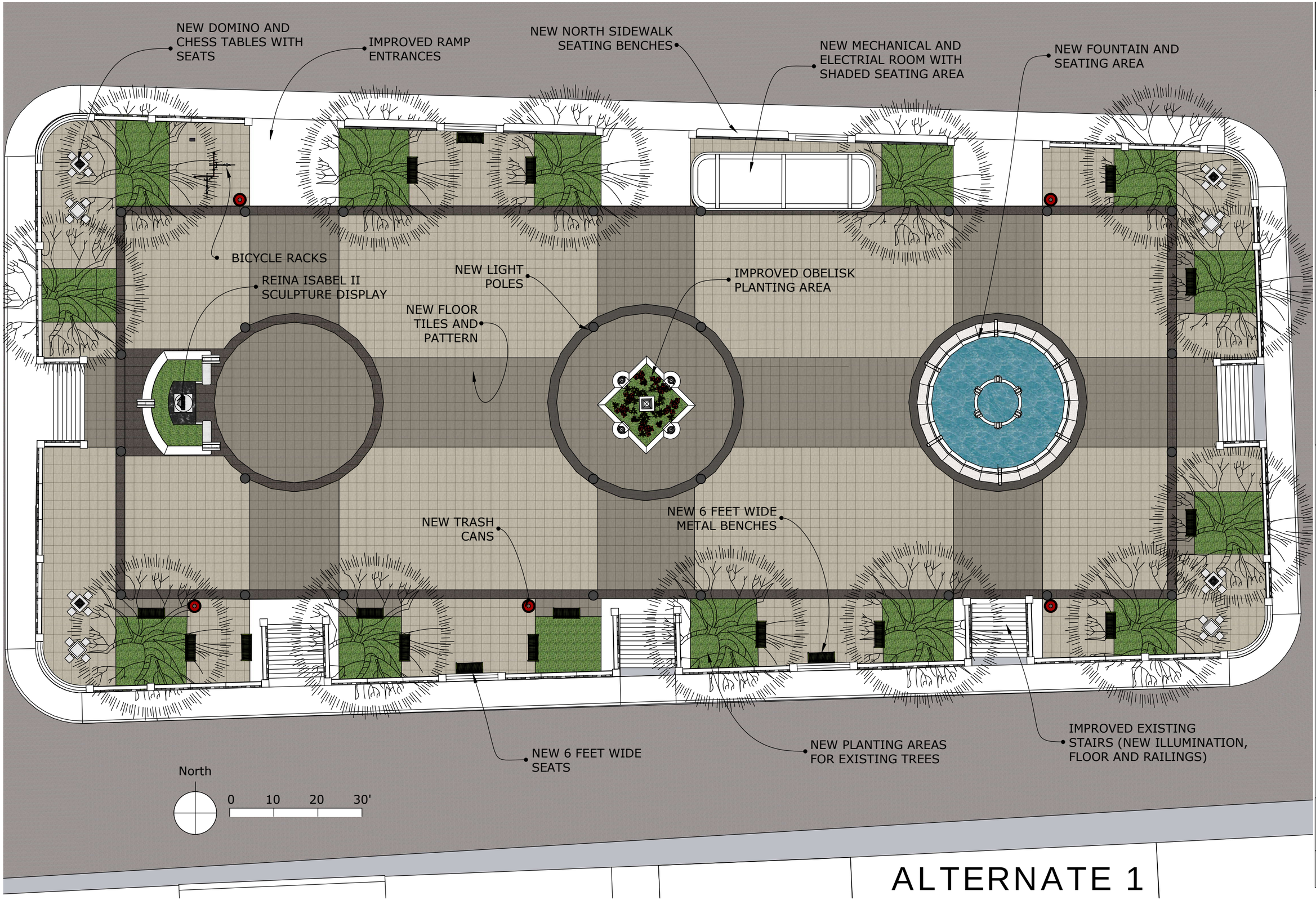

ALTERNATE 1

IVAPR.COM

REVITALIZATION OF LUIS MUÑOZ RIVERA PLAZA IN URBAN CENTER

PLAN VIEW WITH LEGEND OF PROPOSED REVITALIZATION

A-1

IVAPR.COM

REVITALIZATION OF LUIS MUÑOZ RIVERA PLAZA IN URBAN CENTER

PERSPECTIVE VIEW OF PROPOSED REVITALIZATION
LOOKING FROM THE NORTH WEST

A-2

IVAPR.COM

REVITALIZATION OF LUIS MUÑOZ RIVERA PLAZA IN URBAN CENTER

PERSPECTIVE VIEW OF PROPOSED REVITALIZATION
LOOKING FROM THE SOUTH WEST

A-3

IVAPR.COM

REVITALIZATION OF LUIS MUÑOZ RIVERA PLAZA IN URBAN CENTER

PERSPECTIVE VIEW OF PROPOSED REVITALIZATION
LOOKING FROM THE SOUTH

A-4

IVAPR.COM

REVITALIZATION OF LUIS MUÑOZ RIVERA PLAZA IN URBAN CENTER

PERSPECTIVE VIEW OF PROPOSED REVITALIZATION
LOOKING FROM THE SOUTH EAST

A-5

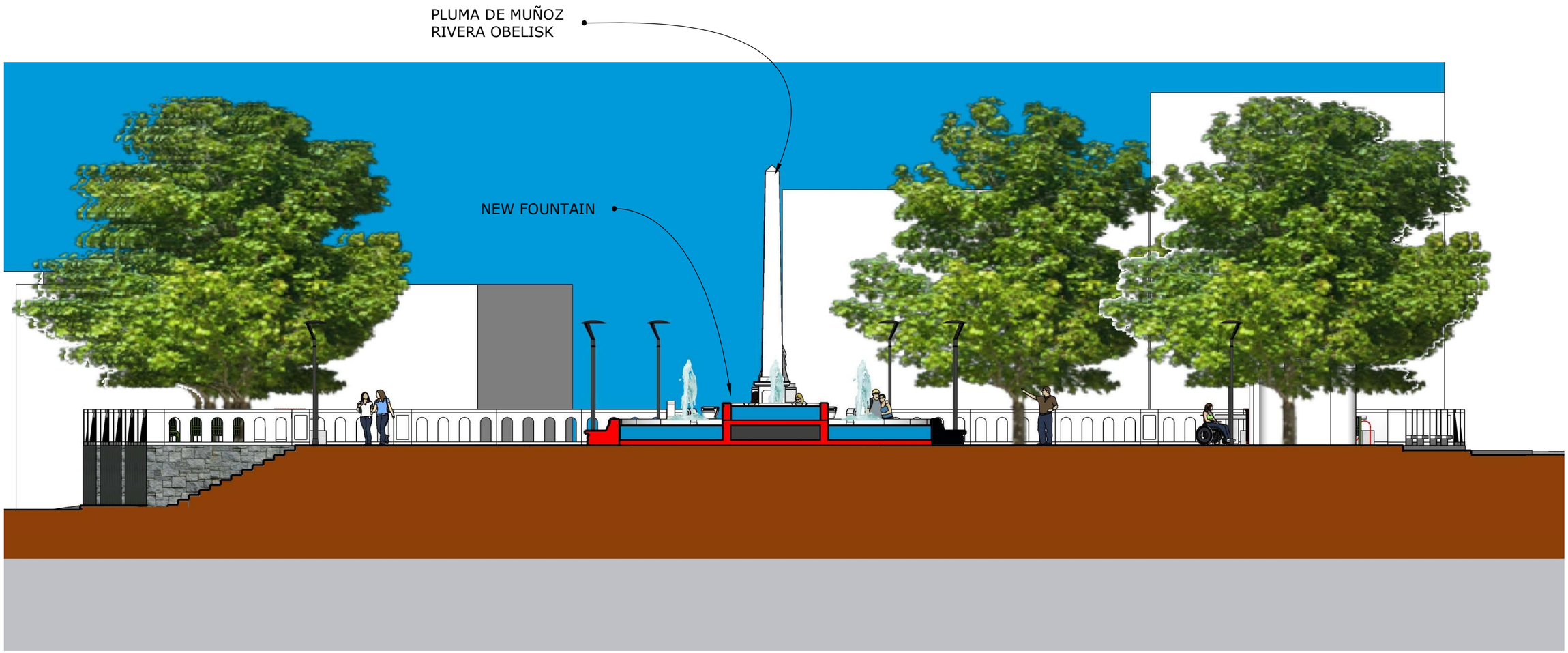

IVAPR.COM

**REVITALIZATION OF LUIS MUÑOZ RIVERA
PLAZA IN URBAN CENTER**

TRANSVERSAL SECTION VIEW THRU FOUNTAIN
LOOKING FROM THE EAST TOWARDS THE WEST

A-6

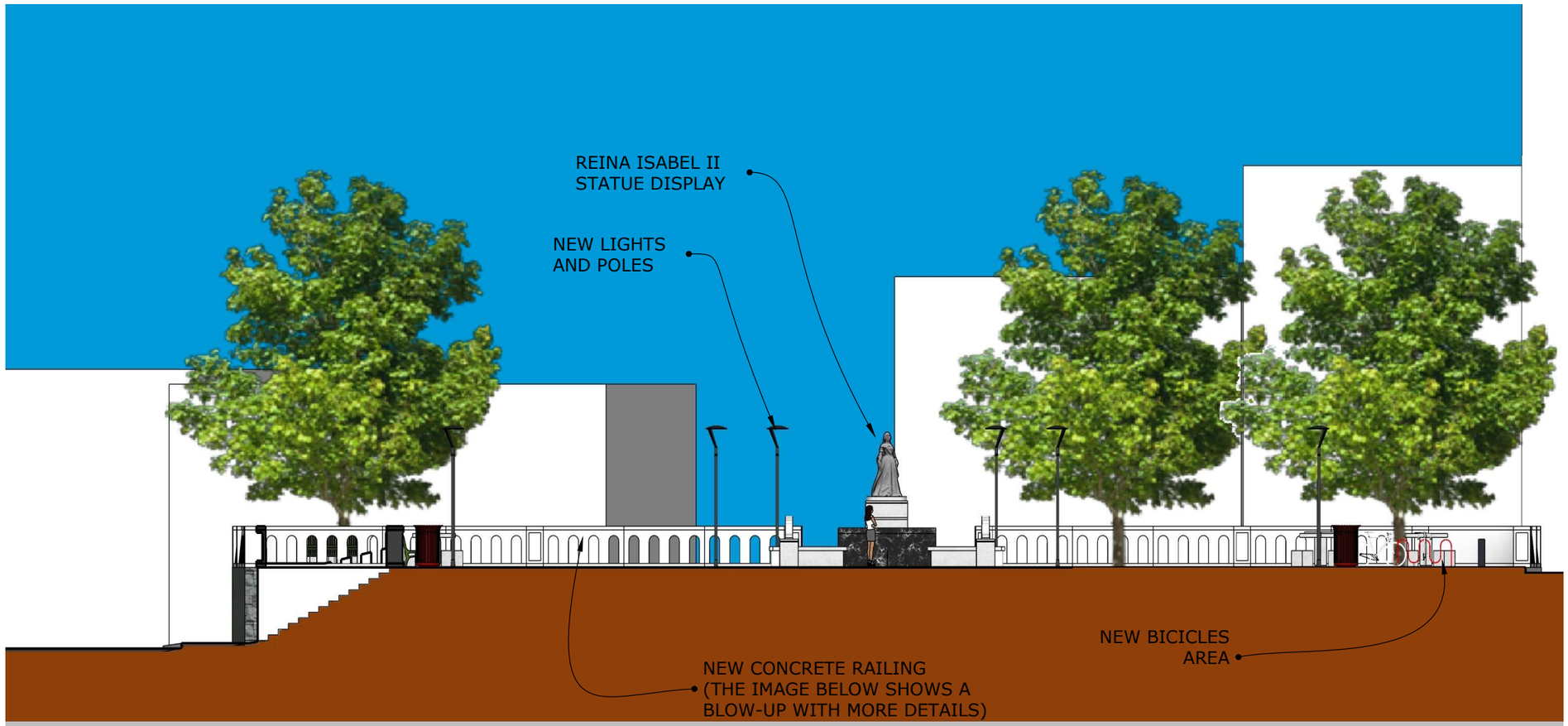

THE IMAGES AT THE LEFT AND RIGHT SHOW THE PROPOSED LUMINARIE (LEFT) AND POLE BASE (RIGHT). THE LUMINARIES CHOSEN COMPLY WITH ALL CURRENT DARK SKY ILLUMINATION REQIREMENTS.

IVAPR.COM

REVITALIZATION OF LUIS MUÑOZ RIVERA
PLAZA IN URBAN CENTER

TRANSVERSAL SECTION VIEW LOOKING FROM THE
EAST TOWARDS THE REINA ISABEL II STATUE

A-7

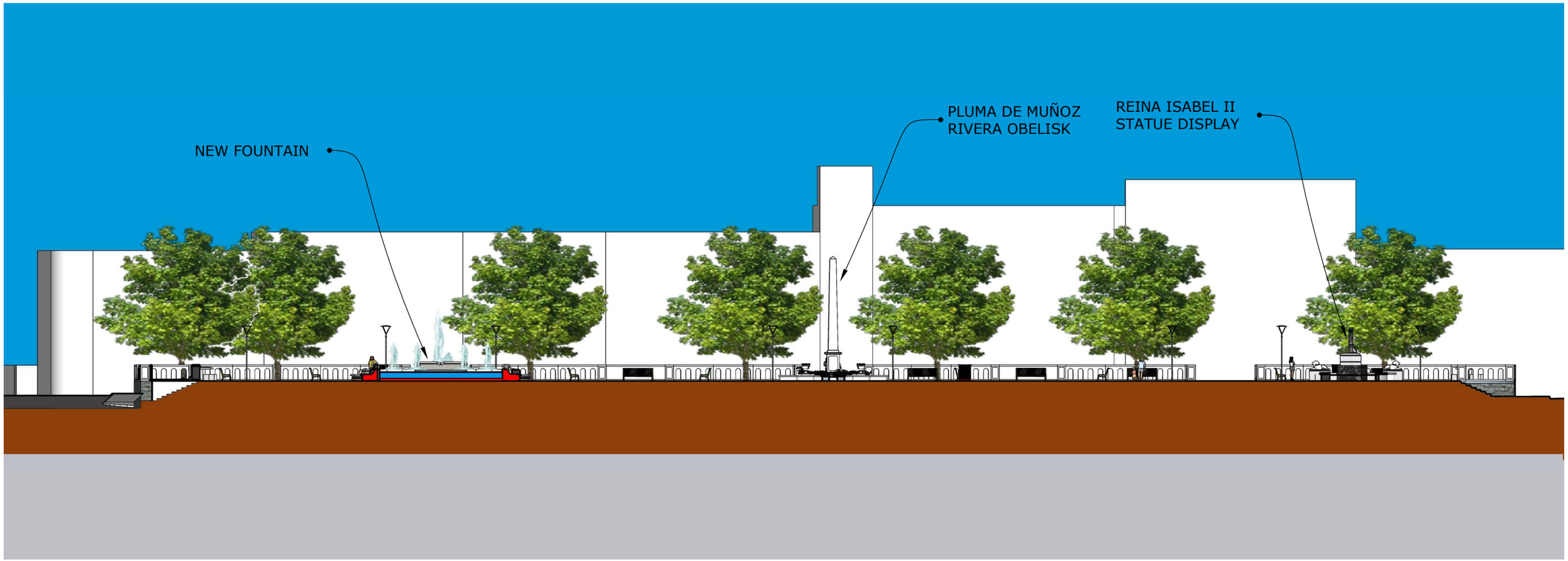

IVAPR.COM

REVITALIZATION OF LUIS MUÑOZ RIVERA PLAZA IN URBAN CENTER

LONGITUDINAL SECTION VIEW THRU THE CENTER OF THE PLAZA LOOKING TOWARDS THE SOUTH

PER-12

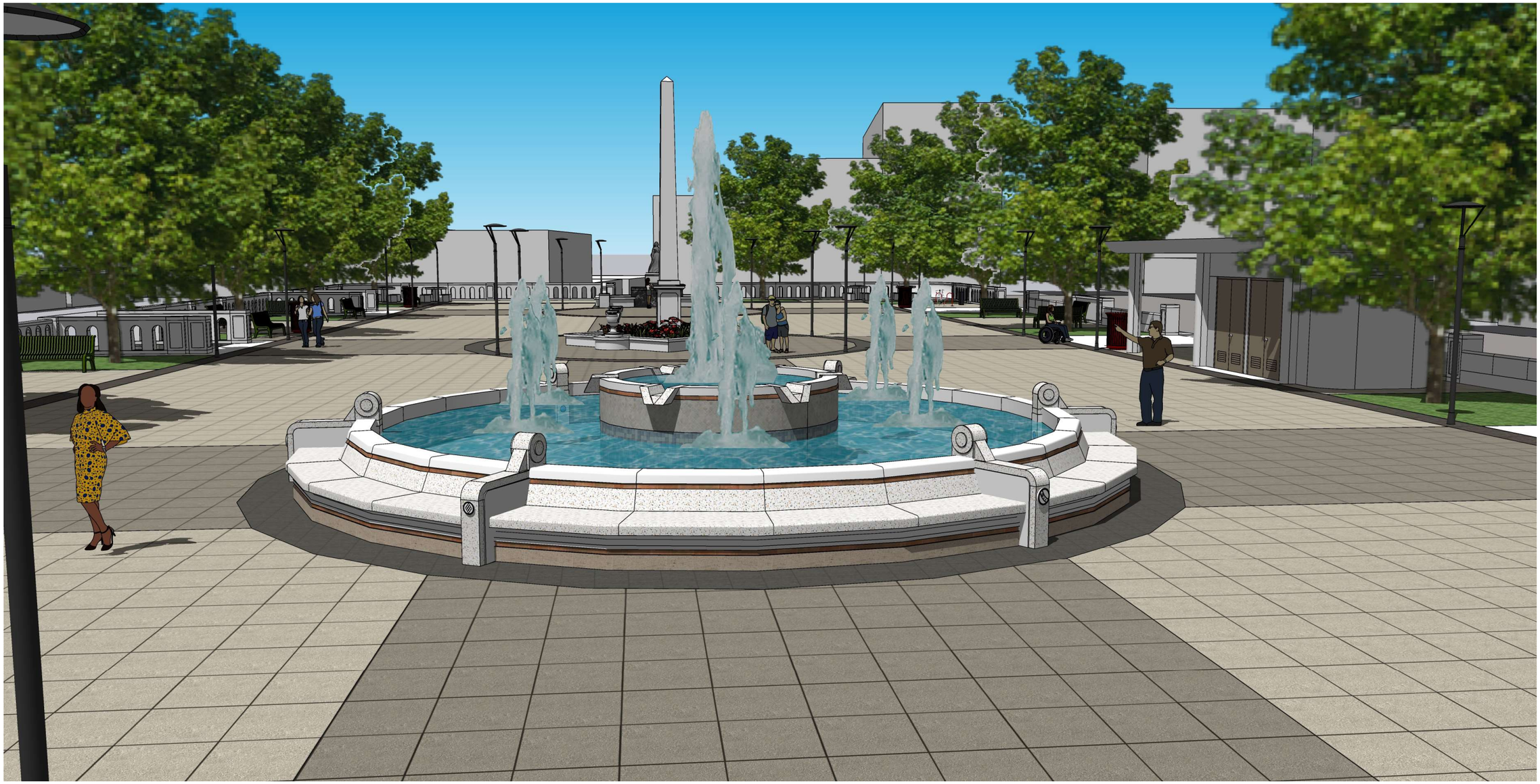

IVAPR.COM

REVITALIZATION OF LUIS MUÑOZ RIVERA PLAZA IN URBAN CENTER

BLOW-UP PERSPECTIVE VIEW LOOKING AT THE FOUNTAIN FROM THE EAST SIDE

PER-13

IVAPR.COM

REVITALIZATION OF LUIS MUÑOZ RIVERA
PLAZA IN URBAN CENTER

BLOW-UP PERSPECTIVE VIEW LOOKING AT THE
FOUNTAIN FROM THE WEST SIDE

PER-14

IVAPR.COM

REVITALIZATION OF LUIS MUÑOZ RIVERA PLAZA IN URBAN CENTER

BLOW-UP PERSPECTIVE VIEW LOOKING AT THE MECHANICAL BUILDING FROM THE SOUTH EAST SIDE

PER-15

IVAPR.COM

REVITALIZATION OF LUIS MUÑOZ RIVERA
PLAZA IN URBAN CENTER

BLOW-UP PERSPECTIVE VIEW LOOKING AT THE
OBELISK FROM THE EAST SIDE

PER-16

IVAPR.COM

REVITALIZATION OF LUIS MUÑOZ RIVERA PLAZA IN URBAN CENTER

BLOW-UP PERSPECTIVE VIEW LOOKING AT THE REINA ISABEL II FROM THE EAST SIDE

PER-17

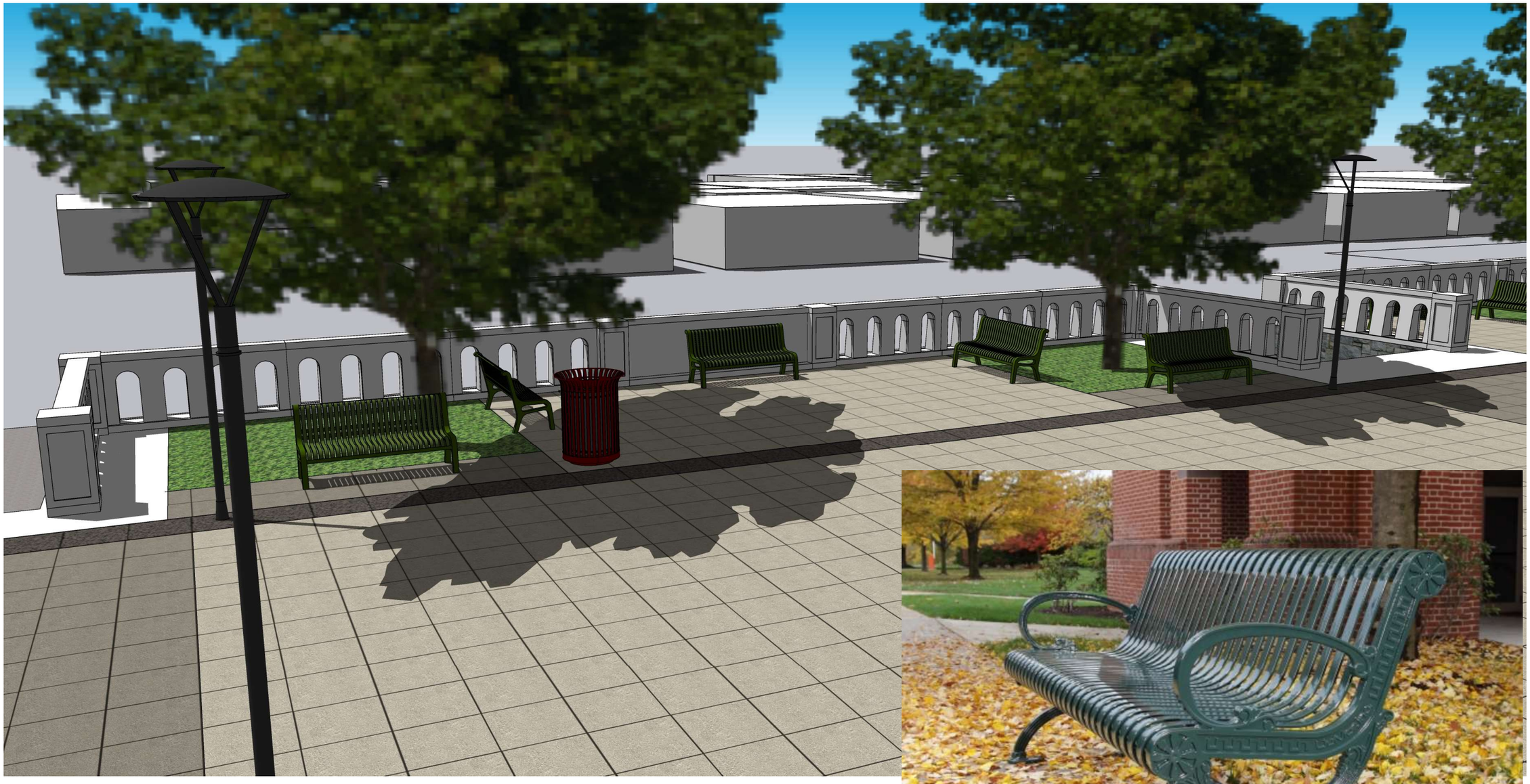

THE IMAGE AT RIGHT SHOWS THE STYLE OF BENCH PROPSED: 6 FEET LONG. A CENTRAL ARMREST WILL BE INCLUDED (NOT SHOWN) TO AVOID BENCHES BEING USED AS SLEEPING AREAS.

IVAPR.COM

REVITALIZATION OF LUIS MUÑOZ RIVERA PLAZA IN URBAN CENTER

BLOW-UP PERSPECTIVE VIEW LOOKING AT THE SHADED SEATING AREAS

PER-18

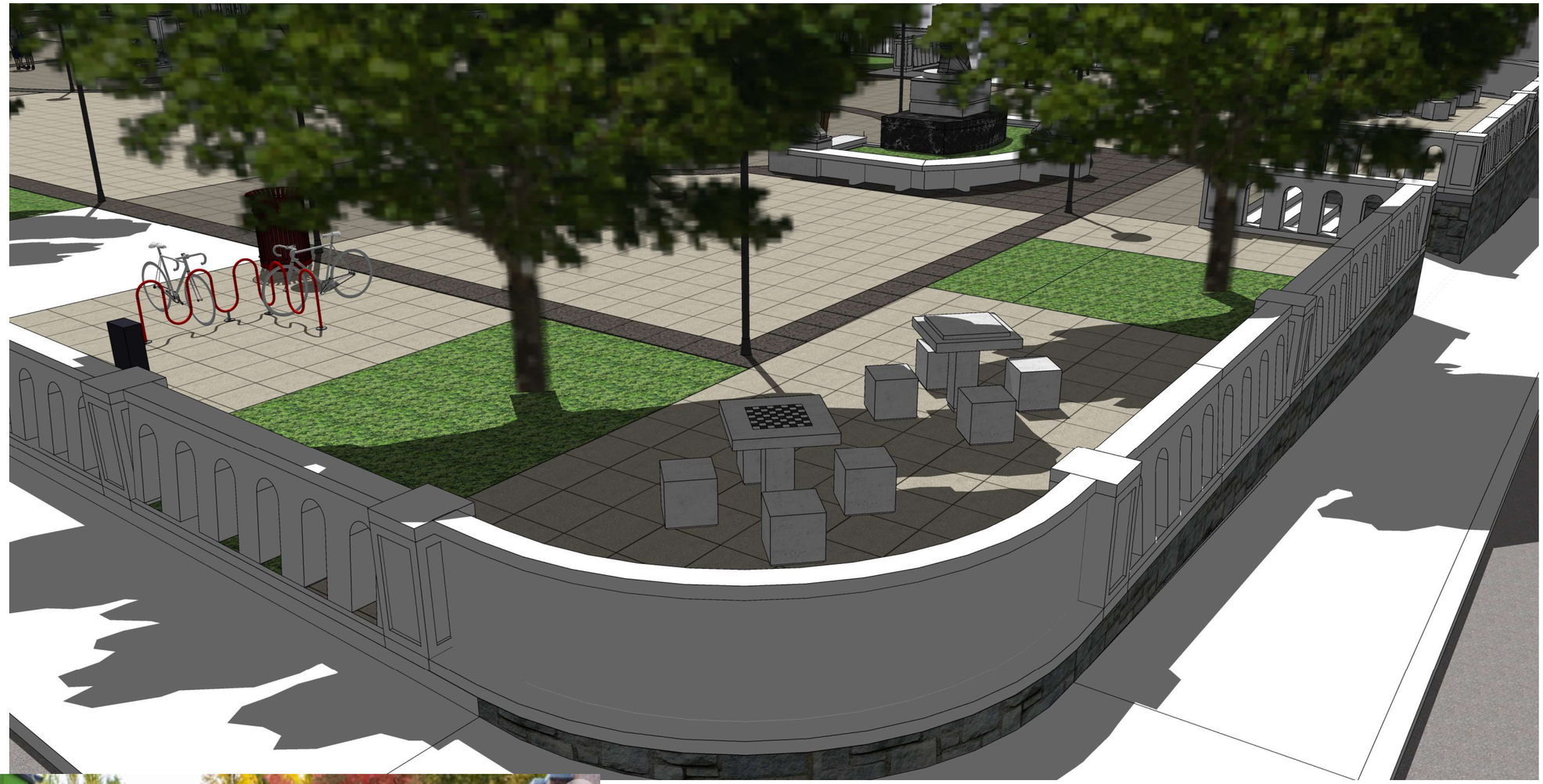

THE IMAGES AT LEFT SHOWS THE PROPOSED BICYCLE PARKING AREA EQUIPMENT: NO SCRATCH BIKE PARKING RACKS AND A DELUXE PUBLIC WORK STAND.

IVAPR.COM

REVITALIZATION OF LUIS MUÑOZ RIVERA PLAZA IN URBAN CENTER

BLOW-UP PERSPECTIVE VIEW LOOKING AT THE CHESS, DOMINO TABLES AND THE BYCICLE PARKING AREA

PER-19

PR-CRP-000771

Revitalization of Plaza Luis Muñoz Rivera in the Urban Center Project

Arecibo, Puerto Rico

Design Alternative 2

REVISED VERSION OF THE PROJECT TO COMPLY WITH REQUIREMENTS
OF SHPO AS AGREED IN LAST MEETING. DATE: DECEMBER, 2024.

NEW DOMINO AND CHESS TABLES WITH SEATS

BICYCLE RACKS

IMPROVED RAMP ENTRANCES

JOSE DE DIEGO AVE.

IMPROVED OBELISK PLANTING AREA

NEW FOUNTAIN

PALMA STREET

MARIA HOSTOS STREET

NEW LOCATION OF MECHANICAL / ELECTRICAL ROOM

GONZALO MARIN STREET

NEW PLANTING AREAS FOR EXISTING TREES

North

0 10 20 30'

ALTERNATE 2

IVAPR.COM

REVITALIZATION OF LUIS MUÑOZ RIVERA PLAZA IN URBAN CENTER

PLAN VIEW WITH LEGEND OF PROPOSED REVITALIZATION (FINAL)

IVAPR.COM

REVITALIZATION OF LUIS MUÑOZ RIVERA PLAZA IN URBAN CENTER

PERSPECTIVE VIEW OF PROPOSED REVITALIZATION
LOOKING FROM THE MORTHEAST

IVAPR.COM

REVITALIZATION OF LUIS MUÑOZ RIVERA PLAZA IN URBAN CENTER

PERSPECTIVE VIEW OF PROPOSED REVITALIZATION
LOOKING FROM THE SOUTHWEST

IVAPR.COM

REVITALIZATION OF LUIS MUÑOZ RIVERA PLAZA IN URBAN CENTER

PERSPECTIVE VIEW OF THE NEW PROPOSED
LOCATION OF MECHANICAL ROOM AS SEEN FROM
INSIDE THE PLAZA

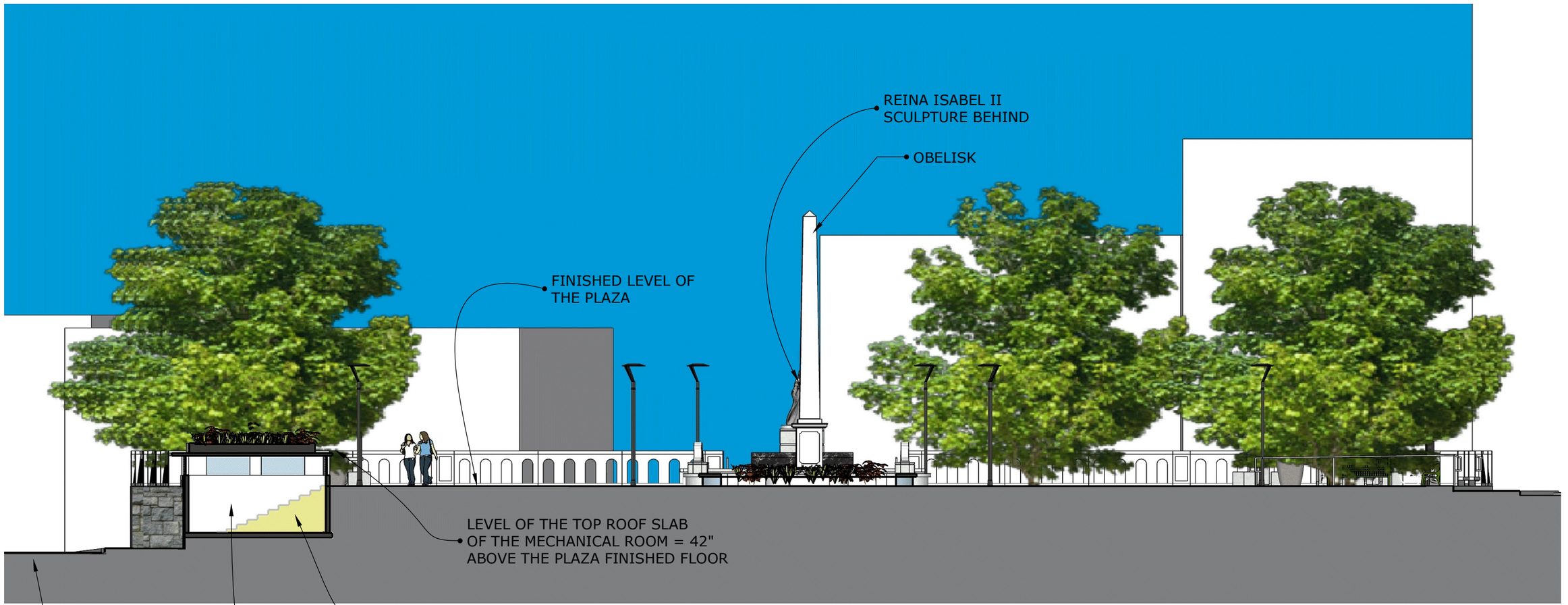

PLAZA SECTION THROUGH NEW MECHANICAL AND ELECTRICAL ROOM LOOKING WEST

IVAPR.COM

REVITALIZATION OF LUIS MUÑOZ RIVERA PLAZA IN URBAN CENTER

PERSPECTIVE VIEW OF PROPOSED REVITALIZATION
LOOKING FROM THE SOUTH WEST

PR-CRP-000771

Revitalization of Plaza Luis Muñoz Rivera in the Urban Center Project

Arecibo, Puerto Rico

Design Alternative 3

ALTERNATIVE 3 – RECOMMEMDED

Plaza Arecibo - ALTERNATIVA #3 (FINAL) para Cuarto Mecánico y Eléctrico.
Mirando desde el OESTE

PR-CRP-000771

Revitalization of Plaza Luis Muñoz Rivera in the Urban Center Project

Arecibo, Puerto Rico

Design Alternative 4

REVISED VERSION OF THE PROJECT TO COMPLY WITH REQUIREMENTS
OF SHPO AS AGREED IN LAST MEETING. DATE: DECEMBER, 2024.

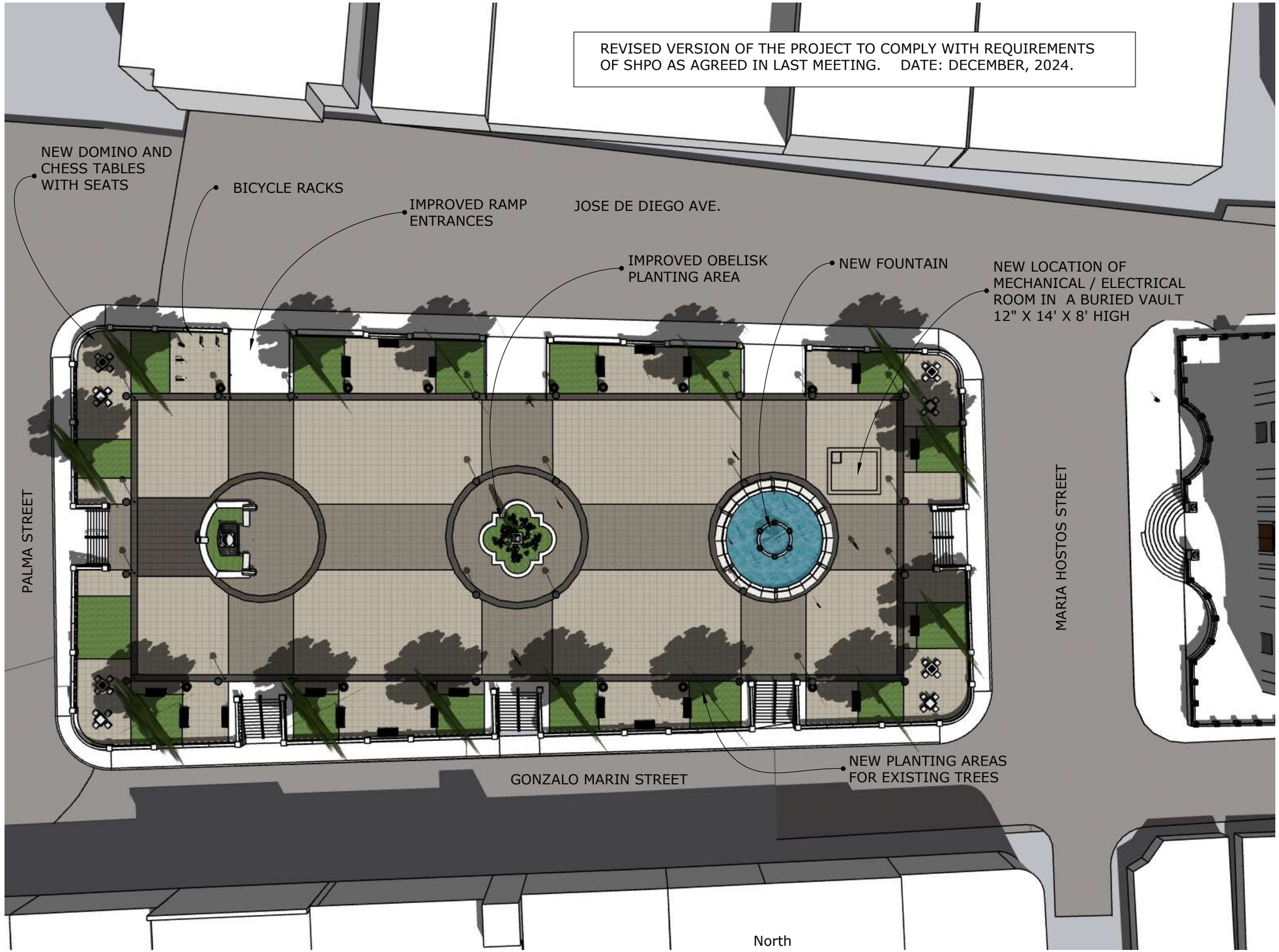

ALTERNATE 4

IVAPR.COM

REVITALIZATION OF LUIS MUÑOZ RIVERA PLAZA IN URBAN CENTER

PLAN VIEW WITH LEGEND OF PROPOSED REVITALIZATION (FINAL)

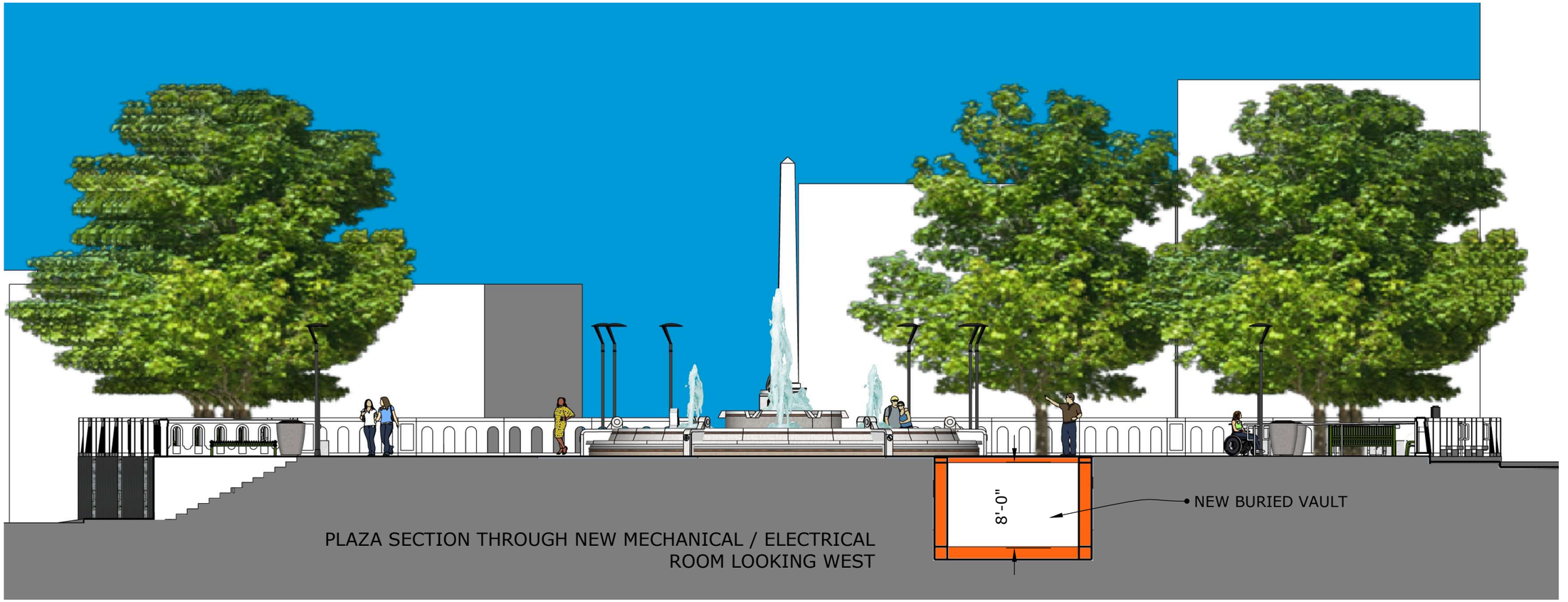

PLAZA SECTION THROUGH NEW MECHANICAL / ELECTRICAL ROOM LOOKING WEST

IVAPR.COM

REVITALIZATION OF LUIS MUÑOZ RIVERA PLAZA IN URBAN CENTER

PERSPECTIVE VIEWS AND SECTION OF ALTERNATE 3

Appendix N:
Sole Source Aquifers

PR-CRP-000771 Sole Source Aquifers Map

Address: Pueblo Ward, Arecibo, PR 00612
Coordinates: 18.471980°, -66.715910°

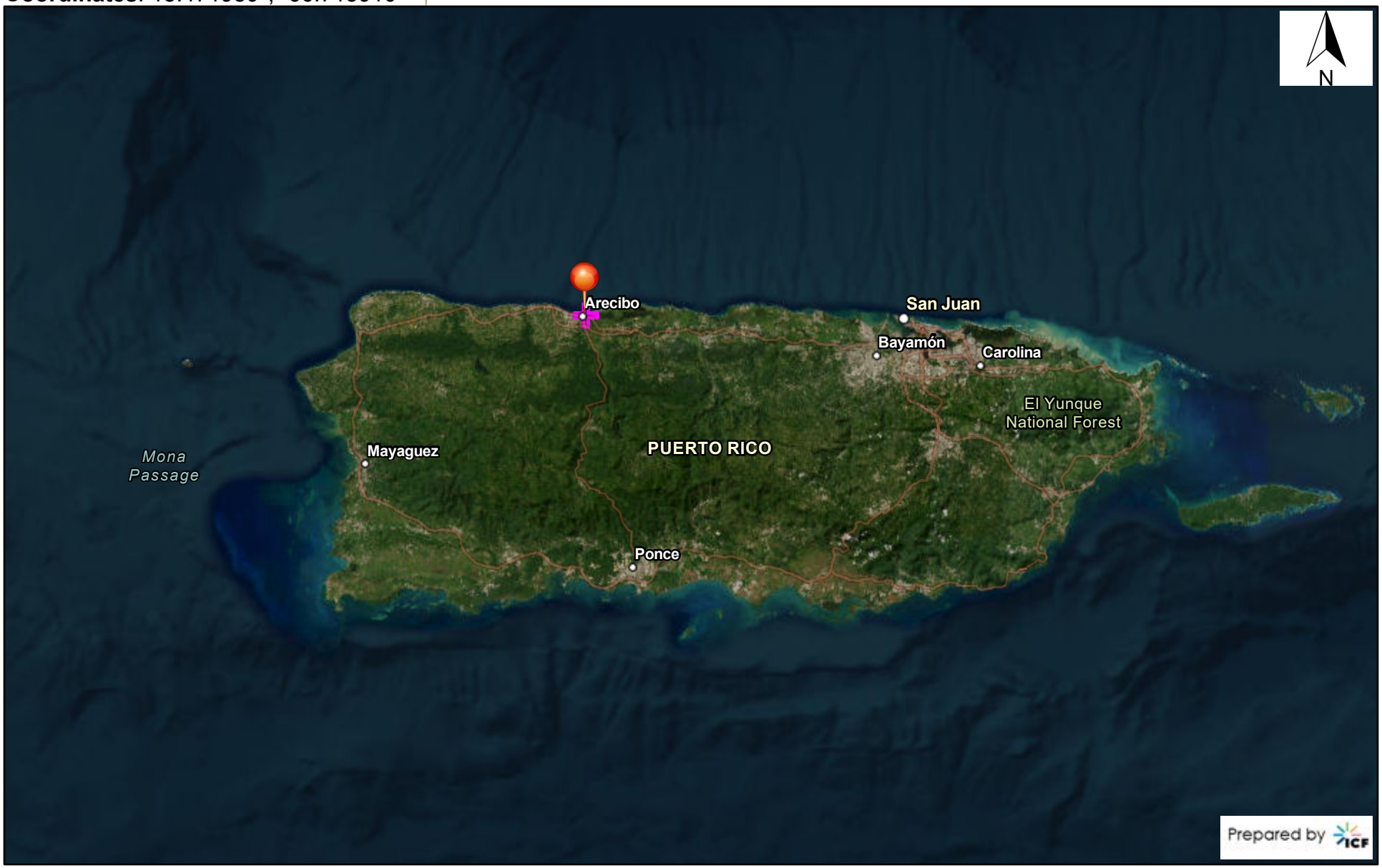

August 13, 2025

Search Result (point)

1:1,155,581

0 5 10 20 mi

0 15 30 60 km

Earthstar Geographics, Sources: Esri, TomTom, Garmin, FAO, NOAA, USGS, (c) OpenStreetMap contributors, and the GIS User Community

Source: https://nepassisttool.epa.gov/nepassist/nepamap.aspx

Appendix O:
Wetlands Protection

PR-CRP-000771 Wetlands Map

Address: Pueblo Ward, Arecibo, PR 00612
Coordinates: 18.471980°, -66.715910°

U.S. Fish and Wildlife Service
National Wetlands Inventory

August 13, 2025

Wetlands

- Estuarine and Marine Deepwater
- Estuarine and Marine Wetland
- Freshwater Emergent Wetland
- Freshwater Forested/Shrub Wetland
- Freshwater Pond
- Lake
- Other
- Riverine

Source: https://fwsprimary.wim.usgs.gov/wetlands/apps/wetlands-mapper/

This map is for general reference only. The US Fish and Wildlife Service is not responsible for the accuracy or currentness of the base data shown on this map. All wetlands related data should be used in accordance with the layer metadata found on the Wetlands Mapper web site.

Appendix P:
Wild and Scenic Rivers

PR-CRP-000771 Wild and Scenic Rivers Map

Address: Pueblo Ward, Arecibo, PR 00612
Coordinates: 18.471980°, -66.715910°

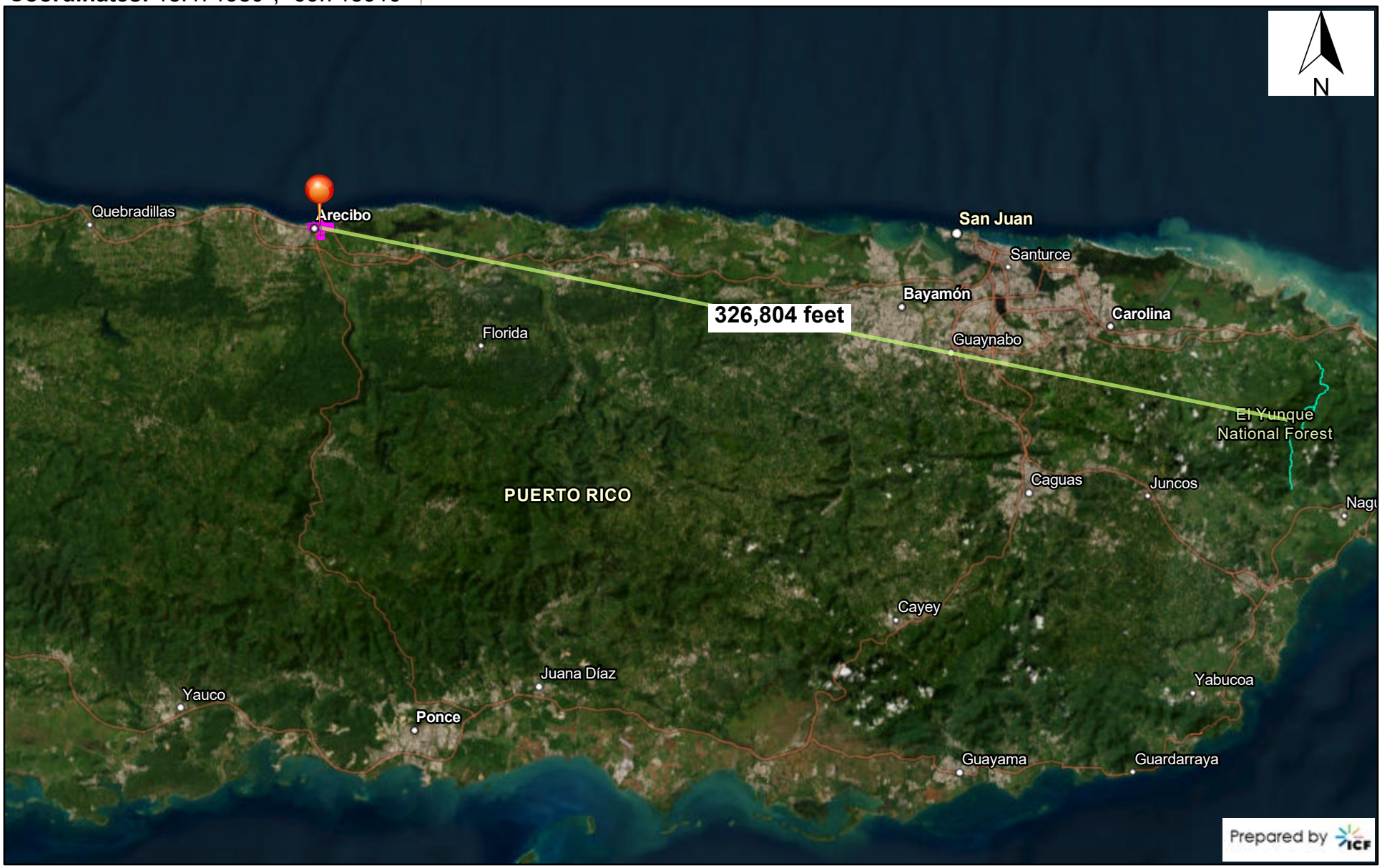

August 13, 2025

Search Result (point)

Wild and Scenic Rivers

1:577,791

0 4.75 9.5 19 mi

0 5 10 20 km

Earthstar Geographics, Sources: Esri, TomTom, Garmin, FAO, NOAA, USGS, (c) OpenStreetMap contributors, and the GIS User Community

Source: https://nepassisttool.epa.gov/nepassist/nepamap.aspx